# CONNECT WITH CONFIDENCE™

**CATALOG #58 EFFECTIVE OCTOBER 31, 2016**

2017

BANJO®
Liquid Handling Products

IDEX

# CONNECT WITH

## FEATURES

- Heavy-duty glass reinforced polypropylene.
- Clear or black polypropylene bowl.
- Polypropylene ribbed 316 stainless steel screens.
- EPDM gaskets standard.
- Convenient color coded screens for easy mesh size identification. (Refer to chart below)

| MINI T STRAINER | | | |
|---|---|---|---|
| PART NO | DESCRIPTION | MAX PSI | QTY |
| LSTM050-30 | ½" Mini T Strainer w/Black Bowl 30 Mesh | 200 | 1 |
| LSTM050-50 | ½" Mini T Strainer w/Black Bowl 50 Mesh | 200 | 1 |
| LSTM050-80 | ½" Mini T Strainer w/Black Bowl 80 Mesh | 200 | 1 |
| LSTM050-100 | ½" Mini T Strainer w/Black Bowl 100 Mesh | 200 | 1 |
| LSTM075-30 | ¾" Mini T Strainer w/Black Bowl 30 Mesh | 200 | 1 |
| LSTM075-50 | ¾" Mini T Strainer w/Black Bowl 50 Mesh | 200 | 1 |
| LSTM075-80 | ¾" Mini T Strainer w/Black Bowl 80 Mesh | 200 | 1 |
| LSTM075-100 | ¾" Mini T Strainer w/Black Bowl 80 Mesh | 200 | 1 |

| MINI T STRAINER W/CLEAR BOWLS | | | |
|---|---|---|---|
| PART NO | DESCRIPTION | MAX PSI | QTY |
| LSTM050-30C | ½" Mini T Strainer w/Clear Bowl 30 Mesh | 200 | 1 |
| LSTM050-50C | ½" Mini T Strainer w/Clear Bowl 50 Mesh | 200 | 1 |
| LSTM050-80C | ¾" Mini T Strainer w/Clear Bowl 80 Mesh | 200 | 1 |
| LSTM050-100C | ¾" Mini T Strainer w/Clear Bowl 100 Mesh | 200 | 1 |
| LSTM075-30C | ¾" Mini T Strainer w/Clear Bowl 30 Mesh | 200 | 1 |
| LSTM075-50C | ¾" Mini T Strainer w/Clear Bowl 50 Mesh | 200 | 1 |
| LSTM075-80C | ¾" Mini T Strainer w/Clear Bowl 80 Mesh | 200 | 1 |
| LSTM075-100C | ¾" Mini T Strainer w/Clear Bowl 80 Mesh | 200 | 1 |

| MANIFOLD MINI T STRAINERS | | | |
|---|---|---|---|
| PART NO | DESCRIPTION | MAX PSI | QTY |
| MLSTM100-30 | 1" Manifold Mini T Strainer 30 Mesh | 300 | 1 |
| MLSTM100-50 | 1" Manifold Mini T Strainer 50 Mesh | 300 | 1 |
| MLSTM100-80 | 1" Manifold Mini T Strainer 80 Mesh | 300 | 1 |
| MLSTM100-100 | 1" Manifold Mini T Strainer 100 Mesh | 300 | 1 |

| MANIFOLD MINI T STRAINER W/CLEAR BOWLS | | | |
|---|---|---|---|
| PART NO | DESCRIPTION | MAX PSI | QTY |
| MLSTM100-30C | 1" Manifold Mini T Strainer w/Clear Bowl 30 Mesh | 300 | 1 |
| MLSTM100-50C | 1" Manifold Mini T Strainer w/Clear Bowl 50 Mesh | 300 | 1 |
| MLSTM100-80C | 1" Manifold Mini T Strainer w/Clear Bowl 80 Mesh | 300 | 1 |
| MLSTM100-100C | 1" Manifold Mini T Strainer w/Clear Bowl 100 Mesh | 300 | 1 |

| SCREENS | |
|---|---|
| MESH SIZE | RIB COLOR |
| 30 MESH | FLAME RED |
| 50 MESH | GENETIAN BLUE |
| 80 MESH | ZINC YELLOW |
| 100 MESH | TRAFFIC GREEN |

## FEATURES

- Made of steel tube construction for stability.
- Powder coated finish for durablity.

| 2" PUMP ROLL CAGE | | |
|---|---|---|
| PART NO | DESCRIPTION | QTY |
| PRC200 | Pump Roll Cage fits all 2" Poly Pumps | 1 |

## FEATURES

- Stainless steel bolts.
- Glass reinforced polypropylene.
- All PTFE seals.

| DRY POPPET STUBBY VALVE | | | |
|---|---|---|---|
| PART NO | DESCRIPTION | MAX PSI | QTY |
| VSMT200DPC | 2" NPT x 1" Dry Poppet Stubby Valve | 100 | 1 |

# CONFIDENCE™

## FEATURES

- Durable cast iron construction.
- Dynamically balanced impeller.
- Replaceable inlet and outlet flanges.
- Graphite loaded silicon carbide sealwith stainless steel cup and spring with FKM (viton type) rubber.
- Pump end separated from engine.
- Large weep holes between pump end and engine.
- "V" Shaped for quicker priming.

**CAUTION-WARNING:** Please do not run pump dry, restrict or reduce port sizes, or dead head pump. This could cause component failure to pump.

**DO NOT USE WITH FLAMMABLE LIQUIDS.**

| 333 SERIES CAST IRON PUMP ONLY C-FACE ADAPTER | | | |
|---|---|---|---|
| PART NO | DESCRIPTION | HP | QTY |
| 333POICF | 3" Cast Iron Pump Only w/1 3/8" Shaft & 5 Vane Impeller Unassembled for 215TC Frame | N/A | 1 |

| 316 SS HOSE BARB THREADED TEE | | | |
|---|---|---|---|
| PART NO | DESCRIPTION | MAX PSI | QTY |
| HBT075-050SS | ¾" Hose Barb x ¾" Hose Barb x ½" Male Thread Hose Barb Tee | 300 | 1 |

## FEATURES

- One piece construction.
- 5 lb spring.
- Glass reinforced polypropylene.
- 316 stainless steel springs.
- EPDM gasket.

| CHECK VALVES | | | | |
|---|---|---|---|---|
| PART NO | DESCRIPTION | MAX PSI | PIPE SIZE | QTY |
| CV050 | ½" Check Valve | 300 | ½" | 1 |

## FEATURES

- 12 Volt DC operated.
- 3 Second per quarter turn cycle time.
- FKM (viton type) seals.
- PTFE self-lubricating stem bushings and seats cannot stick or bind.
- Precision molded in polypropylene. Polypropylene is reinforced with fiberglass for additional strength.
- Self-aligning ball moves freely against the PTFE seats for smooth operation. The valve opens and closes with very little pressure on the handle.
- Stainless steel ball and stem.

| MANIFOLD BOLTED 5 WAY ELECTRIC VALVE | | | | | |
|---|---|---|---|---|---|
| PART NO | DESCRIPTION | MAX PSI | PIPE SIZE | OPENING THRU BALL | QTY |
| MEV225CF | 2" Full Port Electric Flange 5 Way Valve | 300 | 2" | 2" | 1 |

# INDEX


VALVES

p. 5

PINCH VALVES

p.16

CHECK VALVES

p. 16

ELECTRIC VALVES

p. 17

MANIFOLD FLANGE CONNECTIONS

p. 26

PRESSURE RELIEF VALVES

p. 39

FLOW METERS

p. 42

BOOM NOZZLE PIPE ADAPTERS

p. 44

DRY-DISCONNECTS

p. 53

IBC/TANK ACCESSORIES

p. 62

CAM LEVER COUPLINGS

p. 72

GARDEN HOSE FITTINGS

p. 78

PIPE FITTINGS

p. 79

LINE STRAINERS

p. 85

PUMPS

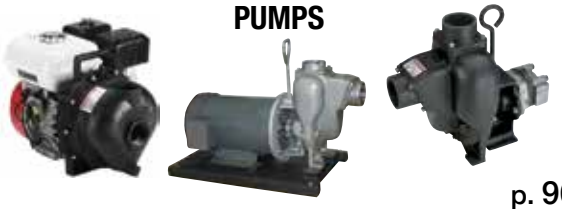

p. 96

# Polypropylene Micro Valves



## FEATURES

- 90° rotating handle.
- Precision molded polypropylene is reinforced with fiberglass for additional strength.
- Standard FKM (viton type) seats and O-rings.

LV050SLV

| POLY MICRO VALVES | | | | | |
|---|---|---|---|---|---|
| PART NO | DESCRIPTION | MAX PSI | THREAD SIZE | OPENING THRU BALL | QTY |
| LV025V | ¼" Female NPT Micro Valve | 300 | ¼" | ⅜" | 1 |
| LV038V | ⅜" Female NPT Micro Valve | 300 | ⅜" | ⅜" | 1 |
| LV050V | ½" Female NPT Micro Valve | 300 | ½" | 15/32" | 1 |
| LV050SLV | ½" Side Load Micro Valve | 300 | ½" | ½" | 1 |

| POLY MICRO VALVES | | | | | |
|---|---|---|---|---|---|
| PART NO | DESCRIPTION | MAX PSI | THREAD SIZE | OPENING THRU BALL | QTY |
| LVHB025V | ¼" Hose Barb Micro Valve | 300 | ¼" | ⅜" | 1 |
| LVHB038V | ⅜" Hose Barb Micro Valve | 300 | ⅜" | ⅜" | 1 |
| LVHB050V | ½" Hose Barb Micro Valve | 300 | ½" | ⅜" | 1 |
| LVHB075V | ¾" Hose Barb Micro Valve | 300 | ¾" | 15/32" | 1 |

John Guest Fitting

The brand "**John Guest**" is a registered trademark of John Guest International Limited.

| POLY MICRO VALVES | | | | | |
|---|---|---|---|---|---|
| PART NO | DESCRIPTION | MAX PSI | THREAD SIZE | OPENING THRU BALL | QTY |
| LVPL025V | ¼" Female Push Lock Micro Valve | 150 | ¼" | ⅜" | 1 |
| LVPL038V | ⅜" Female Push Lock Micro Valve | 150 | ⅜" | ⅜" | 1 |
| LVPL050V | ½" Female Push Lock Micro Valve | 150 | ½" | 15/32" | 1 |

LV038MTV

LV038050MTV

LV050100MTV

| POLY MICRO VALVES | | | | | |
|---|---|---|---|---|---|
| PART NO | DESCRIPTION | MAX PSI | THREAD SIZE | OPENING THRU BALL | QTY |
| LV025MTV | ¼" Female x Male NPT Micro Valve | 300 | ¼" | ⅜" | 1 |
| LV038MTV | ⅜" Female x Male NPT Micro Valve | 300 | ⅜" | ⅜" | 1 |
| LV038050MTV | ⅜" Female x ½" Male NPT Micro Valve | 300 | ⅜"x½" | ⅜" | 1 |
| LV050MTV | ½" Female x Male NPT Micro Valve | 300 | ½" | 15/32" | 1 |
| LV050100MTV | ½" Female x 1" Male NPT Micro Valve | 300 | ½" | 15/32" | 1 |

LVHB038050MTV

LVHB075MTV

LVHB075100MTV

| POLY MICRO VALVES | | | | | |
|---|---|---|---|---|---|
| PART NO | DESCRIPTION | MAX PSI | THREAD SIZE | OPENING THRU BALL | QTY |
| LVHB038050MTV | ⅜" Hose Barb x ½" Male NPT Micro Valve | 300 | ½" | ⅜" | 1 |
| LVHB075MTV | ¾" Hose Barb x ¾" Male NPT Micro Valve | 300 | ¾" | ½" | 1 |
| LVHB075100MTV | ¾" Hose Barb x 1" Male NPT Micro Valve | 300 | 1" | 15/32" | 1 |

MLV100V

| POLY MANIFOLD MICRO VALVES | | | | | |
|---|---|---|---|---|---|
| PART NO | DESCRIPTION | MAX PSI | FLANGE SIZE | OPENING THRU BALL | QTY |
| MLV100V | 1" Manifold Micro Valve | 300 | 1" | ½" | 1 |

# Polypropylene Bolted Ball Valves

## FEATURES

- FKM (viton type) seals.
- Precision molded polypropylene is reinforced with fiberglass for additional strength.
- Self-aligning ball moves freely against the PTFE seats for smooth operation. The valve opens and closes with very little pressure on the handle.
- Ball is diamond turned, after molding, to make it spherically perfect, which provides precise contact between ball and seats.
- PTFE self-lubricating stem bushings and seats cannot stick or bind.
- Stainless steel bolts.

| 4 BOLT VALVES | | | | | | | |
|---|---|---|---|---|---|---|---|
| PART NO | DESCRIPTION | MAX PSI | PIPE SIZE | OPENING THRU BALL | QTY | HANDLE REPLACEMENT | REPAIR KIT |
| V050 | ½" Full Port Valve | 300 | ½" | ¾" | 24/box | V10153A | V07200 |
| V075 | ¾" Full Port Valve | 300 | ¾" | ¾" | 24/box | V10153A | V07200 |
| V100 | 1" Standard Port Valve | 225 | 1" | ¾" | 24/box | V10153A | V07200 |
| V100FP | 1" Full Port Valve | 300 | 1" | 1" | 24/box | V10153A | V10200 |
| V125 | 1¼" Standard Port Valve | 300 | 1¼" | 1" | 24/box | V10153A | V10200 |
| V125FP | 1¼" Full Port Valve | 225 | 1¼" | 1½" | 24/box | V20153 | V20200 |
| V150 | 1½" Full Port Valve | 225 | 1½" | 1½" | 24/box | V20153 | V20200 |
| V200 | 2" Standard Port Valve | 225 | 2" | 1½" | 24/box | V20153 | V20200 |

**For *faster* shipping, order in box quantities.**

| VALVE REPAIR KIT INCLUDES: | | |
|---|---|---|
| 1 Ball | 2 Body O-Rings | 1 Thrust Washer |
| 2 Ball Seats | 1 Upper Stem Bushing | 1 Stem O-Ring |

## FEATURES FOR LOCKING DEVICE

- 304 Stainless steel construction.
- Installs under valve handle.
- Comes complete with handle and locking device.
- Padlock not included*

VL20153

| LOCKING DEVICE | | | |
|---|---|---|---|
| PART NO | DESCRIPTION | VALVE USED | QTY |
| VL20153 | Locking Device | V125FP, V150 & V200 | 1 |

## FEATURES FOR MOUNTING BRACKETS

- 316 Stainless steel construction.
- Straight and 90° available.

| MOUNTING BRACKETS | | | |
|---|---|---|---|
| PART NO | DESCRIPTION | VALVE USED | QTY |
| V10270 | Straight Mounting Bracket | V100FP & V125 | 1 |
| V10271 | 90° Mounting Bracket | V100FP & V125 | 1 |
| V25270 | Straight Mounting Bracket | V125FP, V150 & V200 | 1 |
| V25271 | 90° Mounting Bracket | V125FP, V150 & V200 | 1 |

| HANDLE RISERS | | | |
|---|---|---|---|
| PART NO | DESCRIPTION | VALVE USED | QTY |
| V10153138BL | 1" x 1⅜" Handle Offset | V075BL & V100BL | 1 |
| V10153138 | 1" x 1⅜" Handle Offset | V100FP, V125, V075SL & V100SL | 1 |
| V20153138BL | 2" x 1⅜" Handle Offset | MV200BL, V125BL & V150BL | 1 |
| V20153138 | 2" x 1⅜" Handle Offset | V125FP, V150, V200 V125SL, V150SL | 1 |
| V25153138BL | 2" FP x 1⅜" Handle Offset | MV220BL & MV300BL | 1 |
| V25153138 | 2" FP x 1⅜" Handle Offset | V200FP & V200SL | 1 |

# Polypropylene Bolted Ball Valves



## FEATURES

- FKM (viton type) seals.
- PTFE self-lubricating stem bushings and seats cannot stick or bind.
- Precision molded in polypropylene.
- Polypropylene is reinforced with fiberglass for additional strength.
- Self-aligning ball moves freely against the PTFE seats for smooth operation.
- Valve opens and closes with very little pressure on the handle.
- Ball is diamond turned, after molding, to make it spherically perfect, which provides precise contact between ball and seats.
- Stainless steel bolts.

| 6 BOLT VALVES | | | | | | | |
|---|---|---|---|---|---|---|---|
| PART NO | DESCRIPTION | MAX PSI | PIPE SIZE | OPENING THRU BALL | QTY | HANDLE REPLACEMENT | REPAIR KIT |
| V200FP | 2" Full Port Valve | 225 | 2" | 2" | 8/box | V25153 | V25200 |
| V300 | 3" Standard Port Valve | 225 | 3" | 2½" | 8/box | V25153 | V30200 |
| V300FP | 3" Full Port Valve | 200 | 3" | 3" | 6/box | V25153 | V35200 |
| V400 | 4" Standard Port Valve | 100 | 4" | 3½" | 4/box | V25153 | V40200 |

**For *faster* shipping, order in box quantities.**

VFMT200FP

VALVE REPAIR KIT INCLUDES:
1 Ball 2 Body O-Rings 1 Thrust Washer
2 Ball Seats 1 Upper Stem Bushing 1 Stem O-Ring

| 6 BOLT VALVES w/ "F" ADAPTER | | | | | | | |
|---|---|---|---|---|---|---|---|
| PART NO | DESCRIPTION | MAX PSI | PIPE SIZE | OPENING THRU BALL | QTY | HANDLE REPLACEMENT | REPAIR KIT |
| VFMT200FP | 2" Full Port Valve w/"F" Adapter | 225 | 2" | 2" | 6/box | V25153 | V25200 |

## FEATURES FOR MOUNTING BRACKETS

- 316 Stainless steel construction.
- Straight and 90° available.

V25270

V25271

| MOUNTING BRACKETS | | | |
|---|---|---|---|
| PART NO | DESCRIPTION | VALVE USED | QTY |
| V25270 | Straight Mounting Bracket | V200FP, V300, V300FP, V400 VFMT200FP & VFMT200FPSH | 1 |
| V25271 | 90° Mounting Bracket | V200FP, V300, V300FP, V400 VFMT200FP & VFMT200FPSH | 1 |

## FEATURES FOR LOCKING HANDLE

- Stainless steel hardware.
- Locks in open and closed positions.
- Locking handle replaces standard handle.**
- Padlock not included.*

VL25153

| LOCKING HANDLE FEATURES | | | |
|---|---|---|---|
| PART NO | DESCRIPTION | VALVE USED | QTY |
| VL25153 | Locking Handle | V200FP, V300, V300FP, V400 VFMT200FP & VFMT200FPSH | 1 |

**Sold separately.

# 2" Full Port Polypropylene Bolted Ball Valves

## FEATURES

- FKM (viton type) seals.
- Stainless steel bolts.
- PTFE self-lubricating stem bushings and seats cannot stick or bind.
- Precision molded in polypropylene.
- Polypropylene is reinforced with fiberglass for additional strength.
- Self-aligning ball moves freely against the PTFE seats for smooth operation.
- Valve opens and closes with very little pressure on the handle.
- Ball is diamond turned, after molding, to make it spherically perfect, which provides precise contact between ball and seats.

| 4 BOLT FULL PORT VALVES | | | | | | | |
|---|---|---|---|---|---|---|---|
| PART NO | DESCRIPTION | MAX PSI | PIPE SIZE | OPENING THRU BALL | QTY | HANDLE REPLACEMENT | REPAIR KIT |
| VFMT204FP | 2" Full Port Valve Male NPT x Male Adapter | 150 | 2" | 2" | 6/box | V25153 | V25200 |
| V204FP | 2" Full Port Valve | 150 | 2" | 2" | 8/box | V25153 | VS2500 |

**For *faster* shipping, order in box quantities.**

# 2" Full Port ANSI Flange Bolted Ball Valves

## FEATURES

- 100% PTFE seats.
- FKM (viton type) seals.
- Glass-filled polypropylene.
- Unique compact design.
- Lightweight.

See our 2" ANSI flange gaskets on page 71!

| FULL PORT ANSI FLANGE VALVES | | | | | | | |
|---|---|---|---|---|---|---|---|
| PART NO | DESCRIPTION | MAX PSI | PIPE SIZE | OPENING THRU BALL | QTY | HANDLE REPLACEMENT | REPAIR KIT |
| VSF200FPAF | 2" Full Port Valve Male Adapter x 2" ANSI Flange | 200 | 2" | 2" | 6/box | V25153SH | VS25200 |
| VSMT200FPAF | 2" Full Port Valve Male NPT x 2" ANSI Flange | 200 | 2" | 2" | 6/box | V25153SH | VS25200 |

# 2" Standard Port Stubby Ball Valves



## FEATURES

- Stainless steel bolts.
- Glass reinforced polypropylene.
- Multiple design options.
- Unique patented compact design.
- Lightweight.
- All PTFE seals

VSF200

VSMT200

VSFMT200

VSFHB200

| 2" STANDARD PORT STUBBY VALVES | | | | | | | |
|---|---|---|---|---|---|---|---|
| PART NO | DESCRIPTION | MAX PSI | PIPE SIZE | OPENING THRU BALL | QTY | HANDLE REPLACEMENT | REPAIR KIT |
| VSF200 | 2" Male Adapter x 2" Female NPT | 100 | 2" | 1½" | 24/box | VS20152SH | VS20200 |
| VSMT200 | 2" Male NPT x 2" Female NPT | 100 | 2" | 1½" | 24/box | VS20152SH | VS20200 |
| VSFMT200 | 2" Male Adapter x 2" Male NPT | 225 | 2" | 1½" | 24/box | VS20152SH | VS20200 |
| VSFHB200 | 2" Male Adapter x 2" Hose Barb | 100 | 2" | 1½" | 24/box | VS20152SH | VS20200 |

**For *faster* shipping, order in box quantities.**

VALVE REPAIR KIT INCLUDES:

| | | |
|---|---|---|
| 1 Ball | 1 Body Gasket | 1 Thrust Washer |
| 2 Ball Seats | 1 Upper Stem Bushing | 1 Stem O-Ring |

# 2" Full Port Stubby Ball Valves

**FEATURES**
- Stainless steel bolts.
- 100% PTFE ball seats.
- Glass-filled polypropylene.
- FKM (viton type) body seals.
- Unique compact design.
- Lightweight.

VSMT204FP

VSF204FP

VS204FP

VSFMT204FP

VSFMT204HSFP

**For *faster* shipping, order in box quantities.**

| 2" FULL PORT STUBBY VALVES | | | | | | | |
|---|---|---|---|---|---|---|---|
| PART NO | DESCRIPTION | MAX PSI | PIPE SIZE | OPENING THRU BALL | QTY | HANDLE REPLACEMENT | REPAIR KIT |
| VSMT204FP | 2" Male NPT x 2" Female NPT | 200 | 2" | 2" | 18/box | VS25153 | VS25200 |
| VSF204FP | 2" Male Adapter x 2" Female NPT | 100 | 2" | 2" | 18/box | VS25153 | VS25200 |
| VS204FP | 2" Female NPT x 2" Female NPT | 225 | 2" | 2" | 18/box | VS25153 | VS25200 |
| VSFMT204FP | 2" Male Adapter x 2" Male NPT | 150 | 2" | 2" | 18/box | VS25153 | VS25200 |
| VSFMT204HSFP | 2" FP Male Adapter x 2" Male NPT w/ SS Ball, Stem & Handle | 150 | 2" | 2" | 18/box | VS25153SS | VSSH25200 |

# 3" Standard Port Stubby Ball Valves



## FEATURES

- Stainless steel bolts.
- Glass reinforced polypropylene.
- FKM (viton type) body seals.
- Unique patented compact design.
- Lightweight.
- All PTFE ball seats.

VSMT300

VSF300

VSFMT300

| 3" STANDARD PORT STUBBY VALVES | | | | | | | | |
|---|---|---|---|---|---|---|---|---|
| PART NO | DESCRIPTION | MAX PSI | PIPE SIZE | OPENING THRU BALL | QTY | REPLACEMENT STRAIGHT HAN-DLE | REPLACMENT SHORT HANDLE | REPAIR KIT |
| VSMT300 | 3" Female NPT x 3" Male NPT | 225 | 3" | 2½" | 6/box | V25153 | V25153SH | VS30200 |
| VSF300 | 3" Female NPT x 3" Male Adapter | 100 | 3" | 2½" | 6/box | V25153 | V25153SH | VS30200 |
| VSFMT300 | 3" Male NPT x 3" Male Adapter | 100 | 3" | 2½" | 6/box | V25153 | V25153SH | VS30200 |

VALVE REPAIR KIT INCLUDES:

1 Ball 2 Body O-Rings 1 Thrust Washer
2 Ball Seats 1 Upper Stem Bushing 1 Stem O-Ring

**For *faster* shipping, order in box quantities.**

# 3" Full Port Stubby Ball Valves

## FEATURES

- Stainless steel bolts.
- Glass reinforced polypropylene.
- FKM (viton type) body seals.
- Unique patented compact design.
- Lightweight.
- All PTFE ball seats.

VSFMT300FP

| 3" FULL PORT PORT STUBBY VALVES | | | | | | | |
|---|---|---|---|---|---|---|---|
| PART NO | DESCRIPTION | MAX PSI | PIPE SIZE | OPENING THRU BALL | QTY | HANDLE REPLACEMENT | REPAIR KIT |
| VSFMT300FP | 3" FP Male Adapter x 3" Male NPT | 100 | 3" | 3" | 6/box | V25153 | VS35200 |

VSFMT300HSFP

| 3" FULL PORT STUBBY VALVES w/SS | | | | | | | |
|---|---|---|---|---|---|---|---|
| PART NO | DESCRIPTION | MAX PSI | PIPE SIZE | OPENING THRU BALL | QTY | HANDLE REPLACEMENT | REPAIR KIT |
| VSFMT300HSFP | 3" FP Male Adapter x 3" Male NPT w/SS ball, Stem & Handle | 100 | 3" | 3" | 6/box | VS30153SS | VSSH35200 |

VALVE REPAIR KIT INCLUDES:

1 Ball 2 Body O-Rings 1 Thrust Washer
2 Ball Seats 1 Upper Stem Bushing 1 Stem O-Ring

**For *faster* shipping, order in box quantities.**

# 3-Way Poly Ball Valves



**FEATURES**

- Stainless steel bolts.
- Precision molded in polypropylene. Polypropylene is reinforced with fiberglass for additional strength.
- Self-aligning ball moves freely against the PTFE seats for smooth operation.
- Ball is diamond turned, after molding, to make it spherically perfect, which provides precise contact between ball and seats.
- PTFE self-lubricating stem bushings and seats.
- FKM (viton type) body seals.

V075BL
V100BL

V125BL
V150BL

V200BL

| 3 WAY BOTTOM LOAD VALVES | | | | | | | | |
|---|---|---|---|---|---|---|---|---|
| PART NO | DESCRIPTION | MAX PSI | PIPE SIZE | OPENING THRU BALL | HANDLE TYPE | QTY | HANDLE REPLACEMENT | REPAIR KIT |
| V075BL | ¾" 3-Way Bottom Load Poly Valve | 200 | ¾" | 1" | T | 18/box | V10353TB | V10300SL |
| V100BL | 1" 3-Way Bottom Load Poly Valve | 225 | 1" | 1" | T | 18/box | V10353TB | V10300SL |
| V125BL | 1¼" 3-Way Bottom Load Poly Valve | 300 | 1¼" | 1½" | T | 12/box | V10353TB | V15300SL |
| V150BL | 1½" 3-Way Bottom Load Poly Valve | 225 | 1½" | 1½" | T | 12/box | V10353TB | V15300SL |
| V200BL | 2" 3-Way Bottom Load Poly Valve | 200 | 2" | 2" | Straight | 8/box | V25353B | V15300SL |

**BOTTOM LOAD:** Directional flow, right or left. Valve can be turned off to stop flow.

V075SL
V100SL

V125SL
V150SL

V200SL

| 3 WAY SIDE LOAD VALVES | | | | | | | | |
|---|---|---|---|---|---|---|---|---|
| PART NO | DESCRIPTION | MAX PSI | PIPE SIZE | OPENING THRU BALL | HANDLE TYPE | QTY | HANDLE REPLACEMENT | REPAIR KIT |
| V075SL | ¾" 3-Way Side Load Poly Valve | 200 | ¾" | 1" | Straight | 18/box | V10153A | V10300SL |
| V100SL | 1" 3-Way Side Load Poly Valve | 200 | 1" | 1" | Straight | 18/box | V10153A | V10300SL |
| V125SL | 1¼" 3-Way Side Load Poly Valve | 300 | 1¼" | 1½" | T | 12/box | V20153 | V15300SL |
| V150SL | 1½" 3-Way Side Load Poly Valve | 225 | 1½" | 1½" | T | 12/box | V20153 | V15300SL |
| V200SL | 2" 3-Way Side Load Poly Valve | 225 | 2" | 2" | Straight | 8/box | V25153SH | V15300SL |

**SIDE LOAD:** Directional flow, right or left. Valve cannot be turned off.

**For *faster* shipping, order in box quantities.**

# Polypropylene Nozzle Valves

## FEATURES

- Lightweight hose end valve for convenient transfer of liquids into drums, tanks, etc.
- Angled end flange with 8" long polypropylene fill spout.
- All stainless bolts.

| 1½" & 2" POLY NOZZLE VALVES W/90° ELBOW | | | | | | | | |
|---|---|---|---|---|---|---|---|---|
| PART NO | DESCRIPTION | MAX PSI | PIPE SIZE | OPENING THRU BALL | FEMALE NPT | QTY | HANDLE REPLACEMENT | REPAIR KIT |
| VA150 | 1½" Nozzle Valve w/90° Elbow | 225 | 1½"x 8" | 1½" | 1½" | 12/box | V20152 | V20200 |
| VA200 | 2" Nozzle Valve w/90° Elbow | 200 | 2" x 8" | 1½" | 2" | 12/box | V20152 | V20200 |
| VA200FP | 2" FP Nozzle Valve w/90° Elbow | 225 | 2" x 8" | 2" | 2" | 6/box | V25152 | V25200 |

**For use with V100, V100FP, UV100FP & SUV100FP**

| 1" POLY DISPENSING NOZZLE | | | | | | |
|---|---|---|---|---|---|---|
| PART NO | DESCRIPTION | MAX PSI | PIPE SIZE | OPENING THRU BALL | FEMALE NPT | QTY |
| V10161 | 1" Poly Nozzle Pipe | N/A | 1" | N/A | 1" | 1 |

*Note: Now sold separately.

# Poly Dispensing Nozzle

## FEATURES

- Glass reinforced polypropylene.
- 304 stainless steel handle, spring and pin.
- FKM (viton type) rubber parts **only.**
- Resists corrosion.

| 1" POLY DISPENSING NOZZLE | | | | | | | | |
|---|---|---|---|---|---|---|---|---|
| PART NO | DESCRIPTION | MAX PSI | PIPE SIZE | OPENING THRU BALL | FEMALE NPT | QTY | HANDLE REPLACEMENT | REPAIR KIT |
| VN100 | 1" Poly Dispensing Nozzle | 150 | 1" | N/A | 1" | 1 | VN10253 | VN10200 |

VALVE REPAIR KIT INCLUDES:
1 Ball 2 Body O-Rings 1 Thrust Washer
2 Ball Seats 1 Upper Stem Bushing 1 Stem O-Ring

# Single Union Polypropylene Ball Valve



## FEATURES

- Precision molded in glass reinforced polypropylene, for strength and chemical resistance.
- PTFE seats for smooth operation and proper sealing characteristics.
- EPDM O-rings to handle most fertilizers and many chemicals.
- Double O-rings in stem area for extra sealing protection.
- Interlocking body and end plate to allow easy thread connection when installing valves.

| SINGLE UNION SPINWELD POLY VALVES | | | | | |
|---|---|---|---|---|---|
| PART NO | DESCRIPTION | MAX PSI | PIPE SIZE | OPENING THRU BALL | QTY |
| SUV050FP | ½" Full Port Union Valve | 300 | ½" | ½" | 1 |
| SUV075FP | ¾" Full Port Union Valve | 300 | ¾" | ¾" | 1 |
| SUV100FP | 1" Full Port Union Valve | 300 | 1" | 1" | 1 |
| SUV125FP | 1¼" Full Port Union Valve | 300 | 1¼" | 1¼" | 1 |
| SUV150FP | 1½" Full Port Union Valve | 300 | 1½" | 1½" | 1 |
| SUV200FP | 2" Full Port Union Valve | 200 | 2" | 2" | 1 |

| MANIFOLD SINGLE UNION POLY VALVE | | | | | |
|---|---|---|---|---|---|
| PART NO | DESCRIPTION | MAX PSI | PIPE SIZE | OPENING THRU BALL | QTY |
| MSUV100FP | 1" Manifold Full Port Union Valve | 300 | 1" | 1" | 1 |



# Single Union Polypropylene Ball Valve

## FEATURES

- Precision molded in glass reinforced polypropylene, for strength and chemical resistance.
- PTFE seats for smooth operation and proper sealing characteristics.
- Double O-rings in stem area for extra sealing protection.
- Interlocking body and end plate to allow easy thread connection when installing.

| SINGLE UNION POLY VALVES | | | | | | |
|---|---|---|---|---|---|---|
| PART NO | DESCRIPTION | STEM O-RING | MAX PSI | PIPE SIZE | OPENING THRU BALL | QTY |
| UV050FP | ½" Single Union Poly Valve | EPDM | 300 | ½" | ¾" | 1 |
| UV075FP | ¾" Single Union Poly Valve | EPDM | 300 | ¾" | ¾" | 1 |
| UV100FP | 1" Single Union Poly Valve | EPDM | 300 | 1" | 1" | 1 |
| UV125FP | 1¼" Single Union Poly Valve | EPDM | 225 | 1¼" | 1½" | 1 |
| UV150FP | 1½" Single Union Poly Valve | EPDM | 200 | 1½" | 1½" | 1 |
| UV200FP | 2" Single Union Poly Valve | EPDM | 300 | 2" | 2" | 1 |

# Polypropylene Check Valve

## FEATURES

- One piece construction.
- Glass reinforced polypropylene.
- 316 stainless steel springs.
- EPDM gasket.

| CHECK VALVES | | | | |
|---|---|---|---|---|
| PART NO | DESCRIPTION | MAX PSI | PIPE SIZE | QTY |
| CV050 | ½" Check Valve | 300 | ½" | 1 |
| CV100MT | 1" Male x Female NPT | 300 | 1" | 1 |
| CV100 | 1" Check Valve | 300 | 1" | 1 |
| CV221 | 2" Full Port Check Valve | 300 | 2" | 1 |
| CV300 | 3" Full Port Check Valve | 300 | 3" | 1 |

See page 44 for our manifold version.

# 316 Stainless Steel Two Piece Ball Valves

## FEATURES

- 316 stainless steel.
- Blow out proof stem.
- All valves 100% tested by air, underwater at 100 P.S.I. in open and closed positions.
- Latch locking handle performs in both open and closed positions.
- Mounting pad.
- PTFE seals and seats.
- All full port design.

| 316 SS FULL PORT BALL VALVES | | | | | | | |
|---|---|---|---|---|---|---|---|
| PART NO | DESCRIPTION | HANDLE TYPE | MAX PSI | PIPE SIZE | OPENING THRU BALL | QTY | REPAIR KIT |
| VSS025 | ¼" SS Full Port Ball Valve | Straight | 1000 | ¼" | ¼" | 1 | VSS02500 |
| VSS038 | ⅜" SS Full Port Ball Valve | Straight | 1000 | ⅜" | ⅜" | 1 | VSS02500 |
| VSS050 | ½" SS Full Port Ball Valve | Straight | 1000 | ½" | ½" | 1 | VSS05200 |
| VSS075 | ¾" SS Full Port Ball Valve | Straight | 1000 | ¾" | ¾" | 1 | VSS07200 |
| VSS100 | 1" SS Full Port Ball Valve | Straight | 1000 | 1" | 1" | 1 | VSS10200 |
| VSS125 | 1¼" SS Full Port Ball Valve | Straight | 1000 | 1¼" | 1¼" | 1 | VSS12500 |
| VSS150 | 1½" SS Full Port Ball Valve | Straight | 1000 | 1½" | 1½" | 1 | VSS15200 |
| VSS200 | 2" SS Full Port Ball Valve | Straight | 1000 | 2" | 2" | 1 | VSS25200 |
| VSS300 | 3" SS Full Port Ball Valve | Straight | 1000 | 3" | 3" | 1 | VSS35200 |

# Poly Air Actuated Shutoff Valves

## FEATURES

- Open position allows full, unobstructed flow, 50-60 GPM.
- Air pressure collapses the internal rubber sleeve to provide positive shut off.
- Standard EPDM rubber bladder seal, FKM (viton type) available.
- Female NPT Threads.

| POLY PINCH VALVES | | | | | | |
|---|---|---|---|---|---|---|
| PART NO | DESCRIPTION | GASKET | MAX PSI | PIPE SIZE | PRESSURE DIFFERENCE | QTY |
| PV075 | ¾"x¾" Poly Pinch Valve | EPDM | 300 | ¾" | 15 to 20 PSI | 1 |
| PV075V | ¾" Poly Pinch Valve | FKM | 300 | ¾" | 15 to 20 PSI | 1 |
| PV100 | 1" x 1" Poly Pinch Valve | EPDM | 300 | 1" | 15 to 20 PSI | 1 |
| PV100V | 1" x 1" Poly Pinch Valve | FKM | 300 | 1" | 15 to 20 PSI | 1 |
| PV100-075 | 1" x ¾" Poly Pinch Valve | EPDM | 300 | 1"x ¾" | 15 to 20 PSI | 1 |
| PV100-075V | 1" x ¾" Poly Pinch Valve | FKM | 300 | 1"x ¾" | 15 to 20 PSI | 1 |
| PV100-075B | 1" x ¾" Poly Pinch Valve Female Coupler | EPDM | 300 | 1"x ¾" | 15 to 20 PSI | 1 |
| PV100-075BV | 1" x ¾" Female Coupler Poly Pinch Valve | FKM | 300 | 1"x ¾" | 15 to 20 PSI | 1 |
| PV10265 | Bladder | EPDM | N/A | | | 1 |
| PV10265V | Bladder | FKM | N/A | | | 1 |

Attention: The polypropylene air actuated valve is normally an open valve, and has a maximum liquid pressure of 70 P.S.I.

The pressure differential (pressure it takes to close valve) of the valve is 15 to 20 P.S.I.

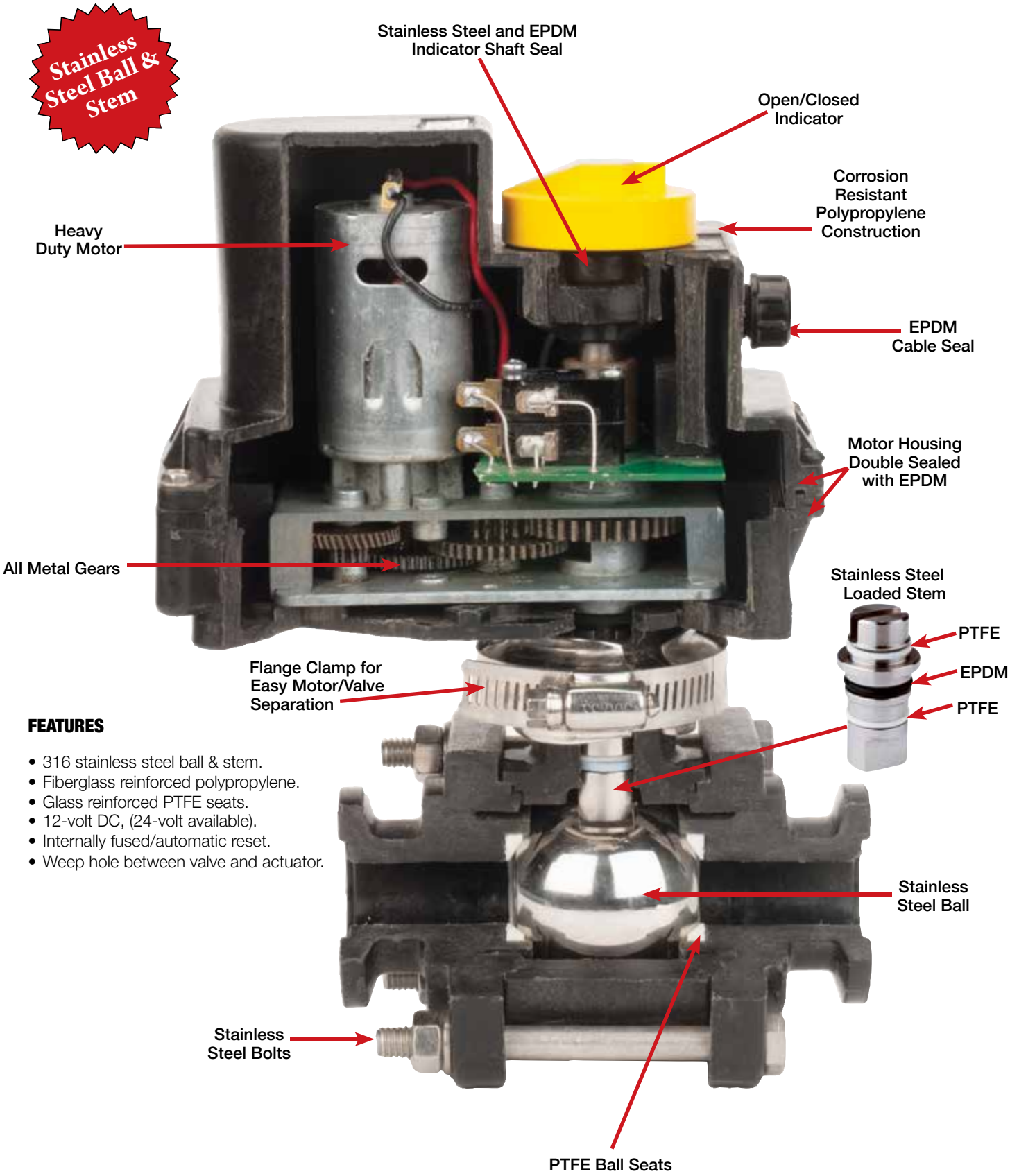


**FEATURES**

- 316 stainless steel ball & stem.
- Fiberglass reinforced polypropylene.
- Glass reinforced PTFE seats.
- 12-volt DC, (24-volt available).
- Internally fused/automatic reset.
- Weep hole between valve and actuator.

# LEV Series Electric Valves
## ¼", ⅜" & ½"

### FEATURES

- 12 Volt DC
- Stationary current draw: less than 0.04 amps.
- Rotating current draw: less than 0.40 amps.
- Stall current: 0.75 amps
- Response time: 1/3 sec open to close
- TFM seats
- EPDM seals
- Fiberglass reinforced polypropylene.
- Integrated mounting slot
- Standard 3 wire configuration.

John Guest Fitting

The brand "**John Guest**" is a registered trademark of John Guest International Limited.

### 1/3 Second Response Time

| ⅜"-½" ON/OFF ELECTRIC VALVES | | | | | |
|---|---|---|---|---|---|
| PART NO | DESCRIPTION | MAX PSI | PIPE SIZE | OPENING THRU BALL | QTY |
| LEV038 | ⅜" Full Port Electric Valve | 300 | ⅜" | ⅜" | 1 |
| LEV050 | ½" Electric Valve | 300 | ½" | 15/32" | 1 |

| LEV SERIES ELECTRIC PUSH LOCK VALVES | | | | | |
|---|---|---|---|---|---|
| PART NO | DESCRIPTION | MAX PSI | PIPE SIZE | OPENING THRU BALL | QTY |
| LEV025PL | ¼" Electric Valve Push Lock | 150 | ¼" | ⅜" | 1 |
| LEV038PL | ⅜" Full Port Electric Valve Push Lock | 150 | ⅜" | ⅜" | 1 |
| LEV050PL | ½" Electric Valve Push Lock | 150 | ½" | 15/32" | 1 |

| LEV SERIES ELECTRIC PUSH LOCK VALVES W/SPRAY TIP ADAPTER | | | | | |
|---|---|---|---|---|---|
| PART NO | DESCRIPTION | MAX PSI | PIPE SIZE | OPENING THRU BALL | QTY |
| LEV025PLST | ¼" Electric Valve with Spray Tip Adapter | 150 | ¼" | ⅜" | 1 |
| LEV038PLST | ⅜" Full Port Electric Valve with Spray Tip Adapter | 150 | ⅜" | ⅜" | 1 |

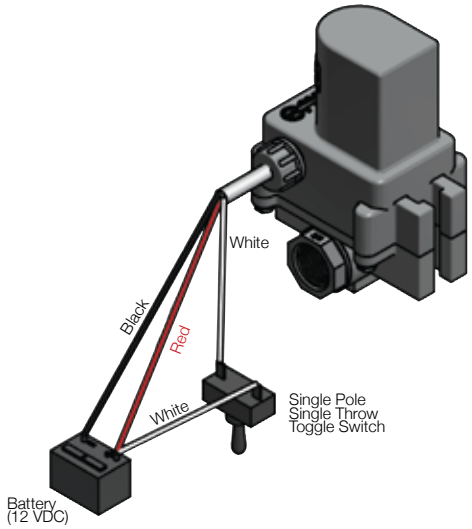

# Electric Valves
# ¾," 1," 1¼" Threaded





## FEATURES

- 316 stainless steel ball & stem.
- Stainless steel hardware.
- Fiberglass reinforced polypropylene.
- PTFE seats.
- FKM (viton type) or EPDM O-rings.
- 12-volt DC operated.
- 24-volt available in most models.
- Easily repairable.
- Open/closed indicator.

### ¾ Second Response Time

| ¾"-1¼" ON/OFF ELECTRIC VALVES | | | | | |
|---|---|---|---|---|---|
| PART NO | DESCRIPTION | MAX PSI | PIPE SIZE | OPENING THRU BALL | QTY |
| EV075 | ¾" Full Port Electric Valve | 300 | ¾" | 1" | 1 |
| EV100FP | 1" Full Port Electric Valve | 300 | 1" | 1" | 1 |
| EV125 | 1¼" Electric Valve | 300 | 1¼" | 1" | 1 |

### 4 Second Response Time

| ¾"-1¼" REGULATING ELECTRIC VALVES | | | | | |
|---|---|---|---|---|---|
| PART NO | DESCRIPTION | MAX PSI | PIPE SIZE | OPENING THRU BALL | QTY |
| EVR075 | ¾" Full Port Electric Valve | 300 | ¾" | 1" | 1 |
| EVR100FP | 1" Full Port Electric Valve | 300 | 1" | 1" | 1 |
| EVR125 | 1¼" Electric Valve | 300 | 1¼" | 1" | 1 |

**Note: 2 wire regulating and other response times available.**
**Contact our Sales Team for part number and availability of valves.**

ELECTRIC VALVE REPAIR KIT INCLUDES:
1 Gasket 1 Stem w/Seals 1 Ball Seals 1 Body O-Ring

Fast repair replacement options.

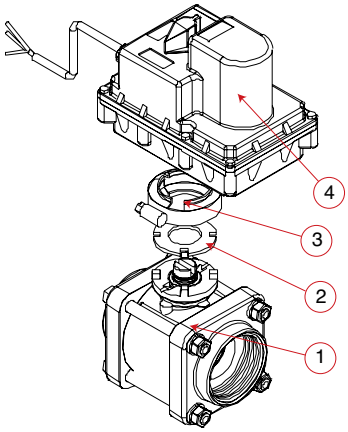


| REPLACEMENT PARTS EV075-EVR075-EV100FP-EVR100FP-EV125-EVR125 | | | |
|---|---|---|---|
| ITEM | PART NO | DESCRIPTION | QTY |
| 1 | EV075XR1 | ¾" Electric Valve Sub Assembly | 1 |
| 1 | EV100XR1 | 1" Electric Valve Sub Assembly | 1 |
| 1 | EV125XR1 | 1¼" Electric Valve Sub Assembly | 1 |
| 2 | MVE004 | Electric Valve Flange Gasket | 1 |
| 3 | FC100 | 1" Flange Clamp | 1 |
| 4 | EV3300 | ¾ Second 3 Wire Motor Assembly | 1 |
| 4 | EVR3300 | Regulating 4 Wire, 4 Second | 1 |
| KIT | EV10210 | Repair Kit | 1 |

On/Off
Wiring Diagram

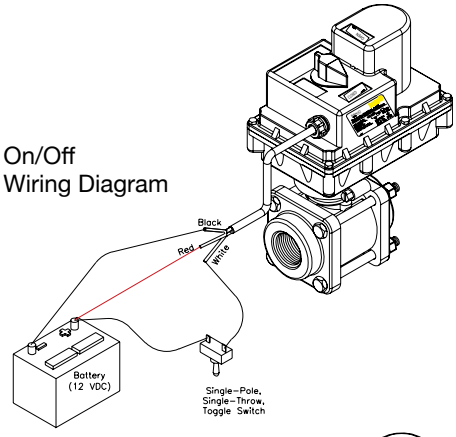


Regulating Wiring
Diagram

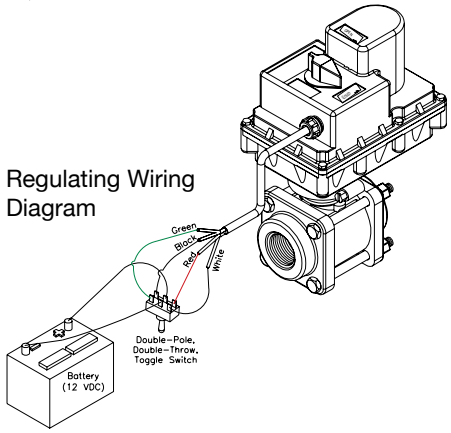

# Electric Valves
# 1½," 2" Threaded



## FEATURES

- 316 stainless steel ball & stem.
- Stainless steel hardware.
- Fiberglass reinforced polypropylene.
- PTFE seats.
- FKM (viton type) or EPDM O-rings.
- 12-volt DC operated.
- 24-volt available in most models.
- Easily repairable.
- Open/closed indicator.

### ON/OFF Electric Valves - 1¼ Second Response Time

| 1½"-2" ON/OFF ELECTRIC VALVES | | | | | |
|---|---|---|---|---|---|
| PART NO | DESCRIPTION | MAX PSI | PIPE SIZE | OPENING THRU BALL | QTY |
| EV150 | 1½" Electric Valve | 300 | 1½" | 1½" | 1 |
| EV200 | 2" Electric Valve | 300 | 2" | 1½" | 1 |

### REGULATING Electric Valves - 4 Second Response Time

| 2" REGULATING ELECTRIC VALVES | | | | | |
|---|---|---|---|---|---|
| PART NO | DESCRIPTION | MAX PSI | PIPE SIZE | OPENING THRU BALL | QTY |
| EVR150 | 1½" Electric Valve | 300 | 1½" | 1½" | 1 |

**Note: 2 wire regulating and other response times available.**
**Contact our Sales Team for part number and availability of valves.**

ELECTRIC VALVE REPAIR KIT INCLUDES:
1 Gasket 1 Stem w/Seals 1 Ball Seals 1 Body O-Ring

Fast repair replacement options.

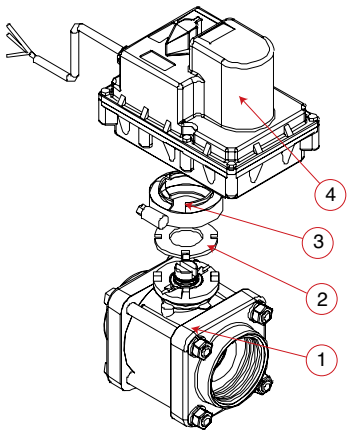


On/Off
Wiring Diagram

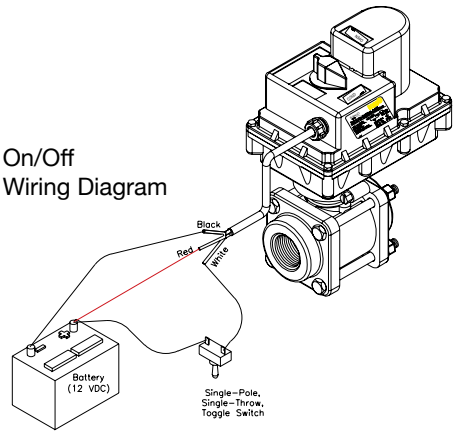


Regulating Wiring
Diagram

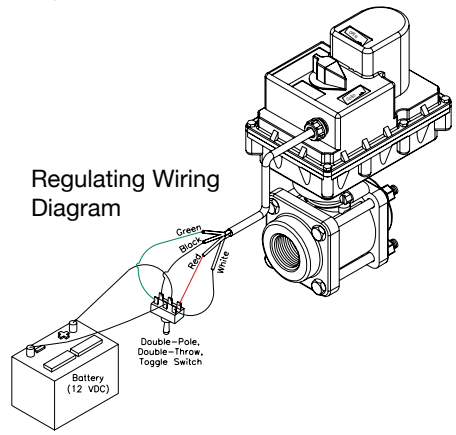


| REPLACEMENT PARTS EV150-EV200-EVR150-EVR200 | | | |
|---|---|---|---|
| ITEM | PART NO | DESCRIPTION | QTY |
| 1 | EV150XR1 | 1½" Full Port Electric Valve Sub Assembly | 1 |
| 1 | EV200XR1 | 2" Electric Valve Sub Assembly | 1 |
| 2 | MVE004 | Electric Valve Flange Gasket | 1 |
| 3 | FC100 | 1" Flange Clamp | 1 |
| 4 | EV4300 | 1¼ Second 3 Wire Motor Assembly | 1 |
| 4 | EVR4300 | Regulating 4 Wire, 4 Second | 1 |
| KIT | EV20210 | Repair Kit | 1 |

# Electric Valves
# 2" Full Port Threaded

## FEATURES

- 316 stainless steel ball & stem.
- Stainless steel hardware.
- Fiberglass reinforced polypropylene.
- PTFE seats.
- FKM (viton type) or EPDM O-rings.
- 12-volt DC operated.
- 24-volt available in most models.
- Easily repairable.
- Open/closed indicator.

### ON/OFF Electric Valves - 1¼ Second Response Time

| 2" FULL PORT ON/OFF ELECTRIC VALVES | | | | | |
|---|---|---|---|---|---|
| PART NO | DESCRIPTION | MAX PSI | PIPE SIZE | OPENING THRU BALL | QTY |
| EV204FP | 2" Full Port Electric Valve | 225 | 2" | 2" | 1 |

### REGULATING Electric Valves - 4 Second Response Time

| 2" FULL PORT REGULATING ELECTRIC VALVES | | | | | |
|---|---|---|---|---|---|
| PART NO | DESCRIPTION | MAX PSI | PIPE SIZE | OPENING THRU BALL | QTY |
| EVR204FP | 2" Full Port Electric Valve | 225 | 2" | 2" | 1 |

**Note: 2 wire regulating and other response times available.**
**Contact our Sales Team for part number and availability of valves.**

ELECTRIC VALVE REPAIR KIT INCLUDES:
1 Gasket 1 Stem w/Seals 1 Ball Seals 1 Body O-Ring

Fast repair replacement options.

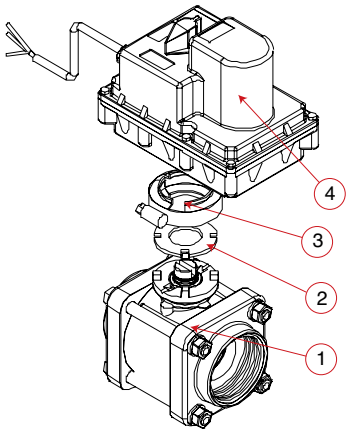


On/Off
Wiring Diagram

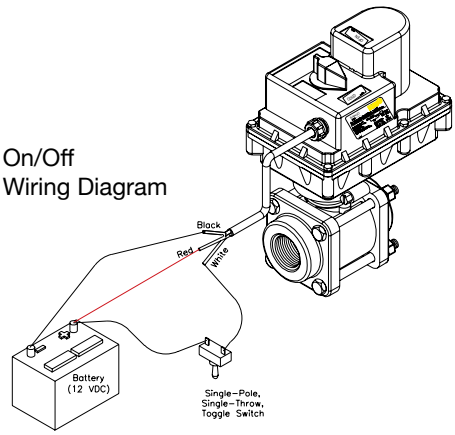


Regulating Wiring
Diagram

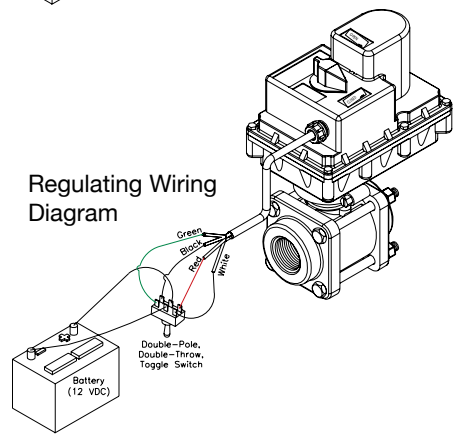


| REPLACEMENT PARTS EV204FP-EVR204FP | | | |
|---|---|---|---|
| ITEM | PART NO | DESCRIPTION | QTY |
| 1 | EV204XR1 | 2" Full Port Electric Valve Sub Assembly | 1 |
| 2 | MVE004 | Electric Valve Flange Gasket | 1 |
| 3 | FC100 | 1" Flange Clamp | 1 |
| 4 | EV4300 | 1¼ Second 3 Wire Motor Assembly | 1 |
| 4 | EVR4300 | Regulating 4 Wire, 4 Second | 1 |
| KIT | EV25210 | Repair Kit | 1 |

# Electric Valves
# 3" Full Port Threaded

## FEATURES

- Stainless steel hardware.
- Fiberglass reinforced polypropylene.
- PTFE seats.
- FKM (viton type) or EPDM O-rings.
- 12-volt DC operated (EV300FP)

### ON/OFF Electric Valves - 3 Second Response Time 3 Wire

| 3" FULL PORT ON/OFF ELECTRIC VALVES | | | | | |
|---|---|---|---|---|---|
| PART NO | DESCRIPTION | MAX PSI | PIPE SIZE | OPENING THRU BALL | QTY |
| EV300FP | 3" Full Port Electric Valve | 200 | 3" | 3" | 1 |

### ON/OFF Electric Valves - 9 Second Response Time 3 Wire

| 3" FULL PORT ON/OFF ELECTRIC VALVES | | | | | |
|---|---|---|---|---|---|
| PART NO | DESCRIPTION | MAX PSI | PIPE SIZE | OPENING THRU BALL | QTY |
| EV300FP110 | 3" Full Port Electric Valve with 110 volt AC | 200 | 3" | 3" | 1 |

**Note:4 wire regulating & 110 Volt AC, 9 Seconds response times available. Contact our sales team for part number and availability of valves.**

ELECTRIC VALVE REPAIR KIT INCLUDES:
1 Gasket 1 Stem w/Seals 1 Ball Seals 1 Body O-Ring

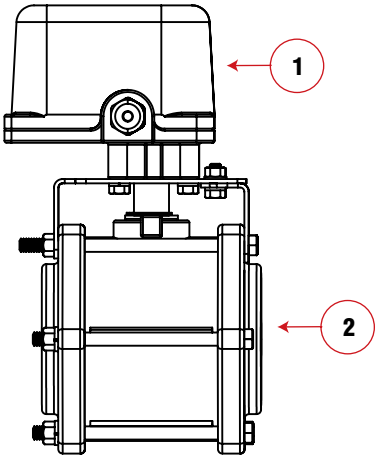


On/Off
Wiring Diagram

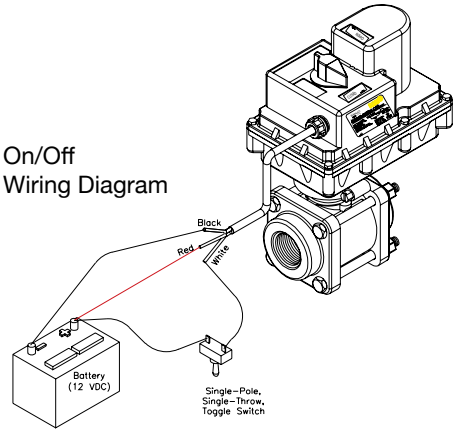


| REPLACEMENT PARTS EV300FP & EV300FP110 | | | |
|---|---|---|---|
| ITEM | PART NO | DESCRIPTION | QTY |
| 1 | VE5630 | 3 Sec, 12VDC Motor (EV300FP) | 1 |
| 1 | VE5793 | 9 Sec, 110 Volt AC Motor (EV300FP110) | 1 |
| 2 | EV300XR1A | 3" Electric Valve Only | 1 |
| KIT | EV35210 | Repair Kit | 1 |

# 3-Way Electric Valves
# ¾," 1," 1¼" Threaded with Flanged Inlet

## FEATURES

- 316 stainless steel ball & stem.
- Stainless steel hardware.
- Fiberglass reinforced polypropylene.
- PTFE seats.
- FKM (viton type) or EPDM O-rings.
- 24-volt available in most models.
- 12-volt DC operated.
- Easily repairable.
- Open/closed indicator.

BOTTOM LOAD

### ¾ Second Response Time

| ¾"-1¼" BOTTOM LOAD ELECTRIC VALVES | | | | | |
|---|---|---|---|---|---|
| PART NO | DESCRIPTION | MAX PSI | PIPE SIZE | OPENING THRU BALL | QTY |
| EV075BL | ¾" Full Port Electric Valve | 300 | ¾" | 1" | 1 |
| EV100BL | 1" Electric Valve | 300 | 1" | 1" | 1 |

**BOTTOM LOAD: Directional flow right or left. Valve flow cannot be turned off.**

### ¾ Second Response Time

| ¾"-1¼" SIDE LOAD ELECTRIC VALVES | | | | | |
|---|---|---|---|---|---|
| PART NO | DESCRIPTION | MAX PSI | PIPE SIZE | OPENING THRU BALL | QTY |
| EV075SL | ¾" Full Port Electric Valve | 300 | ¾" | 1" | 1 |
| EV100SL | 1" Electric Valve | 300 | 1" | 1" | 1 |

**SIDE LOAD: Directional flow right or left. Valve flow cannot be turned off.**

Attention:
3-Way regulating valves are not shown, but are available.
Standard 3-Way valves use the On/Off wiring diagram.

SIDE LOAD

Fast repair replacement options.

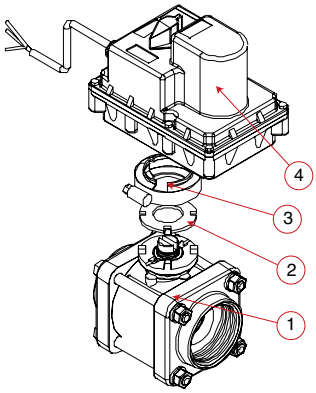


| REPLACEMENT PARTS EV075SL-EV075BL-EV100SL-EV100BL-EV125SL-EV125BL | | | |
|---|---|---|---|
| ITEM | PART NO | DESCRIPTION | QTY |
| 1 | EV075SLXR1 | ¾" Electric Valve Sub Assembly | 1 |
| 1 | EV100SLXR1 | 1" Electric Valve Sub Assembly | 1 |
| 1 | EV075BLXR1 | ¾" Electric Valve Sub Assembly | 1 |
| 1 | EV100BLXR1 | 1" Electric Valve Sub Assembly | 1 |
| 2 | MVE004 | Electric Valve Flange Gasket | 1 |
| 3 | FC100 | 1" Flange Clamp | 1 |
| 4 | EV3300 | ¾ Second 3 Wire Motor Assembly | 1 |
| KIT | EV10210 | Repair Kit | 1 |

On/Off
Wiring Diagram

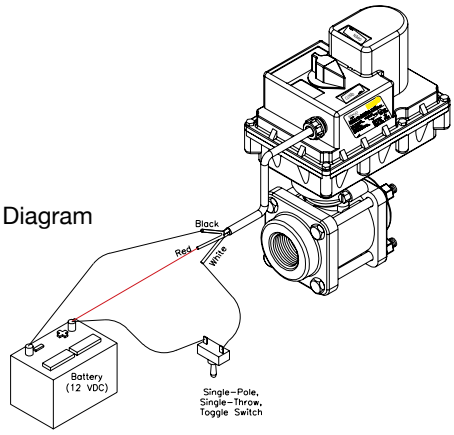

# 3-Way Electric Valves
# 1½", 2" Threaded w/Flanged Inlet

## FEATURES

- 316 stainless steel ball & stem.
- Stainless steel hardware.
- Fiberglass reinforced polypropylene.
- PTFE seats.
- FKM (viton type) or EPDM O-rings.
- 12-volt DC operated.
- 24-volt available in most models.
- Easily repairable.
- Open/closed indicator.

BOTTOM LOAD

**1¼ SECOND RESPONSE TIME**

| 1½"-2" BOTTOM LOAD ELECTRIC VALVES | | | | | |
|---|---|---|---|---|---|
| PART NO | DESCRIPTION | MAX PSI | PIPE SIZE | OPENING THRU BALL | QTY |
| EV150BL | 1½" Electric Valve | 225 | 1½" | 1½" | 1 |
| EV200BL | 2" Electric Valve | 225 | 2" | 1½" | 1 |

**BOTTOM LOAD: Directional flow right or left. Valve flow cannot be turned off.**

**1¼ SECOND RESPONSE TIME**

| 1½"-2" SIDE LOAD ELECTRIC VALVES | | | | | |
|---|---|---|---|---|---|
| PART NO | DESCRIPTION | MAX PSI | PIPE SIZE | OPENING THRU BALL | QTY |
| EV150SL | 1½" Electric Valve | 300 | 1½" | 1½" | 1 |
| EV200SL | 2" Electric Valve | 300 | 2" | 1½" | 1 |

**SIDE LOAD: Directional flow right or left. Valve flow cannot be turned off.**

SIDE LOAD

Attention:
3-Way regulating valves are not shown, but are available.
Standard 3-Way valves use the On/Off wiring diagram.

Fast repair replacement options.

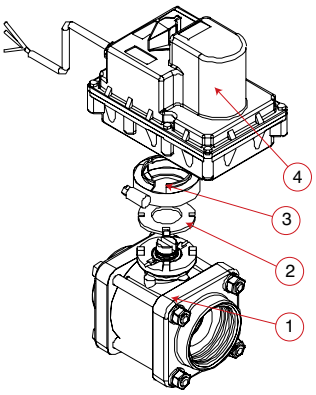


| REPLACEMENT PARTS EV150SL-EV150BL-EV200SL-EV200BL | | | |
|---|---|---|---|
| ITEM | PART NO | DESCRIPTION | QTY |
| 1 | EV150SLXR1 | 1½" Electric Valve Sub Assembly | 1 |
| 1 | EV200SLXR1 | 2" Electric Valve Sub Assembly | 1 |
| 1 | EV150BLXR1 | 1½" Electric Valve Sub Assembly | 1 |
| 1 | EV200BLXR1 | 2" Electric Valve Sub Assembly | 1 |
| 2 | MVE004 | Electric Valve Flange Gasket | 1 |
| 3 | FC100 | 1" Flange Clamp | 1 |
| 4 | EV4300 | 1¼ Second 3 Wire Motor Assembly | 1 |
| KIT | EV20210 | Repair Kit | 1 |

On/Off
Wiring Diagram

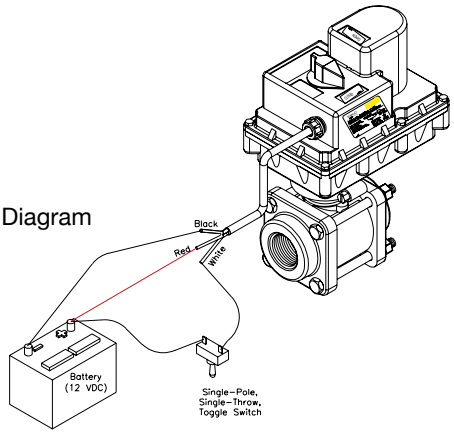

# 3-Way Electric Valves
# 2" Full Port Threaded w/Flanged Inlet

## FEATURES

- 316 stainless steel ball & stem.
- Stainless steel hardware.
- Fiberglass reinforced polypropylene.
- PTFE seats.
- FKM (viton type) or EPDM O-rings.
- 12-volt DC operated.
- 24-volt available in most models.
- Easily repairable.
- Open/closed indicator.

BOTTOM LOAD

**1¼ SECOND RESPONSE TIME**

| 2" FULL PORT BOTTOM LOAD ELECTRIC VALVES | | | | | |
|---|---|---|---|---|---|
| PART NO | DESCRIPTION | MAX PSI | PIPE SIZE | OPENING THRU BALL | QTY |
| EV204BLFP | 2" Full Port Electric Valve | 200 | 2" | 2" | 1 |

**BOTTOM LOAD: Directional flow right or left. Valve flow cannot be turned off.**

**1¼ SECOND RESPONSE TIME**

| 2" FULL PORT SIDE LOAD ELECTRIC VALVES | | | | | |
|---|---|---|---|---|---|
| PART NO | DESCRIPTION | MAX PSI | PIPE SIZE | OPENING THRU BALL | QTY |
| EV204SLFP | 2" Full Port Electric Valve | 150 | 2" | 2" | 1 |

**SIDE LOAD: Directional flow right or left. Valve flow cannot be turned off.**

SIDE LOAD

Attention:
3-Way regulating valves are not shown, but are available.
Standard 3-Way valves use the On/Off wiring diagram.

| ELECTRIC VALVE REPAIR KIT INCLUDES: | | | |
|---|---|---|---|
| 1 Gasket | 1 Stem w/Seals | 1 Ball Seals | 1 Body O-Ring |

Fast repair replacement options.

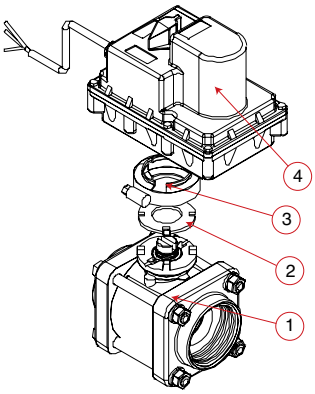


| REPLACEMENT PARTS EV204SLFP-EV204BLFP | | | |
|---|---|---|---|
| ITEM | PART NO | DESCRIPTION | QTY |
| 1 | EV204SLXR1 | 2" Full Port Electric Valve Sub Assembly | 1 |
| 1 | EV204BLXR1 | 2" Full Port Electric Valve Sub Assembly | 1 |
| 2 | MVE004 | Electric Valve Flange Gasket | 1 |
| 3 | FC100 | 1" Flange Clamp | 1 |
| 4 | EV4300 | 1¼ Second 3 Wire Motor Assembly | 1 |
| KIT | EV25210 | Repair Kit | 1 |

On/Off
Wiring Diagram

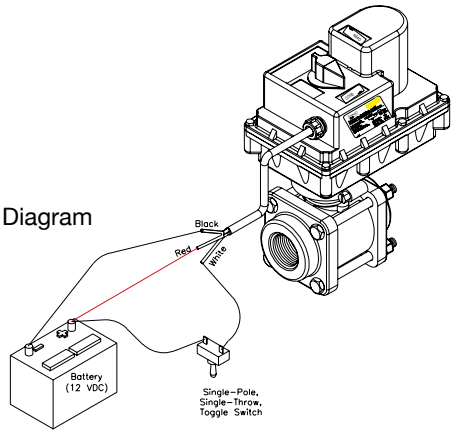

# 1" Banjo Electric Manifold Valve Assemblies



## 2 Valve Manifold

| 2 VALVE MANIFOLD ASSEMBLY (M200 SERIES) | | | | |
|---|---|---|---|---|
| PART NO | DESCRIPTION | MAX PSI | PIPE SIZE | QTY |
| MEV102CF | 1" Manifold Valve Assembly<br>2" Inlet Flanges, 1" Outlet Flanges | 300 | 2" In<br>1" Out | 1 |

## 3 Valve Manifold

| 3 VALVE MANIFOLD ASSEMBLY (M200 SERIES) | | | | |
|---|---|---|---|---|
| PART NO | DESCRIPTION | MAX PSI | PIPE SIZE | QTY |
| MEV103CF | 1" Manifold Valve Assembly<br>2" Inlet Flanges, 1" Outlet Flanges | 300 | 2" In<br>1" Out | 1 |

## 4 Valve Manifold

| 4 VALVE MANIFOLD ASSEMBLY (M200 SERIES) | | | | |
|---|---|---|---|---|
| PART NO | DESCRIPTION | MAX PSI | PIPE SIZE | QTY |
| MEV104CF | 1" Manifold Valve Assembly<br>2" Inlet Flanges, 1" Outlet Flanges | 300 | 2" In<br>1" Out | 1 |

## 5 Valve Manifold

| 5 VALVE MANIFOLD ASSEMBLY (M200 SERIES) | | | | |
|---|---|---|---|---|
| PART NO | DESCRIPTION | MAX PSI | PIPE SIZE | QTY |
| MEV105CF | 1" Manifold Valve Assembly<br>2" Inlet Flanges, 1" Outlet Flanges | 300 | 2" In<br>1" Out | 1 |

# ½" Electric Manifold Valves





## FEATURES

- 12 Volt DC
- Stationary current draw: less than 0.04 amps.
- Rotating current draw: less than 0.40 amps.
- Stall current: 0.75 amps
- Response time: 1/3 sec open to close
- TFM seats
- EPDM seals
- Fiberglass reinforced polypropylene.
- Integrated mounting slot
- Standard 3 wire configuration.

### 1/3 Second Response Time

| 1" ON/OFF ELECTRIC MANIFOLD VALVE | | | | | |
|---|---|---|---|---|---|
| PART NO | DESCRIPTION | MAX PSI | PIPE SIZE | OPENING THRU BALL | QTY |
| MLEV100 | 1" Manifold Electric Valve | 300 | 1" | ½" | 1 |

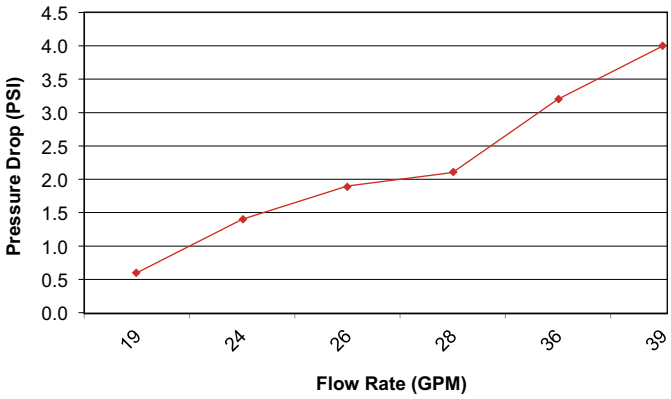


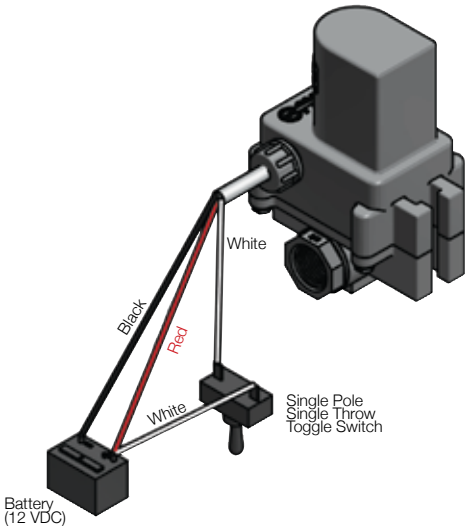

# 1"-2" Electric Manifold Valves



## FEATURES

- 1"-2" has 316 stainless steel ball & stem.
- Fiberglass reinforced polypropylene.
- PTFE seats.
- 12-volt DC operated.
- Internally fused/automatic reset.
- Open/closed indicator.

## ¾ to 1¼ SECOND RESPONSE TIME

| 1", 2" & 3" ON/OFF ELECTRIC MANIFOLD VALVES | | | | | |
|---|---|---|---|---|---|
| PART NO | DESCRIPTION | MAX PSI | PIPE SIZE | OPENING THRU BALL | QTY |
| MEV100CF | 1" Full Port Electric Valve | 300 | 1" | 1" | 1 |
| MEV200CF | 2" Standard Port Electric Valve | 300 | 2" | 1½" | 1 |
| MEV220CF | 2" Full Port Electric Valve | 225 | 2" | 2" | 1 |

## 4 SECOND RESPONSE TIME

| 1" & 2" REGULATING ELECTRIC MANIFOLD VALVES | | | | | |
|---|---|---|---|---|---|
| PART NO | DESCRIPTION | MAX PSI | PIPE SIZE | OPENING THRU BALL | QTY |
| MEVR100CF | 1" Full Port Electric Valve | 300 | 1" | 1" | 1 |
| MEVR200CF | 2" Standard Port Electric Valve | 300 | 2" | 1½" | 1 |
| MEVR220CF | 2" Full Port Electric Valve | 225 | 2" | 2" | 1 |

**Note: 2 wire regulating and other response times available. Contact our Sales Team for part number and availability of valves.**

Fast repair replacement options.

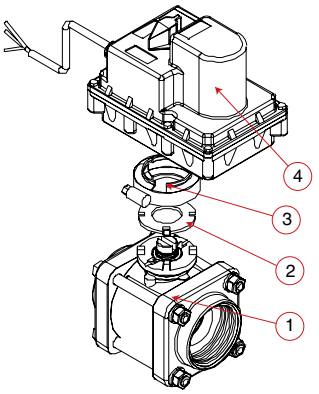


ELECTRIC VALVE REPAIR KIT INCLUDES:
1 Gasket 1 Stem w/Seals 1 Ball Seals 1 Body O-Ring

On/Off Wiring Diagram

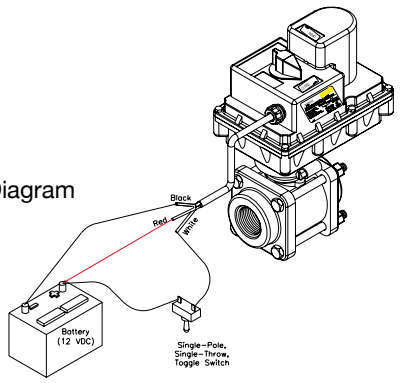


Regulating Wiring Diagram

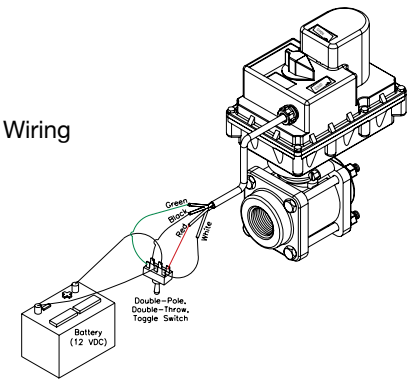


| REPLACEMENT PARTS MEV100CF-MEV200CF-MEV220CF-MEV300CF-MEVR100CF-MEVR200CF-MEVR220CF | | | |
|---|---|---|---|
| ITEM | PART NO | DESCRIPTION | QTY |
| 1 | MEV100XR1 | 1" Full Port Electric Valve Sub Assembly | 1 |
| 1 | MEV200XR1 | 2" Electric Valve Sub Assembly | 1 |
| 1 | MEV220XR1 | 2" Full Port Electric Valve Sub Assembly | 1 |
| 2 | MVE004 | Electric Valve Flange Gasket | 1 |
| 3 | FC100 | 1" Flange Clamp | 1 |
| 4 | EV3300 | 1" ¾ Second 3 Wire Motor Assembly | 1 |
| 4 | EV4300 | 2" 1¼ Second 3 Wire Motor Assembly | 1 |
| 4 | EVR3300 | Regulating 4 Wire, 4 Second for 1" | 1 |
| 4 | EVR4300 | Regulating 4 Wire, 4 Second for 2" | 1 |
| KIT | EV10210 | 1" Repair Kit | 1 |
| KIT | EV20210 | 2" Repair Kit | 1 |
| KIT | EV25210 | 2" FP Repair Kit | 1 |

# 3" Electric Manifold Valves





## FEATURES

- 3" has stainless steel ball and stem.
- Fiberglass reinforced polypropylene.
- PTFE seats.
- 12-volt DC operated.
- Internally fused/automatic reset.
- Open/closed indicator.

Don't forget the manifold connections on pages 43-47.

## 3 SECOND RESPONSE TIME

| 3" ON/OFF ELECTRIC MANIFOLD VALVES | | | | | |
|---|---|---|---|---|---|
| PART NO | DESCRIPTION | MAX PSI | PIPE SIZE | OPENING THRU BALL | QTY |
| MEV300CF | 3" Full Port Electric Valve | 200 | 3" | 3" | 1 |

Note: 2 wire regulating and other response times available. Contact our Sales Team for part number and availability of valves.

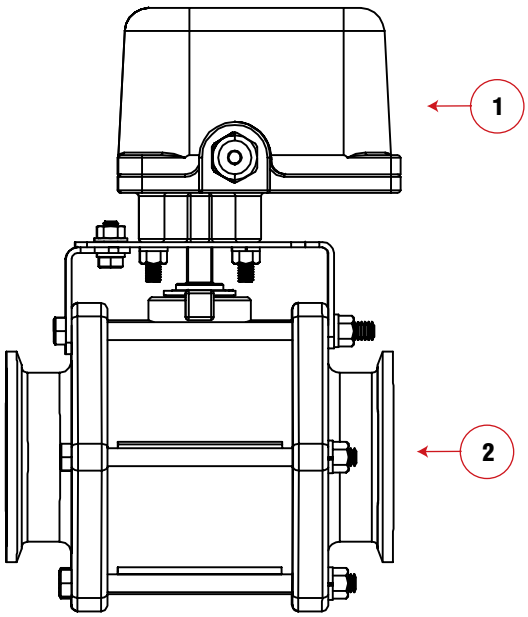


On/Off
Wiring Diagram

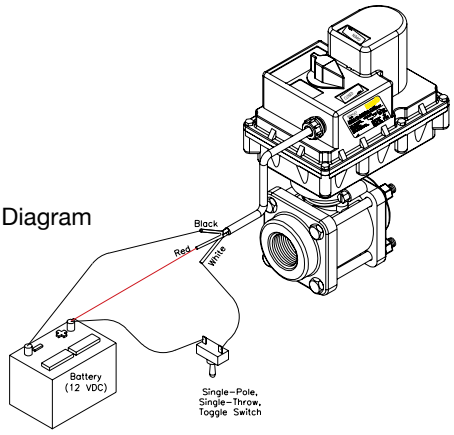


| REPLACEMENT PARTS MEV300FP | | | |
|---|---|---|---|
| ITEM | PART NO | DESCRIPTION | QTY |
| 1 | VE5630 | 3 Sec, 12VDC Motor | 1 |
| 2 | MEV300XR1A | 3" Manifold Electric Valve Only | 1 |
| KIT | EV35210 | Repair Kit | 1 |

# 3-Way Side Load Electric Manifold Valves
# 1", 1½", & 2" Full Port



## FEATURES

- 316 stainless steel ball & stem.
- Fiberglass reinforced polypropylene.
- PTFE seats.
- 12-volt DC operated.
- Internally fused/automatic reset.
- Open/closed indicator.

### ¾ to 1¼ RESPONSE TIME

| 1" & 2" SIDE LOAD ELECTRIC MANIFOLD VALVES | | | | | |
|---|---|---|---|---|---|
| PART NO | DESCRIPTION | MAX PSI | PIPE SIZE | OPENING THRU BALL | QTY |
| MEV100SLCF | 1" Full Port Electric Valve | 300 | 1" | 1" | 1 |
| MEV200SLCF | 2" Standard Port Electric Valve | 300 | 2" | 1½" | 1 |
| MEV220SLCF | 2" Full Port Electric Valve | 150 | 2" | 2" | 1 |

### 4 SECOND RESPONSE TIME

| 1" & 2" REGULATING SIDE LOAD ELECTRIC MANIFOLD VALVES | | | | | |
|---|---|---|---|---|---|
| PART NO | DESCRIPTION | MAX PSI | PIPE SIZE | OPENING THRU BALL | QTY |
| MEVR100SLCF | 1" Full Port Electric Valve | 300 | 1" | 1" | 1 |
| MEVR200SLCF | 2" Standard Port Electric Valve | 300 | 2" | 1½" | 1 |
| MEVR220SLCF | 2" Full Port Electric Valve | 150 | 2" | 2" | 1 |

ELECTRIC VALVE REPAIR KIT INCLUDES:
1 Gasket 1 Stem w/Seals 1 Ball Seals 1 Body O-Ring

**SIDE LOAD:**
**Directional flow left or right. Valve flow cannot be turned off.**

Fast repair replacement options.

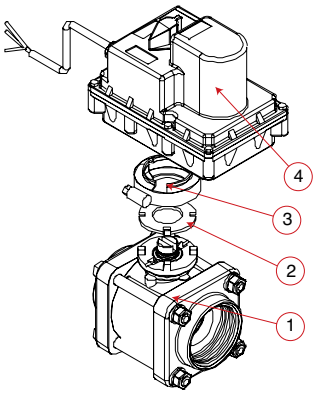


On/Off
Wiring Diagram

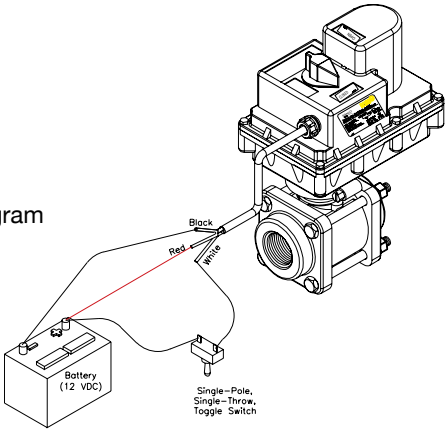


Regulating Wiring
Diagram

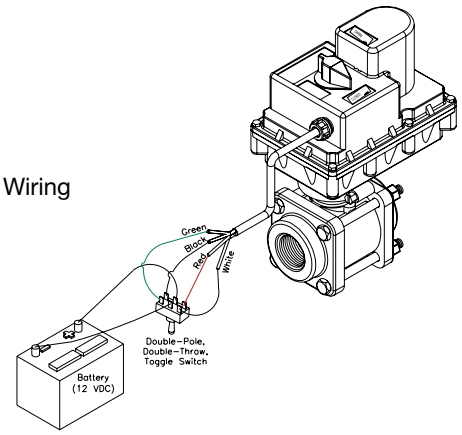


| REPLACEMENT PARTS MEV100SLCF-MEVR100SLCF-MEV200SLCF-MEVR200SLCF -MEV220SLCF-MEVR220SLCF | | | |
|---|---|---|---|
| ITEM | PART NO | DESCRIPTION | QTY |
| 1 | MEV100SLXR1 | 1" Full Port Electric Valve Sub Assembly | 1 |
| 1 | MEV200SLXR1 | 2" Electric Valve Sub Assembly | 1 |
| 1 | MEV220SLXR1 | 2" Full Port Electric Valve Sub Assembly | 1 |
| 2 | MVE004 | Electric Valve Flange Gasket | 1 |
| 3 | FC100 | 1" Flange Clamp | 1 |
| 4 | EV3300 | 1" ¾ Second 3 Wire Motor Assembly | 1 |
| 4 | EV4300 | 2" 1¼ Second 3 Wire Motor Assembly | 1 |
| 4 | EVR3300 | Regulating 4 Wire, 4 Second for 1" | 1 |
| 4 | EVR4300 | Regulating 4 Wire, 4 Second for 2" | 1 |
| KIT | EV10210 | 1" Repair Kit | 1 |
| KIT | EV20210 | 2" Repair Kit | 1 |
| KIT | EV25210 | 2" FP Repair Kit | 1 |

# 3-Way Bottom Load Electric Manifold Valves



## 1", 1½", & 2" Full Port

### FEATURES

- 316 stainless steel ball & stem.
- Fiberglass reinforced polypropylene.
- PTFE seats.
- 12-volt DC operated.
- Internally fused/automatic reset.
- Open/closed indicator.

Don't forget the manifold connections on pages 43-47.

### ¾ to 1¼ Response time

| 1" & 2" BOTTOM LOAD ELECTRIC MANIFOLD VALVES | | | | | |
|---|---|---|---|---|---|
| PART NO | DESCRIPTION | MAX PSI | PIPE SIZE | OPENING THRU BALL | QTY |
| MEV100BLCF | 1" Full Port Electric Valve | 300 | 1" | 1" | 1 |
| MEV200BLCF | 2" Standard Port ElectricValve | 300 | 2" | 1½" | 1 |
| MEV220BLCF | 2" Full Port Electric Valve | 150 | 2" | 2" | 1 |

**NOTE: NO Regulating Valve available for 3-way bottom load electric manifold valves.**

Fast repair replacement options.

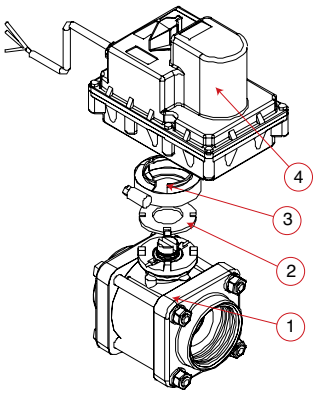


| REPLACEMENT PARTS MEV100BLCF-MEV200BLCF-MEV220BLCF | | | |
|---|---|---|---|
| ITEM | PART NO | DESCRIPTION | QTY |
| 1 | MEV100BLXR1 | 1" Full Port Electric Valve Sub Assembly | 1 |
| 1 | MEV200BLXR1 | 2" Electric Valve Sub Assembly | 1 |
| 1 | MEV220BLXR1 | 2" Full Port Electric Valve Sub Assembly | 1 |
| 2 | MVE004 | Electric Valve Flange Gasket | 1 |
| 3 | FC100 | 1" Flange Clamp | 1 |
| 4 | EV3300 | 1" ¾ Second 3 Wire Motor Assembly | 1 |
| 4 | EV4300 | 2" 1¼ Second 3 Wire Motor Assembly | 1 |
| KIT | EV10210 | 1" Repair Kit | 1 |
| KIT | EV20210 | 2" Repair Ki | 1 |
| KIT | EV25210 | 2" FP Repair Kit | 1 |

On/Off
Wiring Diagram

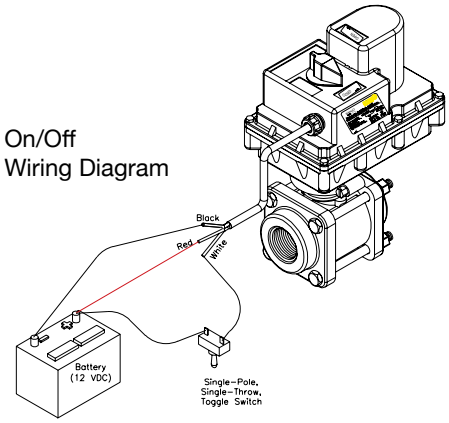

# Manifold Bolted Ball Valves
# 4 and 6 Bolt Valves



## FEATURES

- FKM (viton type) seals.
- PTFE self-lubricating stem bushings and seats cannot stick or bind.
- Precision molded in polypropylene. Polypropylene is reinforced with fiberglass for additional strength.
- Self-aligning ball moves freely against the PTFE seats for smooth operation. The valve opens and closes with very little pressure on the handle.
- Ball is diamond turned, after molding, to make it spherically perfect, which provides precise contact between ball and seats.

| MANIFOLD 4 & 6 BOLTED VALVES | | | | | | | |
|---|---|---|---|---|---|---|---|
| PART NO | DESCRIPTION | MAX PSI | PIPE SIZE | OPENING THRU BALL | QTY | HANDLE REPLACEMENT | REPAIR KIT |
| MV100CF | 1" Flange Ball Valve | 300 | 1" | 1" | 24/box | V10153A | V10200 |
| MV200CF | 2" Flange Ball Valve | 225 | 2" | 1½" | 12/box | V20153 | V20200 |
| MV220CF | 2" Full Port Flange Ball Valve | 300 | 2" | 2" | 8/box | V25153 | V25200 |
| MV300 | 3" Standard Flange Ball Valve | 150 | 3" | 2½" | 6/box | V25153 | V30200 |
| MV300CF | 3" Full Port Flange Ball Valve | 200 | 3" | 3" | 6/box | V25153 | V35200 |

VALVE REPAIR KIT INCLUDES:

| | | |
|---|---|---|
| 1 Ball | 2 Body O-Rings | 1 Thrust Washer |
| 2 Ball Seats | 1 Upper Stem Bushing | 1 Stem O-Ring |

**For *faster* shipping, order in box quantities.**

# Manifold Bolted 5 Way Ball Valve

banjosales@idexcorp.com

## FEATURES

- FKM (viton type) seals.
- PTFE self-lubricating stem bushings and seats cannot stick or bind.
- Precision molded in polypropylene. Polypropylene is reinforced with fiberglass for additional strength.
- Self-aligning ball moves freely against the PTFE seats for smooth operation. The valve opens and closes with very little pressure on the handle.
- Ball is diamond turned, after molding, to make it spherically perfect, which provides precise contact between ball and seats.

## FEATURES

- 12 Volt DC operated.
- 3 Second per quarter turn cycle time.
- FKM (viton type) seals.
- PTFE self-lubricating stem bushings and seats cannot stick or bind.
- Precision molded in polypropylene. Polypropylene is reinforced with fiberglass for additional strength.
- Self-aligning ball moves freely against the PTFE seats for smooth operation. The valve opens and closes with very little pressure on the handle.
- Stainless steel ball and stem.

MV225CF

MEV225CF

| MANIFOLD BOLTED 5 WAY VALVE | | | | | | |
|---|---|---|---|---|---|---|
| PART NO | DESCRIPTION | MAX PSI | PIPE SIZE | OPENING THRU BALL | QTY | REPAIR KIT |
| MV225CF | 2" Full Port Flange 5 Way Valve | 100 | 2" | 2" | 1 | MV225200 |
| MEV225CF | 2" Full Port Electric Flange 5 Way Valve | 300 | 2" | 2" | 1 | MV225200 |

# Manifold Valves
## 2" Standard Port Manifold Stubby Valve

**FEATURES**
- Stainless steel bolts.
- Glass reinforced polypropylene.
- Multiple design options.
- Unique patented compact design.
- Lightweight.

**For *faster* shipping, order in box quantities.**

VSMT200CF

VSF200CF

| 2" MANIFOLD STUBBY VALVES | | | | | | | |
|---|---|---|---|---|---|---|---|
| PART NO | DESCRIPTION | MAX PSI | PIPE SIZE | OPENING THRU BALL | QTY | HANDLE REPLACEMENT | REPAIR KIT |
| VSMT200CF | 2" Flange x 2" Male NPT | 150 | 2" | 1½" | 24/box | VS20152SH | VS20200 |
| VSF200CF | 2" Flange x 2" Male Adapter | 100 | 2" | 1½" | 24/box | VS20152SH | VS20200 |

# Manifold Valves
## 2" Full Port Manifold Stubby Valve

MVS220FP

MVS220CF

MVSF220FP

MVSMT220FP

| 2" FULL PORT MANIFOLD STUBBY VALVES | | | | | | | |
|---|---|---|---|---|---|---|---|
| PART NO | DESCRIPTION | MAX PSI | PIPE SIZE | OPENING THRU BALL | QTY | HANDLE REPLACEMENT | REPAIR KIT |
| MVS220FP | 2" FP Flange x 2" Female NPT | 300 | 2" | 2" | 8/box | VS25153 | VS25200 |
| MVSF220FP | 2" FP Flange x 2" Male Adapter | 150 | 2" | 2" | 8/box | VS25153 | VS25200 |
| MVS220CF | 2" FP Flange x 2" FP Flange | 150 | 2" | 2" | 8/box | VS25153 | VS25200 |
| MVSMT220FP | 2" FP Flange x 2" Male NPT | 225 | 2" | 2" | 8/box | VS25153 | VS25200 |

# Manifold Valves

## 2" Full Port Stainless Steel Manifold Stubby Valves

### FEATURES

- Stainless steel bolts.
- Glass reinforced polypropylene.
- Multiple design options.
- Unique patented compact design.
- Lightweight.

MVS220HSFP

MVSF220HSFP

MVSMT220HSFP

| 2" FULL PORT MANIFOLD STUBBY VALVES W/SS | | | | | | | |
|---|---|---|---|---|---|---|---|
| PART NO | DESCRIPTION | MAX PSI | PIPE SIZE | OPENING THRU BALL | QTY | HANDLE REPLACEMENT | REPAIR KIT |
| MVS220HSFP | 2" FP Flange x 2" FP Flange w/ SS Ball, Stem & Handle | 200 | 2" | 2" | 1 | VS25153SS | VSSH25200 |
| MVSF220HSFP | 2" FP Flange x 2" Male Adapter w/SS Ball, Stem & Handle | 150 | 2" | 2" | 1 | VS25153SS | VSSH25200 |
| MVSMT220HSFP | 2" FP NPT x 2" Male Flange w/SS Ball, Stem & Handle | 200 | 2" | 2" | 1 | VS25153SS | VSSH25200 |

### FEATURES

- 100% PTFE ball seats.
- Unique compact design.
- All PTFE seals. No elastomers.

MVSF220SS

| 2" FULL PORT MANIFOLD STAINLESS STEEL STUBBY VALVES | | | | | | | |
|---|---|---|---|---|---|---|---|
| PART NO | DESCRIPTION | MAX PSI | PIPE SIZE | OPENING THRU BALL | QTY | HANDLE REPLACEMENT | REPAIR KIT |
| MVS220SS | 2" FP Flange x 2" FP Flange Stainless Steel Stubby Valve | 300 | 2" | 2" | 1 | VSS20153 | VSSS25200 |
| MVSF220SS | 2" FP Flange x 2" Male Adapter Stainless Steel Stubby Valve | 300 | 2" | 2" | 1 | VSS20153 | VSSS25200 |
| MVSMT220SS | 2" FP Male NPT x 2" FP Flange Stainless Steel Stubby Valve | 225 | 2" | 2" | 1 | VSS20153 | VSSS25200 |

| 2" FULL PORT STAINLESS STEEL STUBBY VALVE | | | | | | | |
|---|---|---|---|---|---|---|---|
| PART NO | DESCRIPTION | MAX PSI | PIPE SIZE | OPENING THRU BALL | QTY | HANDLE REPLACEMENT | REPAIR KIT |
| VSFMT220SS | 2" FP Male Adapter x 2" NPT Stainless Steel Stubby Valve | 225 | 2" | 2" | 1 | VSS20153 | VSSS25200 |

# Manifold Valves
# 3" Manifold Stubby Valve



**FEATURES**
- Stainless steel bolts.
- Glass reinforced polypropylene.
- Multiple design options.
- Unique patented compact design.
- Lightweight.

MVSF300

MVSF300FP

MVSMT300

| 3" MANIFOLD STUBBY VALVES | | | | | | | |
|---|---|---|---|---|---|---|---|
| PART NO | DESCRIPTION | MAX PSI | PIPE SIZE | OPENING THRU BALL | QTY | HANDLE REPLACEMENT | REPAIR KIT |
| MVSF300 | 3" Flange x 3" Male Adapter | 100 | 3" | 2½" | 6/box | V25153 | VS30200 |
| MVSF300FP | 3" Full Port Flange x 3" Male Adapter | 100 | 3" | 3" | 6/box | V25153 | VS35200 |
| MVSMT300 | 3" Flange x 3" Male NPT | 225 | 3" | 2½" | 8/box | V25153 | VS30200 |

**For *faster* shipping, order in box quantities.**

MVS300CF

MVS300CFFP

| 3" MANIFOLD STUBBY VALVES | | | | | | | |
|---|---|---|---|---|---|---|---|
| PART NO | DESCRIPTION | MAX PSI | PIPE SIZE | OPENING THRU BALL | QTY | HANDLE REPLACEMENT | REPAIR KIT |
| MVS300CF | 3" Flange x 3" Flange | 200 | 3" | 2½" | 6/box | V25153 | VS30200 |
| MVS300CFFP | 3" Full Port Flange x 3" Full Port Flange | 150 | 3" | 3" | 6/box | V25153 | VS35200 |

# Manifold Valves

# 3" Full Port Stainless Steel Manifold Stubby Valve



**FEATURES**

- Stainless steel ball, stem, handle and bolts.
- Glass reinforced polypropylene.
- Multiple design options.
- Unique patented compact design.
- Lightweight.

MVS300HSFP

MVSF300HSFP

MVSMT300HSFP

| 3" FULL PORT MANIFOLD STUBBY VALVES W/SS | | | | | | | |
|---|---|---|---|---|---|---|---|
| PART NO | DESCRIPTION | MAX PSI | PIPE SIZE | OPENING THRU BALL | QTY | HANDLE REPLACEMENT | REPAIR KIT |
| MVS300HSFP | 3" FP Flange x 3" FP Flange w/SS Ball, Stem & Handle | 100 | 3" | 3" | 1/bx | VS30153SS | VSSH35200 |
| MVSF300HSFP | 3" FP Flange x 3" Male Adapter w/SS Ball, Stem & Handle | 100 | 3" | 3" | 1/bx | VS30153SS | VSSH35200 |
| MVSMT300HSFP | 3" FP Flange x 3" Male NPT w/SS Ball, Stem & Handle | 200 | 3" | 3" | 1/bx | VS30153SS | VSSH35200 |

# 3-Way Manifold Ball Valves



## FEATURES

- Stainless steel bolts.
- Precision molded in polypropylene. Polypropylene is reinforced with fiberglass for additional strength.
- Self-aligning ball moves freely against the PTFE seats for smooth operation.
- The valve opens and closes with very little pressure on the handle.
- Ball is diamond turned, after molding, to make it spherically perfect, which provides precise contact between ball and seats.
- PTFE self-lubricating stem bushings and seats cannot stick or bind.
- FKM (viton type) seals.

MV100BL

MV200BL

MV220BL

MV300BL

| BOLTED BOTTOM LOAD MANIFOLD VALVES | | | | | | | | |
|---|---|---|---|---|---|---|---|---|
| PART NO | DESCRIPTION | MAX PSI | FLANGE SIZE | OPENING THRU BALL | HANDLE TYPE | QTY | REPLACEMENT HANDLE | REPAIR KIT |
| MV100BL | 1" Manifold Flanged Valve | 300 | 1" | 1" | T | 18/box | V10353TB | MV10300SL |
| MV200BL | 2" Manifold Flanged Valve | 225 | 2" | 1½" | T | 12/box | V20353TB | MV10300SL |
| MV220BL | 2" Full Port Manifold Flanged Valve | 150 | 2" | 2" | Straight | 8/box | V25353TB (T)<br>V25353B (Straight) | V25200BL |
| MV300BL | 3" Full Port Manifold Flanged Valve | 150 | 3" | 3" | Straight | 4/box | V25353B | V35200BL |

**BOTTOM LOAD: Directional flow right or left. Valve can be turned off to stop flow.**

For *faster* shipping, order in box quantities.

# 3-Way Manifold Ball Valves



## FEATURES

- Stainless steel bolts.
- Precision molded in polypropylene. Polypropylene is reinforced with fiberglass for additional strength.
- Self-aligning ball moves freely against the PTFE seats for smooth operation.
- The valve opens and closes with very little pressure on the handle.
- Ball is diamond turned, after molding, to make it spherically perfect, which provides precise contact between ball and seats.
- PTFE self-lubricating stem bushings and seats cannot stick or bind.
- FKM (viton type) seals.

MV100SL

MV200SL

MV220SL

| 4 BOLT SIDE LOAD MANIFOLD VALVES | | | | | | | | |
|---|---|---|---|---|---|---|---|---|
| PART NO | DESCRIPTION | MAX PSI | FLANGE SIZE | OPENING THRU BALL | HANDLE TYPE | QTY | REPLACEMENT HANDLE | REPAIR KIT |
| MV100SL | 1" Manifold Flanged Valve | 300 | 1" | 1" | T | 18/box | V20353TS | MV10300SL |
| MV200SL | 2" Manifold Flanged Valve | 225 | 2" | 1½" | Straight | 10/box | V20153SH | MV10300SL |
| MV220SL | 2" Full Port Manifold Flanged Valve | 100 | 2" | 2" | Straight | 8/box | V25153SH | V25200BL |

**SIDE LOAD: Directional flow right or left. Valve cannot be turned off.**

# Manifold Pressure Spike Valves

## FEATURES

- Precision molded in polypropylene. Polypropylene is reinforced with fiberglass for additional strength.
- Preset pressure spring.
- Poppet is diamond turned, after molding, to make it spherically perfect, which provides precise seal.
- 360° Orientation.
- FKM (viton type) seals.

| MANIFOLD PRESSURE SPIKE VALVES | | | |
|---|---|---|---|
| PART NO | DESCRIPTION | PRESSURE SPIKE | QTY |
| MPRV100-100 | 1" Pressue Spike Valve | 300 | 1 |
| MPRV100-125 | 1" Pressue Spike Valve | 300 | 1 |

# Manifold Dry Disconnect

DRY MATE™ patented

*Patented Double Ball design with cam lever connection!*

## FEATURES

- Lightweight.
- Unrestricted flow.
- Minimal fluid spillage.
- Easy to use.
- Economical.
- Reduces risk of exposure.
- Wide range of chemical resistance.
- When properly installed and operated, the assembly will not accidentally separate while fluid is flowing; preventing costly mishaps.

3"

MALE 2" FEMALE

*Note: Male & female sold separately.*

| MANIFOLD DRY DISCONNECTS | | | | | | | |
|---|---|---|---|---|---|---|---|
| PART NO | DESCRIPTION | MAX PSI | FLANGE SIZE | OPENING THRU BALL | QTY | HANDLE REPLACEMENT | REPAIR KIT |
| DM200ACF | 2" Flanged Male Dry-Mate w/ FKM (viton type) Seals | 100 | 2" | 1½" | 1 | DM20153M | DM20200A |
| DM200DCF | 2" Flanged Female Dry-Mate w/FKM (viton type) Seals | 100 | 2" | 1½" | 1 | DM20153F | DM20200A |
| DM300ACF | 3" Flanged Male Dry-Mate w/ FKM(viton type) Seals | 150 | 3" | 3" | 1 | DM35153M | DM35200 |
| DM300DCF | 3" Flanged Female Dry-Mate w/ FKM(viton type) Seals | 150 | 3" | 3" | 1 | DM35153F | DM35200 |

# Polypropylene Inductors

## FEATURES

- Threaded or manifold ends.
- Glass reinforced polypropylene.
- 1½" & 2" sizes available.

MHV200
MHV220A

HV200

NOTE: The inductor is designed for use with a volume pump. Typical volumes and pressures used to operate the venturi would be in the 80 to 240 US GPM range at pressures from 26 to 52 P.S.I.

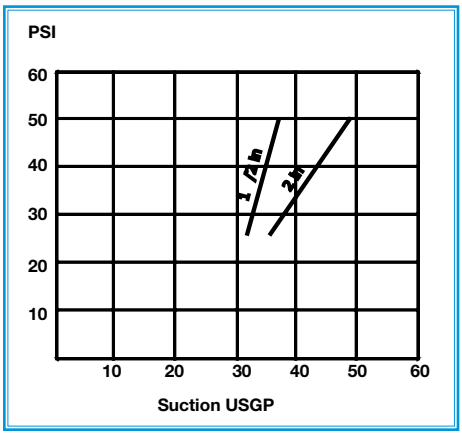


| POLY INDUCTORS | | | | | |
|---|---|---|---|---|---|
| PART NO | DESCRIPTION | PRESSURE AT PUMP | VOLUME DRAW* | OPENING SIZE | QTY |
| HV200 | 2" MPT Poly Inductor | 225 | 49 GPM | 7/16" | 1 |
| MHV200 | 2" Manifold Poly Inductor with 1½" Port | 300 | 37 GPM | 5/16" | 1 |
| MHV220A | 2" FP Manifold Poly Inductor | 225 | 49 GPM | 9/16" | 1 |

*Note: US GPM. Tests done with water at ambient temperature. Pump used for test was a 2" Banjo (5 vane impeller) driven by a 5.5 hp Honda gas motor. Performance may vary depending on pump used & product being pumped.

# Manifold Inductor System





**FEATURES**

- Installed after pump; suction completely empties inductor tank.
- Keeps tank free of chemicals.
- 2" & 3" full port flow.
- Easy assembly/installation with manifold connections.

*Note: Tank not included.

**Draws wettable powders or liquids from inductor tank for thorough chemical mixing!**

| MANIFOLD INDUCTOR SYSTEM | | | |
|---|---|---|---|
| PART NO | DESCRIPTION | PSI | QTY |
| MIS220 | 2" Full Port Flange x Flange-Assembled | 225 | 1 |
| MIS300 | 3" Flange x Flange-Assembled | 150 | 1 |

Flanged fittings, clamps & gaskets on page 47.

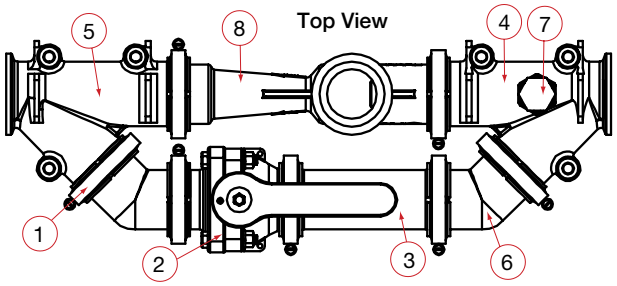


| REPLACEMENT PARTS MIS220 | | | |
|---|---|---|---|
| ITEM | PART NO | DESCRIPTION | QTY |
| 1 | FC220 | 220 Series Worm Screw Clamp | 10 |
| 2 | MVS220CF | 2" FP Flange x 2" FP Flange | 1 |
| 3 | M220CPG6 | 2" x 2" Full Port Flange x 6" | 1 |
| 4 | M220YG45 | 2" Full Port 45° Y Flange w/ ¾" gauge port* | 1 |
| 5 | M220Y45 | 2" Full Port 45° Y Flange | 1 |
| 6 | M220CPG45 | 2" Full Port 45° Coupling | 2 |
| 7 | PLUG075 | ¾" Pipe Plug | 1 |
| 8 | MHV220A | 2" Full Port Poly Venturi | 1 |
| N/S | M221G | 2" Full Port EPDM Manifold Gasket with **Rib** | 7 |

Note: *Gauge not included.

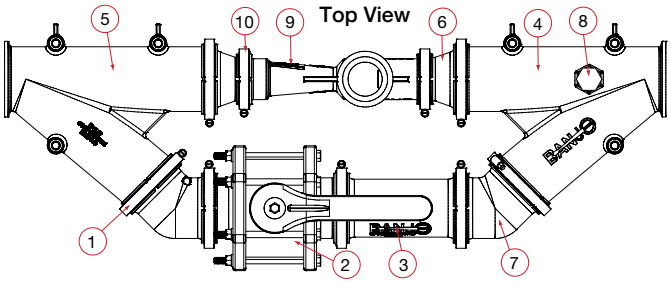


| REPLACEMENT PARTS MIS300 | | | |
|---|---|---|---|
| ITEM | PART NO | DESCRIPTION | QTY |
| 1 | FC300 | 300 Series Worm Screw Clamp | 7 |
| 2 | MV301CF | 3" FP Flange x 3" FP Flange | 1 |
| 3 | M300CPG7 | 3" x 3" Full Port Flange x 7" | 1 |
| 4 | M300YG45 | 3" Full Port 45° Y Flange w/ ¾" gauge port* | 1 |
| 5 | M300Y45 | 3" Full Port 45° Y Flange | 1 |
| 6 | M300220CPG | 3" x 2" Full Port Reducer Flange | 1 |
| 7 | M300CPG45 | 3" Full Port 45° Coupling | 2 |
| 8 | PLUG075 | ¾" Pipe Plug | 1 |
| 9 | MHV220A | 2" Full Port Poly Venturi | 1 |
| 10 | FC220 | 220 Series Worm Screw Clamp | 3 |
| N/S | M221G | 2" Full Port EPDM Manifold Gasket with **Rib** | 2 |
| N/S | M301G | 3" EPDM Manifold Gasket with **Rib** | 7 |

# Flow Meters



**FEATURES**

- Displays overall total volume & batch total volume!
- Flow rate allows for Gallons or Liters Per Minute.
- The display reads 6 digits for Rate, 8 digits for Total and 1 decimal place reading in tenths.
- Magnetic style meter with stainless steel electrodes.
- Self calibrating meter.
- Measures water and most conductive liquids*.
- Easy to change six (6) AA batteries.
- No moving parts to fail during use.
- Glass-reinforced polypropylene.
- Temperature range from 0°F to 150°F.
- Accuracy is 99% from 2 to 110 GPM for 1".
- Accuracy is 99% from 6 to 300 GPM for 2".
- Accuracy is 99% from 14 to 670 GPM for 3".
- There are 3 photoeyes located on the face of the flowmeter.
  Note: These are not push buttons, to activate you must hold your finger over the photoeye for 2-4 seconds.

**** Will not read petroleum based liquids.***

FM100

110 GPM!

MFM100

670 GPM!

MFM300

300 GPM!

MFM220

| FLOW METERS | | | |
|---|---|---|---|
| PART NO | DESCRIPTION | MAX PSI | QTY |
| FM100 | 1" Full Port Female NPT Flow Meter | 200 | 1 |
| MFM100 | 1" Full Port Manifold Flow Meter | 200 | 1 |
| MFM220 | 2" Full Port Manifold Flow Meter | 200 | 1 |
| MFM300 | 3" Full Port Manifold Flow Meter | 200 | 1 |

Note: It is recommended to have at least 10x the diameter of straight pipe before and after the flow meter.

Note: Please see Flange Clamps and Gaskets page 47

# Sweeps





## FEATURES

- Direct replacement for standard 90° flanged couplings.
- Positive seals.
- Quick & easy assembly.
- Easy On/Off hose connections.
- 360° Orientation.

*Improved Flow for Max GPM!*

M100125BRBSWP90

M100BRBSWP90

M100SWP90

M200SWP90

M220200SWP90

M220ASWP90

M220BRBSWP90

M220MPTSWP90

M220SWP90

M220SWP90SS

M300ASWP90

M300BRBSWP90

M300MPTSWP90

M300SWP90

M100125BRBSWPG90

M100BRBSWPG90

M100SWPG90

M300SWPG90

| SWEEPS | | | |
|---|---|---|---|
| PART NO | DESCRIPTION | MAX PSI | QTY |
| M100125BRBSWP90 | 1" Flange x 1¼" Hose Shank Sweep | 300 | 1 |
| M100BRBSWP90 | 1" Flange x Hose Shank Sweep | 300 | 1 |
| M100SWP90 | 1" Flange x Flange Sweep | 300 | 1 |
| M200SWP90 | 2" Flange x Flange Sweep | 300 | 1 |
| M220200SWP90 | 2" Full Port Flange x 2" Flange Sweep | 300 | 1 |
| M220ASWP90 | 2" Full Port Flange x Male Adapter Sweep | 200 | 1 |
| M220BRBSWP90 | 2" Full Port Flange x Hose Shank Sweep | 300 | 1 |
| M220MPTSWP90 | 2" Full Port Flange x Male NPT Thread Sweep | 300 | 1 |
| M220SWP90 | 2" Full Port Flange x Flange Sweep | 300 | 1 |
| M220SWP90SS | 2" Full Port SS Flange x Flange Sweep | 300 | 1 |
| M300ASWP90 | 3" Flange x Male Adapter Sweep | 100 | 1 |
| M300BRBSWP90 | 3" Flange x Hose Shank Sweep | 225 | 1 |
| M300MPTSWP90 | 3" Flange x Male NPT Thread Sweep | 200 | 1 |
| M300SWP90 | 3" Flange x Flange Sweep | 200 | 1 |

| SWEEPS w/Gauge Port | | | |
|---|---|---|---|
| PART NO | DESCRIPTION | MAX PSI | QTY |
| M100125BRBSWPG90 | 1" Full Port Flange x 1¼" Hose Shank Sweep w/ ¼" gauge port | 300 | 1 |
| M100BRBSWPG90 | 1" Full Port Flange x 1" Hose Shank Sweep w/¼" gauge port | 300 | 1 |
| M100SWPG90 | 1" Flange x Flange Sweep with ¼" gauge port | 300 | 1 |
| M300SWPG90 | 3" Flange x Flange Sweep w/ ¼" gauge port | 200 | 1 |

# Boom Nozzle Pipe Adapter



**FEATURES**

- Eliminates having to thread pipe.
- Quick and easy assembly.
- No welding necessary.
- 360° orientation.

| BOOM NOZZLE PIPE ADAPTER | | | |
|---|---|---|---|
| PART NO | DESCRIPTION | MAX PSI | QTY |
| M100PA | 1" Flanged Pipe Adapter | 300 | 1 |
| M100PAC | 1" Flanged Pipe Adapter Cap | 300 | 1 |
| M100PAT | 1" Flanged Pipe Adapter Tee | 300 | 1 |

# Manifold Fittings

**FEATURES**

- Positive seals.
- Quick & easy assembly.
- Easy On/Off hose connections.
- 360˚ Orientation.

| MANIFOLD SWIVEL | | | |
|---|---|---|---|
| PART NO | DESCRIPTION | MAX PSI | QTY |
| MSW220 | 2" Full Port Manifold Flange Swivel | 200 | 1 |

| FLANGE x PVC GLUE SOCKET FITTING | | | |
|---|---|---|---|
| PART NO | DESCRIPTION | MAX PSI | QTY |
| M101GSA | 1" Manifold Flange x 1" PVC Glue Socket Fitting | 300 | 1 |
| M221GSA | 2" Manifold Full Port Flange x 2" PVC Glue Socket Fitting | 300 | 1 |
| M301GSA | 3" Manifold Full Port Flange x 3" PVC Glue Socket Fitting | 300 | 1 |

| FLANGED POLY CHECK VALVES | | | | |
|---|---|---|---|---|
| PART NO | DESCRIPTION | MAX PSI | FLOW | QTY |
| MCV100 | 1" Flanged Poly Check Valve | 300 | 1" | 1 |
| MCV200 | 2" Flanged Poly Check Valve | 300 | 1½" | 1 |
| MCV221 | 2" Full Port Flanged Poly Check Valve | 200 | 2" | 1 |
| MCV300 | 3" Flanged Poly Check Valve | 200 | 3" | 1 |

| FLANGE x SOCKET WELD - 316SS | | | |
|---|---|---|---|
| PART NO | DESCRIPTION | MAX PSI | QTY |
| M100SWFSS | 1" Flange x 1" Socket Weld Fitting | 300 | 1 |
| M104SWFSS | 1" Flange x 1" Socket Weld Fitting x 4" | 300 | 1 |
| M200SWFSS | 2" Flange x 2" Socket Weld Fitting | 300 | 1 |
| M220SWFSS | 2" Full Port Flange x 2" Socket Weld Fitting | 300 | 1 |
| M220375SWFSS | 2" Full Port Flange x 2" Socket Weld Fitting x3¾" | 300 | 1 |
| M300SWFSS | 3" Flange x 3" Socket Weld Fitting | 300 | 1 |
| M300375SWFSS | 3" Flange x 3" Socket Weld Fitting x 3 ¾" | 300 | 1 |

## FLANGED COUPLINGS

| PART NO | DESCRIPTION | MAX PSI | QTY |
|---|---|---|---|
| M100CPG | 1" x 1" Flange x 2¼" Long | 300 | 10/bag |
| M200CPG | 2" x 2" Flange x 4½" Long | 300 | 10/bag |
| M220CPG | 2" x 2" Full Port Flange x 2 31/32" | 300 | 10/bag |
| M220CPG6 | 2" x 2" Full Port Flange x 6" Long | 300 | 1 |
| M300CPG | 3" x 3" Full Port Flange x 4" Long | 200 | 1 |
| M300CPG7 | 3" x 3" Full Port Flange x 7" Long | 225 | 1 |

## 45° FLANGED COUPLINGS

| PART NO | DESCRIPTION | MAX PSI | QTY |
|---|---|---|---|
| M100CPG45 | 1" x 1" 45° Flange | 300 | 10/bag |
| M200CPG45 | 2" x 2" 45° Flange | 300 | 10/bag |
| M220CPG45 | 2" x 2" 45° Full Port Flange | 225 | 10/bag |
| M300CPG45 | 3" x 3" 45° Full Port Flange | 225 | 1 |

## 90° FLANGED COUPLINGS

| PART NO | DESCRIPTION | MAX PSI | QTY |
|---|---|---|---|
| M100CPG90 | 1" x 1" 90° Flange | 300 | 10/bag |
| M200CPG90 | 2" x 2" 90° Flange | 300 | 1 |
| M200CPG90SH | 2" x 2" 90° Short Flange | 300 | 1 |
| M220CPG90 | 2" x 2" 90° Full Port Flange | 200 | 1 |
| M300CPG90 | 3" x 3" 90° Full Port Flange | 200 | 1 |

## 45° Y FLANGED COUPLINGS

| PART NO | DESCRIPTION | MAX PSI | QTY |
|---|---|---|---|
| M220Y45 | 2" Full Port 45° Y Flange | 300 | 1 |
| M200YG45 | 2" 45° Y Flange w/ ¾" gauge port* | 300 | 1 |
| M220YG45 | 2" Full Port 45° Y Flange w/ ¾" gauge port* | 225 | 1 |
| M300Y45 | 3" Full Port 45° Y Flange | 200 | 1 |
| M300YG45 | 3" Full Port 45° Y Flange w/ ¾" gauge port* | 200 | 1 |

Note: *Gauge not included.

**Must order in bag quantities for quick and easy shipping and receiving of your order.**

## FLANGED REDUCER COUPLINGS

| PART NO | DESCRIPTION | MAX PSI | QTY |
|---|---|---|---|
| M200100CPG | 2" Port x 1" Reducer Flange | 300 | 10/bag |
| M220100CPG | 2" Full Port x 1" Reducer Flange | 225 | 10/bag |
| M220200CPG | 2" Full Port x 2" Reducer Flange | 225 | 10/bag |
| M300200CPG | 3" x 2" Port Reducer Flange | 225 | 1 |
| M300220CPG | 3" x 2" Full Port Reducer Flange | 225 | 1 |

## FLANGED TEE

| PART NO | DESCRIPTION | MAX PSI | QTY |
|---|---|---|---|
| M100TEE | 1" Flanged Tee | 300 | 10/bag |
| M101TEE | 1" Flanged Tee - Long | 300 | 10/bag |
| M200100TEE | 2" Port x 1" Flanged Tee | 300 | 1 |
| M200TEE | 2" Port Flanged Tee | 300 | 1 |
| M220100TEE | 2" Full Port Flanged Tee x 1" Flanged Tee | 225 | 1 |
| M220200TEE | 2" Full Port Flanged Tee x 2" Flanged Tee | 300 | 1 |
| M220TEE | 2" Full Port Flanged Tee | 225 | 1 |
| M300TEE | 3" Flanged Tee | 225 | 1 |

## U BOLTS-SS

| PART NO | DESCRIPTION | MAX PSI | QTY |
|---|---|---|---|
| UB100 | 100 Series Mounting U Bolt | N/A | 1 |
| UB202 | 200 Series Mounting U Bolt | N/A | 1 |
| UB220 | 220 Series Mounting U Bolt | N/A | 1 |

## MANIFOLD BUTT WELD ADAPTER

| PART NO | DESCRIPTION | MAX PSI | QTY |
|---|---|---|---|
| M220BWASS | 2" Full Port Stainless Steel Manifold Butt Weld Adapter | 300 | 1 |

## BUTT WELD PIPE SWEEP

| PART NO | DESCRIPTION | MAX PSI | QTY |
|---|---|---|---|
| BW220SWP90SS | 2"90° Full Port Stainless Steel Butt Weld Pipe Sweep | 300 | 1 |

# Manifold Fittings



## FEATURES

- Positive seals.
- Quick & easy assembly.
- Easy On/Off hose connections.
- 360˚ Orientation.

**Must order in bag quantities for quick and easy shipping and receiving of your order.**

### FLANGE x MALE BSP(BRITISH STANDARD PIPE)

| PART NO | DESCRIPTION | MAX PSI | QTY |
|---|---|---|---|
| M100BSP | 1" Manifold Flange x 1" Male BSP | 300 | 10/bag |
| M200BSP | 2" Manifold Flange x 2" Male BSP | 300 | 10/bag |
| M220BSP | 2" Full Port Manifold Flange x 2" Male BSP | 300 | 10/bag |
| M300BSP | 3" Full Port Manifold Flange x 3" Male BSP | 300 | 1 |

### FLANGE x FEMALE NPT THREAD

| PART NO | DESCRIPTION | MAX PSI | QTY |
|---|---|---|---|
| M100050FPT | 1" Flange x ½" Pipe Thread | 300 | 10/bag |
| M100075FPT | 1" Flange x ¾" Pipe Thread | 300 | 10/bag |
| M100FPT | 1" Flange x 1" Pipe Thread | 300 | 10/bag |
| M200FPT | 2" Flange x 2" Pipe Thread | 300 | 10/bag |
| M220FPT | 2" Full Port Flange x 2" Pipe Thread | 300 | 10/bag |
| M300FPT | 3" Flange x 3" Pipe Thread | 200 | 1 |

### FLANGE x NPT THREAD

| PART NO | DESCRIPTION | MAX PSI | QTY |
|---|---|---|---|
| M100075MPT | 1" Flange x ¾" Male Thread | 300 | 10/bag |
| M100MPT | 1" Flange x 1" Male Thread | 300 | 10/bag |
| M100125MPT | 1" Flange x 1¼" Male Thread | 300 | 10/bag |
| M200125MPT | 2" Flange x 1¼" Male Thread | 300 | 10/bag |
| M200150MPT | 2" Flange x 1½" Male Thread | 300 | 10/bag |
| M200MPT | 2" Flange x 2" Male Thread | 300 | 10/bag |
| M220MPT | 2" Full Port Flange x 2" Male Thread | 300 | 10/bag |
| M300MPT | 3" Flange x 3" Male Thread | 300 | 1 |

### FLANGE x MALE NPT THREAD -316SS

| PART NO | DESCRIPTION | MAX PSI | QTY |
|---|---|---|---|
| M100MPTSS | 1" Flange x 1" Male Thread | 300 | 1 |
| M200125MPTSS | 2" Flange x 1¼" Male Thread | 300 | 1 |
| M200150MPTSS | 2" Flange x 1½" Male Thread | 300 | 1 |
| M200MPTSS | 2" Flange x 2" Male Thread | 300 | 1 |
| M220150MPTSS | 2" Full Port Flange x 1½" Male Thread | 300 | 1 |
| M220MPTSS | 2" Full Port Flange x 2" Male Thread | 300 | 1 |
| M300220MPTSS | 3" Flange x 2" Full Port Male Thread | 300 | 1 |
| M300MPTSS | 3" Flange x 3" Male Thread | 300 | 1 |

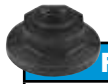

### FLANGE PLUGS (SOLID & W/GAUGE PORT)

| PART NO | DESCRIPTION | MAX PSI | QTY |
|---|---|---|---|
| M100PLG | 1" Flange Plug | 300 | 10/bag |
| M200PLG | 2" Flange Plug | 300 | 10/bag |
| M220PLG | 2" Full Port Flange Plug | 300 | 10/bag |
| M300PLG | 3" Flange Plug | 225 | 10/bag |
| M100PLG025 | 1" Flange Plug with ¼" FPT | 300 | 10/bag |
| M100PLG050 | 1" Flange Plug with ½" FPT | 300 | 10/bag |
| M200PLG025 | 2" Flange Plug with ¼" FPT | 225 | 10/bag |
| M200PLG038 | 2" Flange Plug with ⅜" FPT | 300 | 10/bag |
| M200PLG050 | 2" Flange Plug with ½" FPT | 225 | 10/bag |
| M200PLG075 | 2" Flange Plug with ¾" FPT | 225 | 10/bag |
| M200PLG100 | 2" Flange Plug with 1" FPT | 225 | 10/bag |
| M220PLG038 | 2" Full Port Flange Plug with ⅜" FPT | 150 | 10/bag |
| M220PLG075 | 2" Full Port Flange Plug with ¾" FPT | 225 | 10/bag |
| M300PLG075 | 3" Flange Plug with ¾" FPT | 200 | 10/bag |
| M300PLG100 | 3" Flange Plug with 1" FPT | 200 | 1 |

### FLANGE x FEMALE QDC

| PART NO | DESCRIPTION | MAX PSI | QTY |
|---|---|---|---|
| M220D | 2" Full Port Flange x 2" Female Coupler | 225 | 1 |
| M303D | 3" Full Port Flange x 3" Female Coupler w/3 Arms | 225 | 1 |

### FLANGE x MALE QDC

| PART NO | DESCRIPTION | MAX PSI | QTY |
|---|---|---|---|
| M100A | 1" Flange x 1" Male Adapter | 300 | 10/bag |
| M200A | 2" Flange x 2" Male Adapter | 300 | 10/bag |
| M220A | 2" Full Port Flange x 2" Male Adapter | 225 | 10/bag |
| M300A | 3" Full Port Flange x 3" Male Adapter | 100 | 1 |

### FLANGE x HOSE BARB

| PART NO | DESCRIPTION | MAX PSI | QTY |
|---|---|---|---|
| M100075BRB | 1" Flange x ¾" Hose Barb | 300 | 10/bag |
| M100BRB | 1" Flange x 1" Hose Barb | 300 | 10/bag |
| M100125BRB | 1" Flange x 1¼" Hose Barb | 300 | 10/bag |
| M200100BRB | 2" Flange x 1" Hose Barb | 300 | 10/bag |
| M200125BRB | 2" Flange x 1¼" Hose Barb | 300 | 10/bag |
| M200150BRB | 2" Flange x 1½" Hose Barb | 300 | 10/bag |
| M200BRB | 2" Flange x 2" Hose Barb | 300 | 10/bag |
| M220100BRB | 2" Full Port Flange x 1" Hose Barb | 300 | 10/bag |
| M220125BRB | 2" Full Port Flange x 1¼" Hose Barb | 300 | 10/bag |
| M220150BRB | 2" Full Port Flange x 1½" Hose Barb | 300 | 10/bag |
| M220250BRB | 2" Full Port Flange x 2½" Hose Barb | 225 | 1 |
| M220BRB | 2" Full Port Flange x 2" Hose Barb | 300 | 10/bag |
| M300220BRB | 3" Flange x 2" Hose Barb | 125 | 1 |
| M300BRB | 3" Flange x 3" Hose Barb | 200 | 1 |

## FLANGE x 90° HOSE BARB ELBOW

| PART NO | DESCRIPTION | MAX PSI | QTY |
|---|---|---|---|
| M100075BRB90 | 1" Flange x ¾" 90° Hose Barb Elbow | 300 | 10/bag |
| M100BRB90 | 1" Flange x 1" 90° Hose Barb Elbow | 300 | 10/bag |
| M100125BRB90 | 1" Flange x 1¼" 90° Hose Barb Elbow | 300 | 10/bag |
| M100150BRB90 | 1" Flange x 1½" 90° Hose Barb Elbow | 300 | 10/bag |
| M200100BRB90 | 2" Flange x 1" 90° Hose Barb Elbow | 300 | 10/bag |
| M200125BRB90 | 2" Flange x 1¼" 90° Hose Barb Elbow | 300 | 10/bag |
| M200150BRB90 | 2" Flange x 1½" 90° Hose Barb Elbow | 300 | 1 |
| M200BRB90 | 2" Flange x 2" 90° Hose Barb Elbow | 300 | 1 |
| M220150BRB90 | 2" Full Port Flange x 1½" 90° Hose Barb Elbow | 300 | 1 |
| M220BRB90 | 2" Full Port Flange x 2" 90° Hose Barb Elbow | 300 | 1 |
| M300220BRB90 | 3" Flange x 2" 90° Hose Barb Elbow | 300 | 1 |
| M300BRB90 | 3" Flange x 3" 90° Hose Barb Elbow | 150 | 1 |

## FLANGE x 45° HOSE BARB ELBOW

| PART NO | DESCRIPTION | MAX PSI | QTY |
|---|---|---|---|
| M100BRB45 | 1" Flange x 1" 45° Hose Barb Elbow | 300 | 10/bag |
| M200BRB45 | 2" Flange x 2" 45° Hose Barb Elbow | 300 | 1 |
| M220BRB45 | 2" Full Port Flange x 2" 45° Hose Barb Elbow | 300 | 10/bag |
| M300BRB45 | 3" Flange x 3" 45° Hose Barb Elbow | 150 | 1 |

## FLANGE x 45° HOSE BARB ELBOW

| PART NO | DESCRIPTION | MAX PSI | QTY |
|---|---|---|---|
| M200150BRB45 | 2" Flange x 1½" 45° Hose Barb Elbow | 300 | 10/bag |

## FLANGE x HOSE BARB TEE

| PART NO | DESCRIPTION | MAX PSI | QTY |
|---|---|---|---|
| M100100HBT | 1" Flange x 1" Hose Barb Tee | 300 | 10/bag |
| M100125HBT | 1" Flange x 1¼" Hose Barb Tee | 300 | 10/bag |
| M220200HBT | 2" Full Port Flange x 2" Hose Barb Tee | 300 | 1 |
| M300300HBT | 3" Flange x 3" Hose Barb Tee | 150 | 1 |

## FLANGED CROSS

| PART NO | DESCRIPTION | MAX PSI | QTY |
|---|---|---|---|
| M100CR | 1" Flanged Cross | 300 | 10/bag |
| M200CR | 2" Flanged Cross | 300 | 1 |
| M220CR | 2" Full Port Flanged Cross | 200 | 1 |
| M300CR | 3" Flanged Cross | 125 | 1 |

For Heavy duty use!

## BOLTED FLANGE CLAMPS

| PART NO | DESCRIPTION | TORQUE | QTY |
|---|---|---|---|
| FC220B | 2" Full Port Bolted Flange Clamp | 150 in/lbs | 1 |
| FC300B | 3" Bolted Flange Clamp | 150 in/lbs | 1 |

T-Bolt

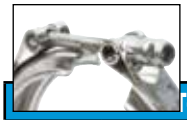

## T-BOLT FLANGE CLAMPS

| PART NO | DESCRIPTION | TORQUE | QTY |
|---|---|---|---|
| FC220TB | 2" Full Port Hi-Torque T-Bolt Flange Clamp | 125 in/lbs | 10/bag |
| FC300TB | 3" Full Port Hi-Torque T-Bolt Flange Clamp | 125 in/lbs | 10/bag |

## FLANGE CLAMPS

| PART NO | DESCRIPTION | TORQUE | QTY |
|---|---|---|---|
| FC100 | 100 Series Worm Screw Clamp | 50-60 in/lbs | 10/bag |
| FC200 | 200 Series Worm Screw Clamp | 90-100 in/lbs | 10/bag |
| FC220 | 220 Series Worm Screw Clamp | 90-100 in/lbs | 10/bag |
| FC300 | 300 Series Worm Screw Clamp | 90-100 in/lbs | 10/bag |

**Rib keeps gasket in place during assembly.**

## FLANGE GASKETS

| PART NO | DESCRIPTION | QTY |
|---|---|---|
| M100G | 100 Series EPDM Manifold Gasket | 1 |
| M101G | 100 Series EPDM Manifold Gasket with **Rib** | 1 |
| M100GV | 100 Series FKM (viton type) Gasket | 1 |
| 150G | 1½" EPDM Gasket | 1 |
| 150GV | 200 Series FKM (viton type) Gasket | 1 |
| 200G | 220 Series Full Port EPDM Gasket | 1 |
| 200GV | 220 Series Full Port FKM (viton type) Gasket | 1 |
| M201G | 200 Series EPDM Manifold Gasket with **Rib** | 1 |
| M221G | 220 Series Full Port EPDM Manifold Gasket with **Rib** | 1 |
| 300G | 300 Series EPDM Gasket | 1 |
| 300GV | 300 Series FKM (viton type) Gasket | 1 |
| M301G | 300 Series EPDM Manifold Gasket with **Rib** | 1 |

# Manifold T Line Strainers

See MINI versions on page 2!

**FEATURES**

- EPDM gaskets.
- 316 stainless steel screens.

| 1" MANIFOLD T LINE STRAINERS | | | |
|---|---|---|---|
| PART NO | DESCRIPTION | MAX PSI | QTY |
| MLST100-16 | 1" Manifold T Strainer w/16 Mesh Screen | 300 | 1 |
| MLST100-30 | 1" Manifold T Strainer w/30 Mesh Screen | 300 | 1 |
| MLST100-50 | 1" Manifold T Strainer w/50 Mesh Screen | 300 | 1 |
| MLST100-80 | 1" Manifold T Strainer w/80 Mesh Screen | 300 | 1 |
| MLST100-100 | 1" Manifold T Strainer w/100 Mesh Screen | 300 | 1 |

| 2" MANIFOLD T LINE STRAINERS | | | |
|---|---|---|---|
| PART NO | DESCRIPTION | MAX PSI | QTY |
| MLST150-16 | 2" Manifold T Strainer w/16 Mesh Screen | 225 | 1 |
| MLST150-30 | 2" Manifold T Strainer w/30 Mesh Screen | 225 | 1 |
| MLST150-50 | 2" Manifold T Strainer w/50 Mesh Screen | 225 | 1 |
| MLST150-80 | 2" Manifold T Strainer w/80 Mesh Screen | 225 | 1 |
| MLST150-100 | 2" Manifold T Strainer w/100 Mesh Screen | 225 | 1 |



# Manifold Y Line Strainers

**FEATURES**

- EPDM gaskets.
- 316 stainless steel screens.

| 1" MANIFOLD Y LINE STRAINERS | | | |
|---|---|---|---|
| PART NO | DESCRIPTION | MAX PSI | QTY |
| MLS100-20 | 1" Manifold Y Strainer w/20 Mesh Screen | 225 | 1 |
| MLS100-40 | 1" Manifold Y Strainer w/40 Mesh Screen | 225 | 1 |
| MLS100-50 | 1" Manifold Y Strainer w/50 Mesh Screen | 225 | 1 |
| MLS100-80 | 1" Manifold Y Strainer w/80 Mesh Screen | 225 | 1 |

**FEATURES**

- EPDM gaskets.
- 316 stainless steel screens.

| 2" MANIFOLD Y LINE STRAINERS | | | |
|---|---|---|---|
| PART NO | DESCRIPTION | MAX PSI | QTY |
| MLS200-06 | 2" Manifold Y Strainer w/6 Mesh Screen | 225 | 1 |
| MLS200-12 | 2" Manifold Y Strainer w/12 Mesh Screen | 225 | 1 |
| MLS200-20 | 2" Manifold Y Strainer w/20 Mesh Screen | 225 | 1 |
| MLS200-30 | 2" Manifold Y Strainer w/30 Mesh Screen | 225 | 1 |
| MLS200-50 | 2" Manifold Y Strainer w/50 Mesh Screen | 225 | 1 |
| MLS200-50M | 2" Manifold Y Strainer w/Mounting Bracket w/50 Mesh Screen | 225 | 1 |
| MLS200-80 | 2" Manifold Y Strainer w/80 Mesh Screen | 225 | 1 |
| MLS200-100 | 2" Manifold Y Strainer w/100 Mesh Screen | 225 | 1 |
| MLS200-120 | 2" Manifold Y Strainer w/120 Mesh Screen | 225 | 1 |

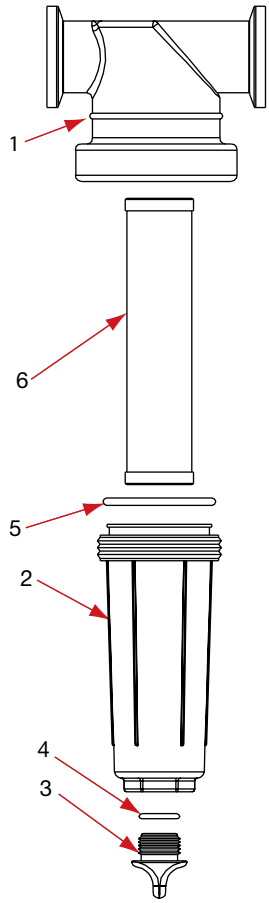


| SCREENS | |
|---|---|
| MESH SIZE | RIB COLOR |
| 16 MESH | BROWN RED |
| 30 MESH | FLAME RED |
| 50 MESH | GENETIAN BLUE |
| 80 MESH | ZINC YELLOW |
| 100 MESH | TRAFFIC GREEN |

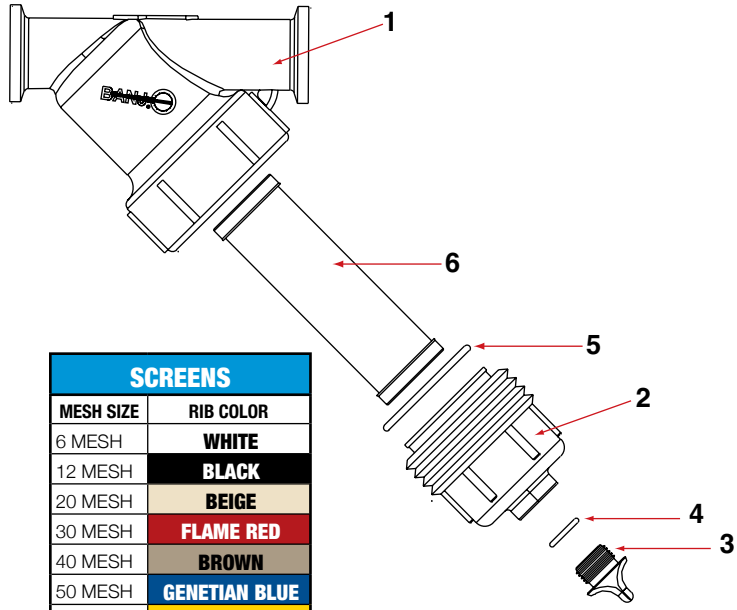


| SCREENS | |
|---|---|
| MESH SIZE | RIB COLOR |
| 6 MESH | WHITE |
| 12 MESH | BLACK |
| 20 MESH | BEIGE |
| 30 MESH | FLAME RED |
| 40 MESH | BROWN |
| 50 MESH | GENETIAN BLUE |
| 80 MESH | ZINC YELLOW |
| 100 MESH | TRAFFIC GREEN |
| 120 MESH | BLACK |

## REPLACEMENT PARTS MLST100

| ITEM | PART NO | DESCRIPTION | QTY |
|---|---|---|---|
| 1 | MLST100-H | 1" Flanged T Strainer Body | 1 |
| 2 | LST100-B | 1" Flanged T Strainer Bowl, Drain Plug & O-Ring | 1 |
| 3 | 12777 | ½" Plug | 1 |
| 4 | UV15163 | 1" Flanged T Strainer O-Ring | 1 |
| 5 | LST100-G | 1" EPDM Gasket | 1 |
| 5 | LST100-GV | 1" FKM (viton type) Gasket | 1 |
| 6 | LST116 | 16 Mesh Screen | 1 |
| 6 | LST130 | 30 Mesh Screen | 1 |
| 6 | LST150 | 50 Mesh Screen | 1 |
| 6 | LST180 | 80 Mesh Screen | 1 |
| 6 | LST1100 | 100 Mesh Screen | 1 |
| KIT | MLST100-HB | 1" Flanged T Strainer (Includes 1-5) | 1 |

## REPLACEMENT PARTS MLS100

| ITEM | PART NO | DESCRIPTION | QTY |
|---|---|---|---|
| 1 | MLS100B | 1" Y Strainer Body | 1 |
| 2 | LS100-C1 | 1" Y Strainer Cap, Drain Plug & O-Ring | 1 |
| 3 | 12777 | ½" Plug | 1 |
| 4 | UV15163 | 1" Flanged Y Strainer O-Ring | 1 |
| 5 | LS100-G | 1" EPDM Gasket | 1 |
| 6 | LS120 | 20 Mesh Screen | 1 |
| 6 | LS140 | 40 Mesh Screen | 1 |
| 6 | LS150 | 50 Mesh Screen | 1 |
| 6 | LS180 | 80 Mesh Screen | 1 |
| KIT | MLS100BC | 1" Y Strainer Assembly (Includes items 1-5) | 1 |

## REPLACEMENT PARTS MLST150

| ITEM | PART NO | DESCRIPTION | QTY |
|---|---|---|---|
| 1 | MLST150-H | 1½" Flanged T Strainer Body | 1 |
| 2 | LST150-B | 1½" Flanged T Strainer Bowl, Drain Plug&O-Ring | 1 |
| 3 | LSQ200-PL | 1½" Flanged T Strainer Plug | 1 |
| 4 | LSQ200-R | 1½" Flanged T Strainer O-Ring | 1 |
| 5 | LST150-G | 1½" EPDM Gasket | 1 |
| 5 | LST150-GV | 1½" FKM (viton type) Gasket | 1 |
| 6 | LST1516 | 16 Mesh Screen | 1 |
| 6 | LST1530 | 30 Mesh Screen | 1 |
| 6 | LST1550 | 50 Mesh Screen | 1 |
| 6 | LST1580 | 80 Mesh Screen | 1 |
| 6 | LST15100 | 100 Mesh Screen | 1 |
| KIT | MLST150-HB | 1½" Flanged T Strainer (Includes 1-5) | 1 |

## REPLACEMENT PARTS MLS200

| ITEM | PART NO | DESCRIPTION | QTY |
|---|---|---|---|
| 1 | MLS200B | 2" Y Strainer Body | 1 |
| 2 | LS150-C | 2" Y Strainer Cap, Drain Plug & O-Ring | 1 |
| 3 | LSQ200-PL | 2" Flanged Y Strainer Plug | 1 |
| 4 | LSQ200-R | 2" Flanged Y Strainer O-Ring | 1 |
| 5 | LS150-G | 2" EPDM Gasket | 1 |
| 5 | LS150-GV | 2" FKM (viton type) Gasket | 1 |
| 6 | LS206 | 6 Mesh Screen | 1 |
| 6 | LS212 | 12 Mesh Screen | 1 |
| 6 | LS220 | 20 Mesh Screen | 1 |
| 6 | LS230 | 30 Mesh Screen | 1 |
| 6 | LS250 | 50 Mesh Screen | 1 |
| 6 | LS280 | 80 Mesh Screen | 1 |
| 6 | LS2100 | 100 Mesh Screen | 1 |
| 6 | LS2120 | 120 Mesh Screen | 1 |
| KIT | MLS200BC | 2" Y Strainer Assembly (Includes items 1-5) | 1 |

# Manifold Y Line Strainers



**FEATURES**

- EPDM gaskets.
- 316 stainless steel screens.

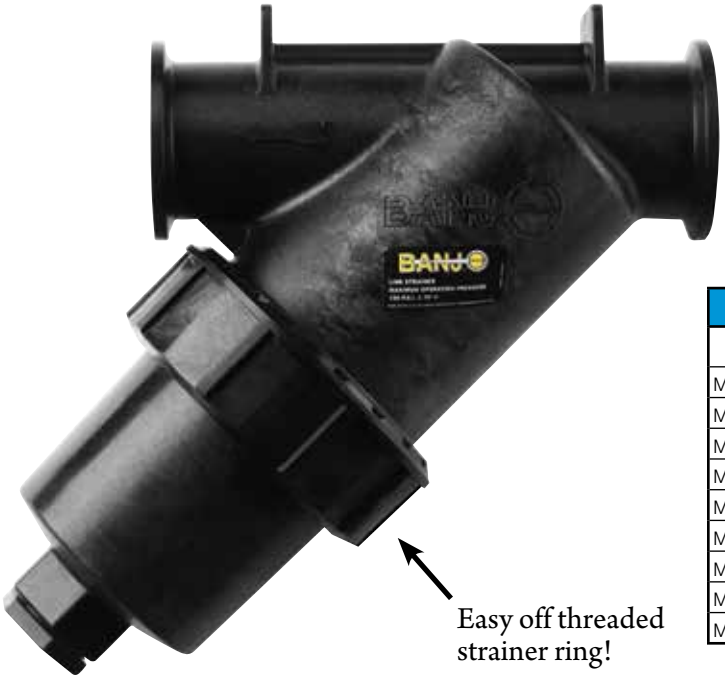


| 2" FULL PORT MANIFOLD Y LINE STRAINERS | | | |
|---|---|---|---|
| PART NO | DESCRIPTION | MAX PSI | QTY |
| MLS222-04 | 2" Full Port Manifold Y Strainer w/4 Mesh Screen | 225 | 1 |
| MLS222-06 | 2" Full Port Manifold Y Strainer w/6 Mesh Screen | 225 | 1 |
| MLS222-08 | 2" Full Port Manifold Y Strainer w/8 Mesh Screen | 225 | 1 |
| MLS222-10 | 2" Full Port Manifold Y Strainer w/10 Mesh Screen | 225 | 1 |
| MLS222-16 | 2" Full Port Manifold Y Strainer w/16 Mesh Screen | 225 | 1 |
| MLS222-30 | 2" Full Port Manifold Y Strainer w/30 Mesh Screen | 225 | 1 |
| MLS222-50 | 2" Full Port Manifold Y Strainer w/50 Mesh Screen | 225 | 1 |
| MLS222-80 | 2" Full Port Manifold Y Strainer w/80 Mesh Screen | 225 | 1 |
| MLS222-100 | 2" Full Port Manifold Y Strainer w/100 Mesh Screen | 225 | 1 |

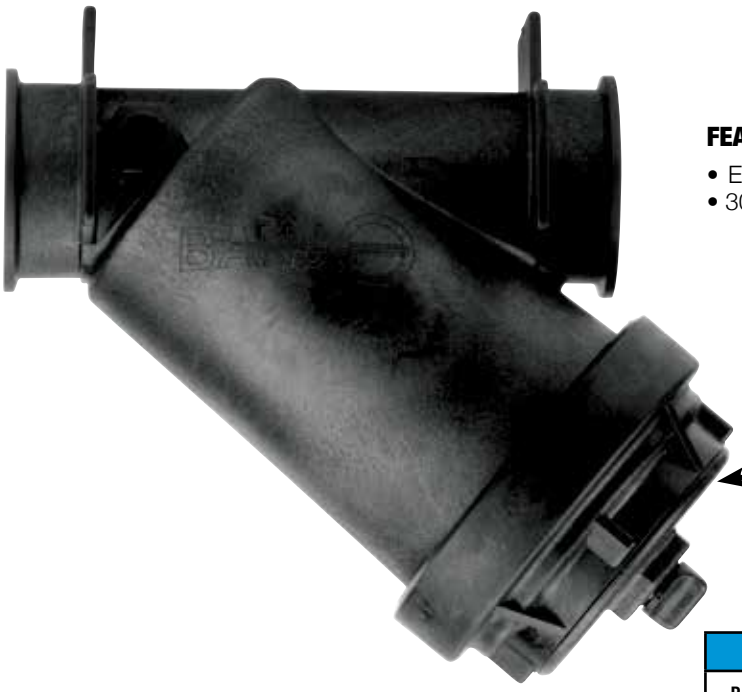


**FEATURES**

- EPDM gaskets.
- 304 stainless steel screens.

| 3" MANIFOLD Y LINE STRAINERS | | | |
|---|---|---|---|
| PART NO | DESCRIPTION | MAX PSI | QTY |
| MLS300-08 | 3" Manifold Y Strainer w/8 Mesh Screen | 100 | 1 |
| MLS300-12 | 3" Manifold Y Strainer w/12 Mesh Screen | 100 | 1 |
| MLS300-20 | 3" Manifold Y Strainer w/20 Mesh Screen | 100 | 1 |
| MLS300-50 | 3" ManifoldY Strainer w/50 Mesh Screen | 100 | 1 |

***WARNING**: 3" Polypropylene "Y" Strainer to be used on suction side or non-pressure side in all applications.

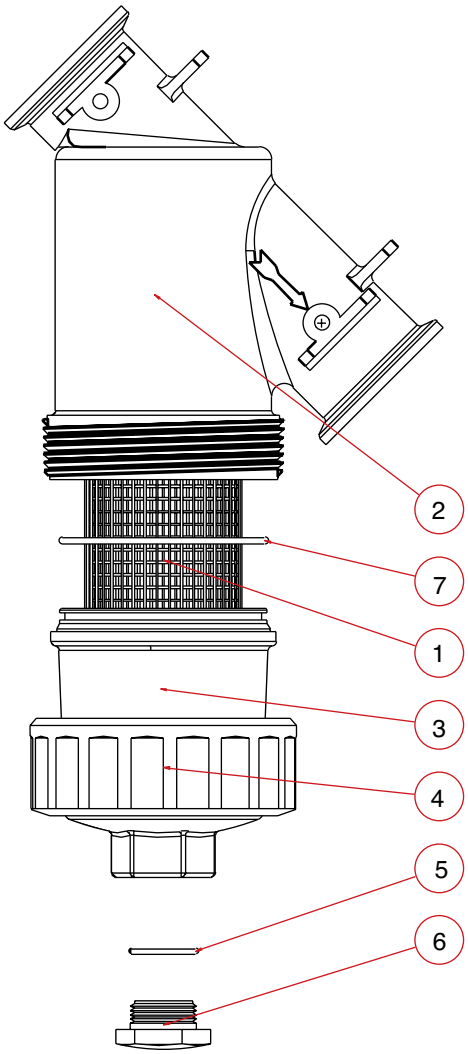


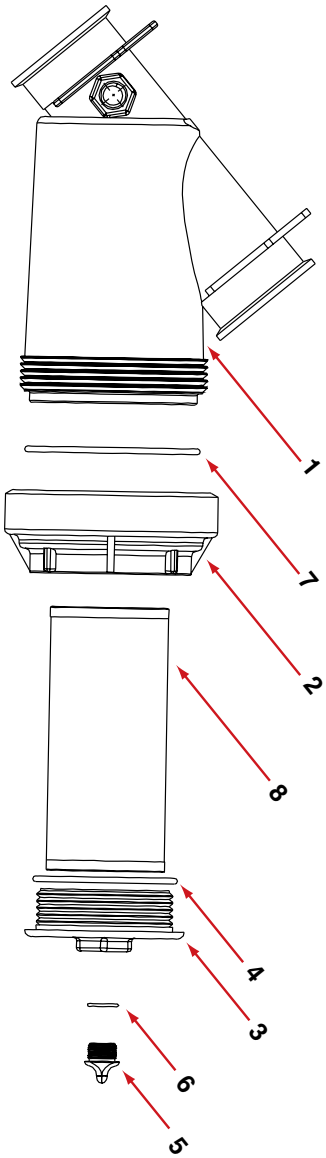


| REPLACEMENT PARTS MLS222 | | | |
|---|---|---|---|
| ITEM | PART NO | DESCRIPTION | QTY |
| 1 | LST204SS | 4 SS Mesh Screen | 1 |
| 1 | LST206SS | 6 SS Mesh Screen | 1 |
| 1 | LST208SS | 8 SS Mesh Screen | 1 |
| 1 | LST210SS | 10 SS Mesh Screen | 1 |
| 1 | LST216SS | 16 SS Mesh Screen | 1 |
| 1 | LST230SS | 30 SS Mesh Screen | 1 |
| 1 | LST250SS | 50 SS Mesh Screen | 1 |
| 1 | MLS250SS | 50 SS Mesh Perforated Screen | 1 |
| 1 | LST280SS | 80 SS Mesh Screen | 1 |
| 1 | MLS280SS | 80 SS Mesh Perforated Screen | 1 |
| 1 | LST2100SS | 100 SS Mesh Screen | 1 |
| 1 | MLS2100SS | 100 SS Mesh Perforated Screen | 1 |
| 2 | MLS222B | 2" Flanged Y Strainer Body | 1 |
| 3 | MLS220C1 | 2" Flanged Y Strainer Cap | 1 |
| 4 | MLS220R1 | 2" Flanged Y Strainer Ring | 1 |
| 5 | LSQ200-R | 2" Plug Gasket | 1 |
| 6 | LSQ200-PL | 2" Plug | 1 |
| 7 | MLS220G1 | 2" Body Gasket | 1 |
| 2-7 | MLS222BC | Strainer without Screen | 1 |

| REPLACEMENT PARTS MLS300 | | | |
|---|---|---|---|
| ITEM | PART NO | DESCRIPTION | QTY |
| 1 | MLS300B | 3" Flanged Y Strainer Body | 1 |
| 2 | MLS300CAP | 3" Flanged Y Strainer Cap | 1 |
| 3 | LS300EC | 3" End Cap | 1 |
| 4 | MLS300ECG | 3" EPDM End Cap Gasket | 1 |
| 4 | MLS300ECGV | 3" FKM (viton type) End Cap Gasket | 1 |
| 5 | 13777 | ¾" Plug | 1 |
| 6 | 13778 | O-Ring | 1 |
| 7 | MLS300G | 3" EPDM Cap Gasket | 1 |
| 7 | MLS300GV | 3" FKM (viton type) Cap Gasket | 1 |
| 8 | LS304 | 4 SS Mesh Screen | 1 |
| 8 | LS308 | 8 SS Mesh Screen | 1 |
| 8 | LS312 | 12 SS Mesh Screen | 1 |
| 8 | LS320 | 20 SS Mesh Screen | 1 |
| 8 | LS350 | 50 SS Mesh Screen | 1 |

# Manifold Bolted Tank Fittings "Bottom Drain"™

PATENTED

**FEATURES**

- Stainless steel bolts.
- Bolt head plugs sealed ultrasonically.
- Glass reinforced polypropylene.
- EPDM gaskets standard.
- FKM (viton type) available.

3"

Note: Tank not included.

| MANIFOLD BOLTED BOTTOM DRAIN TANK FLANGES | | | |
|---|---|---|---|
| PART NO | DESCRIPTION | PSI | QTY |
| MBF100BD | 1" Flange x 1" EPDM Female Thread | 150 | 27 |
| MBF100BDV | 1" Flange x 1" FKM(viton type) Female Thread | 150 | 27 |
| MBF150200BD | 2" Flange x 1½" EPDM Female Thread | 150 | 27 |
| MBF200BD | 2" Flange x 2" EPDM Female Thread | 150 | 25 |
| MBF220BD | 2" Full Port Flange x 2" EPDM Female Thread | 150 | 27 |
| MBF300BD | 3" Flange x 3" EPDM Female Thread | 150 | 16 |
| MBF300BDV | 3" Flange x 3" FKM(viton type) Female Thread | 150 | 16 |

# Manifold Bolted Tank Fittings

| MANIFOLD BOLTED TANK FLANGES | | | |
|---|---|---|---|
| PART NO | DESCRIPTION | PSI | QTY |
| MBF100 | 1" Flange x 1" EPDM Female Thread | 150 | 27 |
| MBF100V | 1" Flange x 1" FKM (viton type) Female Thread | 150 | 27 |
| MBF200 | 2" Flange x 2" EPDM Female Thread | 150 | 27 |
| MBF200V | 2" Flange x 2" FKM (viton type) Female Thread | 150 | 27 |
| MBF220 | 2" Full Port Flange x 2" EPDM Female Thread | 150 | 27 |
| MBF220V | 2" Full Port Flange x 2" FKM (viton type) Female Thread | 150 | 27 |
| MBF300 | 3" Flange x 3" EPDM Female Thread | 150 | 27 |
| MBF300V | 3" Flange x 3" FKM (viton type) Female Thread | 150 | 27 |

1"-2" 4-bolt

3" 6-bolt

# Manifold "Bottom Drain"™ & Bulkhead Tank Fittings

PATENTED

| MANIFOLD POLY BOTTOM DRAIN TANK FLANGES | | | | |
|---|---|---|---|---|
| PART NO | DESCRIPTION | HOLE SIZE | PSI | QTY |
| MTF220BD | 2" x 2" Full Port Manifold EPDM Flange | 3¼" | 300 | 1 |
| MTF300BD | 3" x 3" Manifold EPDM Flange | 4½" | 200 | 1 |

**Gasket and clamp not included. Please see page 47 for items.*

# Dry Poppet Couplings





## FEATURES

- Lightweight.
- Minimal fluid spillage.
- Easy to use.
- Economical.
- Reduces risk of exposure.
- Wide range of chemical resistance.
- Maximum operating temperature 150°F.
- 30 GPM maximum flow.
- Precision molded in polypropylene.
- 1" Female NPT threads.

## APPLICATIONS

- Agriculture
- Industrial
- Pharmaceutical
- Chemical processing

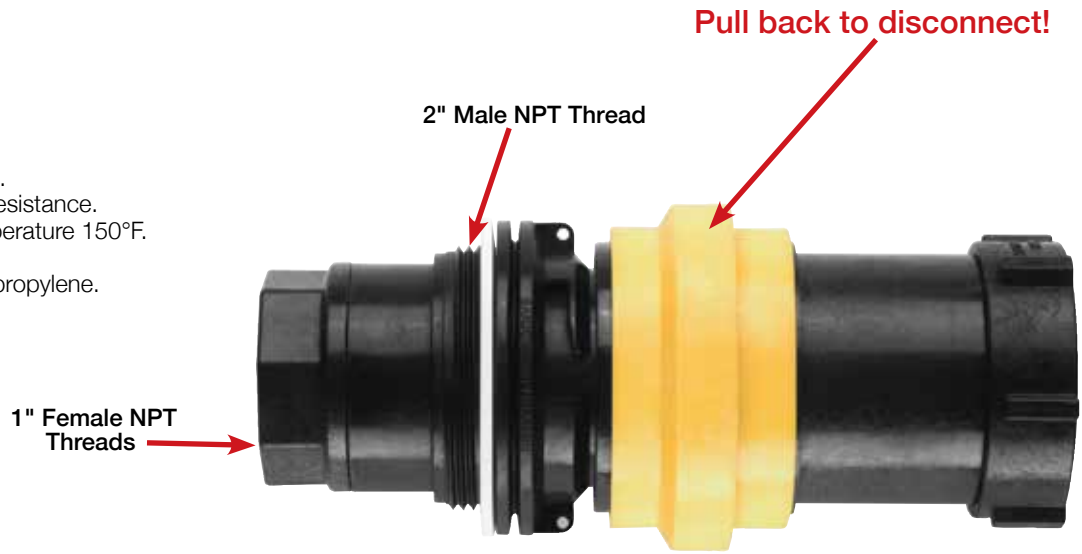


Male Adapter & Female Coupler shown coupled together but sold separately.

| DRY POPPET COUPLINGS | | | |
|---|---|---|---|
| PART NO | DESCRIPTION | MAX PSI | QTY |
| DPCF100 | Female Dry Poppet Coupler, 1" Female NPT Threads w/ FKM (viton type) Seals | 100 | 1 |
| DPCM100 | Male Dry Poppet Adapter, 1" Female NPT Threads w/ FKM (viton type) Seals | 150 | 1 |
| DPCMT100 | Male Dry Poppet Adapter, w/2" Male Threaded Body 1" Female NPT Threads w/ FKM (viton type) Seals | 150 | 1 |

**Male Adapter Dry Poppet** DPCM100

2" Male NPT Thread

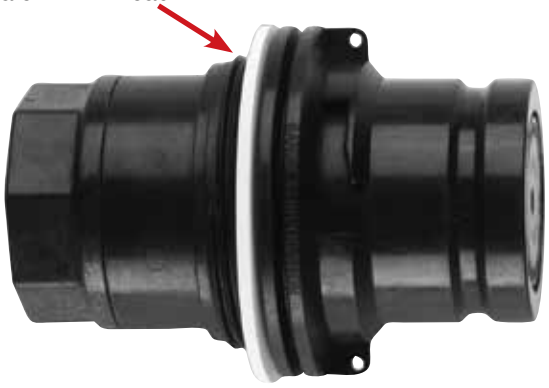

**Male Adapter Dry Poppet** DPCMT100

**Female Coupling Dry Poppet** DPCF100

# 1½" Polypropylene Dry-Disconnect

DRY MATE™ patented

## FEATURES

- Lightweight.
- Unrestricted 1½" flow.
- Minimal fluid spillage.
- Easy to use.
- Economical.
- Reduces risk of exposure.
- Wide range of chemical resistance.
- When properly installed and operated, the assembly will not accidentally separate while fluid is flowing; preventing costly mishaps.
- Spillage Data: 1½" = 2 ml and 2" = 2 ml

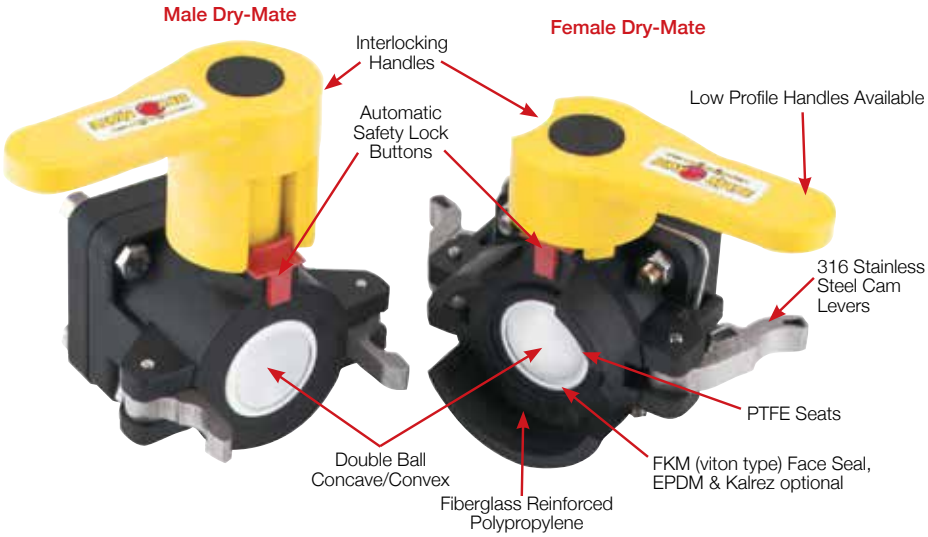


**Prevents Accidental Spills And Exposure!**
**Patented Double Ball Design With Cam Lever Connection!**

| POLY MALE DRY-MATE | | | | | |
|---|---|---|---|---|---|
| PART NO | DESCRIPTION | MAX PSI | PIPE SIZE | OPENING THRU BALL | QTY |
| DM150A | 1½" Male x FPT NPT | 100 | 1½" | 1½" | 1 |
| DM150AE | 1½" Male x FPT NPT w/EPDM Seals | 100 | 1½" | 1½" | 1 |
| DM150AT | 1½" Male x FPT NPT w/ Kalrez® Seals | 100 | 1½" | 1½" | 1 |
| DM150AB | 1½" Male x FPT BSP w/FKM Seals | 100 | 1½" | 1½" | 1 |
| DM150ABE | 1½" Male x FPT BSP w/EPDM Seals | 100 | 1½" | 1½" | 1 |
| DM150ABT | 1½" Male x FPT BSP w/ Kalrez® Seals | 100 | 1½" | 1½" | 1 |

| POLY FEMALE DRY-MATE | | | | | |
|---|---|---|---|---|---|
| PART NO | DESCRIPTION | MAX PSI | PIPE SIZE | OPENING THRU BALL | QTY |
| DM150D | 1½" Female x FPT NPT | 100 | 1½" | 1½" | 1 |
| DM150DE | 1½" Female w/EPDM Seals | 100 | 1½" | 1½" | 1 |
| DM150DT | 1½" Female w/Kalrez® Seals | 100 | 1½" | 1½" | 1 |
| DM150DB | 1½" Female x FPT BSP | 100 | 1½" | 1½" | 1 |
| DM150DBE | 1½" Female x FPT BSP w/EPDM Seals | 100 | 1½" | 1½" | 1 |
| DM150DBT | 1½" Female x FPT BSP w/ Kalrez® Seals | 100 | 1½" | 1½" | 1 |

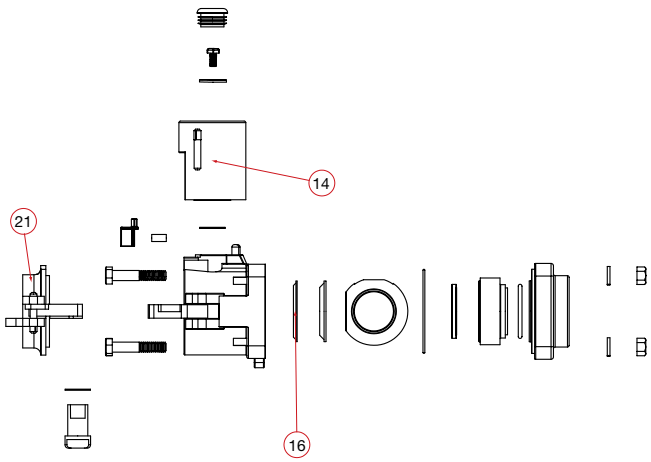


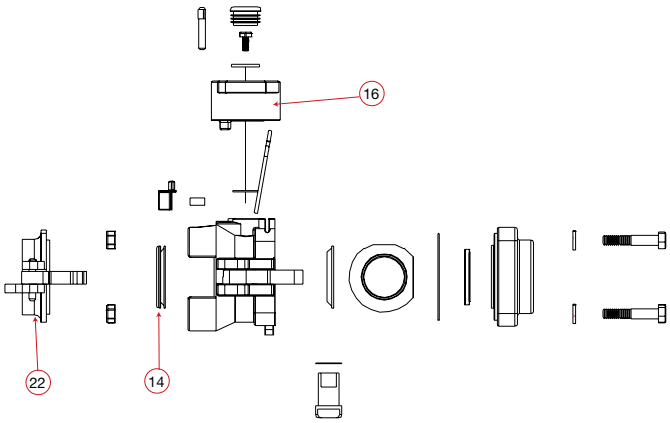


| REPLACEMENT PARTS DM150A | | | |
|---|---|---|---|
| ITEM | PART NO | DESCRIPTION | QTY |
| 14 | DM20153M | Male Handle | 1 |
| 14 | DB20153M | Low Profile Handle | 1 |
| 16 | DB20290 | FKM (viton type) Face Seal | 1 |
| 16 | DM20295A | EPDM Face Seal | 1 |
| 16 | DM20296 | Kalrez® Face Seal | 1 |
| 21 | DM200CAP | Dust Cap | 1 |
| KIT | DM20200A | Repair Kit | 1 |

| REPLACEMENT PARTS DM150D | | | |
|---|---|---|---|
| ITEM | PART NO | DESCRIPTION | QTY |
| 14 | DM20294A | FKM (viton type) Face Seal | 1 |
| 14 | DM20295A | EPDM Face Seal | 1 |
| 14 | DM20296 | Kalrez® Face Seal | 1 |
| 16 | DM20153F | Female Handle | 1 |
| 22 | DM200PL | Dust Plug | 1 |
| KIT | DM20200D | Repair Kit | 1 |

# 2" Polypropylene Dry-Disconnect



DRY MATE™ patented

## FEATURES

- Lightweight.
- Unrestricted 1½" flow.
- Minimal fluid spillage.
- Easy to use.
- Economical.
- Reduces risk of exposure.
- Wide range of chemical resistance.
- When properly installed and operated, the assembly will not accidentally separate while fluid is flowing; preventing costly mishaps.
- Spillage Data: 1½" = 2 ml and 2" = 2 ml

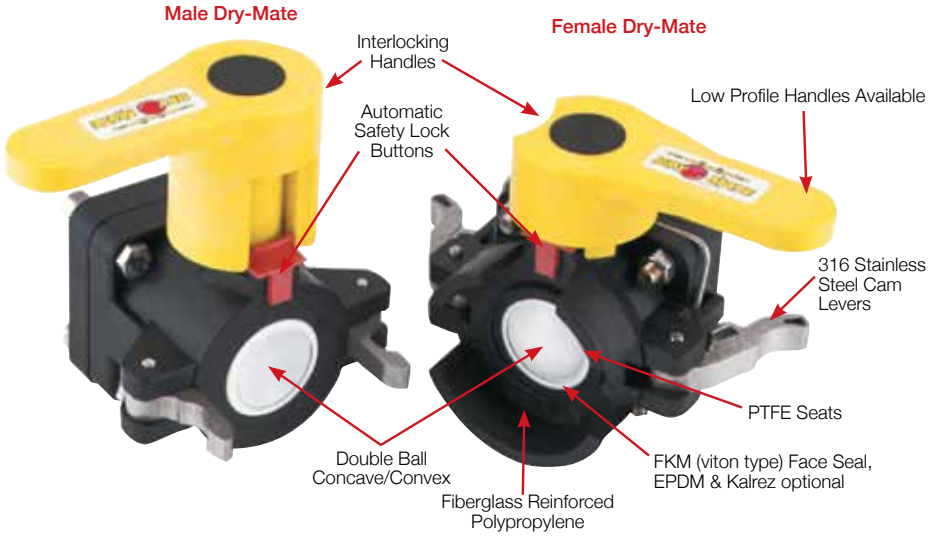


**Prevents Accidental Spills And Exposure!**
**Patented Double Ball Design With Cam Lever Connection!**

| POLY MALE DRY-MATE | | | | | |
|---|---|---|---|---|---|
| PART NO | DESCRIPTION | MAX PSI | PIPE SIZE | OPENING THRU BALL | QTY |
| DM200A | 2" Male x FPT NPT | 100 | 2" | 1½" | 1 |
| DM200AB | 2" Male x FPT BSP | 100 | 2" | 1½" | 1 |
| DM200AE | 2" Male x FPT NPT w/ EPDM Seals | 100 | 2" | 1½" | 1 |
| DM200AT | 2" Male x FPT NPT w/ Kalrez® Seals | 100 | 2" | 1½" | 1 |
| DMMT201A | 2" Male x Male NPT w/low profile handle | 100 | 2" | 1½" | 1 |
| DMMT201AE | 2" Male x Male NPT w/low profile handle w/EDPM Seals | 100 | 2" | 1½" | 1 |

| POLY FEMALE DRY-MATE | | | | | |
|---|---|---|---|---|---|
| PART NO | DESCRIPTION | MAX PSI | PIPE SIZE | OPENING THRU BALL | QTY |
| DM200D | 2" Female x FPT NPT | 100 | 2" | 1½" | 1 |
| DM200DB | 2" Female x FPT BSP | 100 | 2" | 1½" | 1 |
| DM200DE | 2" Female w/EPDM Seals | 100 | 2" | 1½" | 1 |
| DM200DT | 2" Female w/Kalrez® Seals | 100 | 2" | 1½" | 1 |

Repair kits contain:

| | | |
|---|---|---|
| Face Seal | Seats | Thrust Bearings |
| Ball | Body Gasket | Stem Bushings |

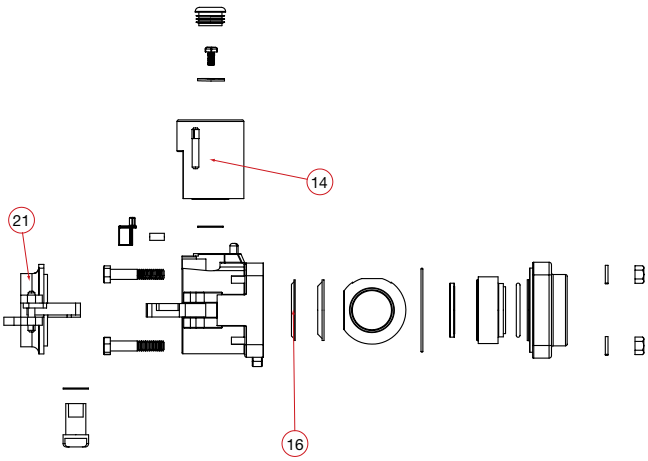


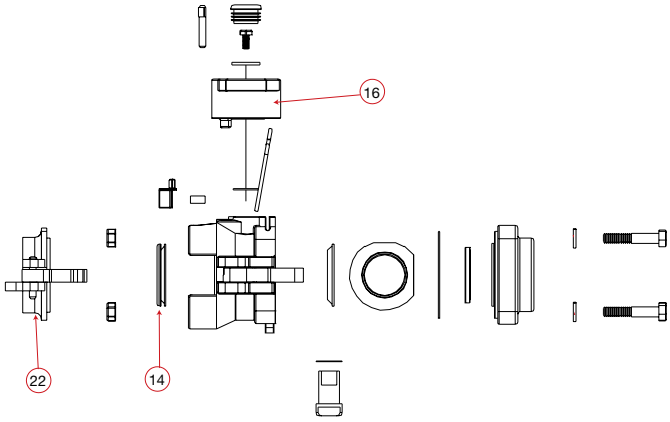


| REPLACEMENT PARTS DM200A | | | |
|---|---|---|---|
| ITEM | PART NO | DESCRIPTION | QTY |
| 14 | DM20153M | Male Handle | 1 |
| 14 | DB20153M | Low Profile Handle | 1 |
| 16 | DB20290 | FKM (viton type) Face Seal | 1 |
| 16 | DM20295A | EPDM Face Seal | 1 |
| 16 | DM20296 | Kalrez® Face Seal | 1 |
| 21 | DM200CAP | Dust Cap | 1 |
| N/S | DM20200A | Repair Kit | 1 |

| REPLACEMENT PARTS DM200D | | | |
|---|---|---|---|
| ITEM | PART NO | DESCRIPTION | QTY |
| 14 | DM20294A | FKM (viton type) Face Seal | 1 |
| 14 | DM20295A | EPDM Face Seal | 1 |
| 14 | DM20296 | Kalrez® Face Seal | 1 |
| 16 | DM20153F | Female Handle | 1 |
| 22 | DM200PL | Dust Plug | 1 |
| N/S | DM20200D | Repair Kit | 1 |

# 2" Polypropylene Full Port Dry-Disconnect



## FEATURES

- Lightweight.
- Unrestricted 2" flow.
- Minimal fluid spillage.
- Easy to use.
- Economical.
- Reduces risk of exposure.
- Wide range of chemical resistance.
- When properly installed and operated, the assembly will not accidentally separate while fluid is flowing; preventing costly mishaps.
- Spillage Data: 2" = 3 ml

DRY MATE™ patented

Male & Female shown coupled together.
Male & Female sold separately as shown below.

Female Dry-Mate
DM220D

Male Dry-Mate
DM220A

| POLY DRY-MATE | | | | | |
|---|---|---|---|---|---|
| PART NO | DESCRIPTION | MAX PSI | PIPE SIZE | OPENING THRU BALL | QTY |
| DM220A | 2" Male x FPT NPT | 225 | 2" | 2" | 1 |
| DM220D | 2" Female x FPT NPT | 225 | 2" | 2" | 1 |

Repair kits contain:

| | | |
|---|---|---|
| Face Seal | Seats | Thrust Bearings |
| Ball | Body Gasket | Stem Bushings |

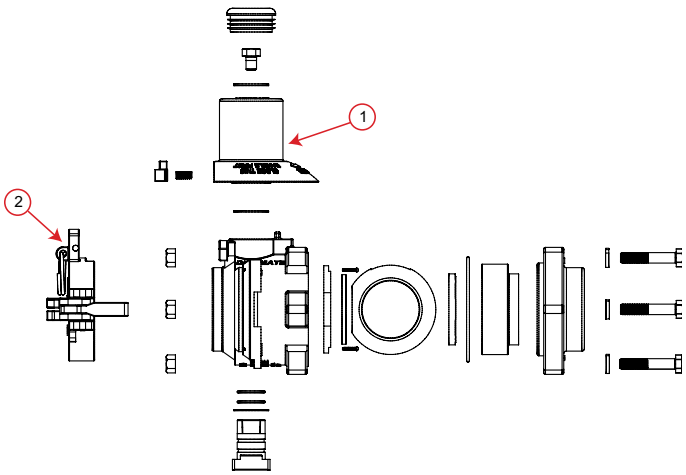


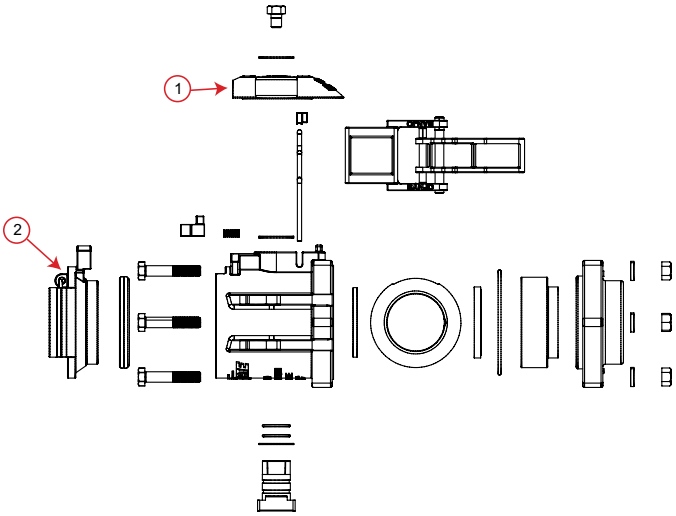


| REPLACEMENT PARTS DM220A | | | |
|---|---|---|---|
| ITEM | PART NO | DESCRIPTION | QTY |
| 1 | DM25153M | Male Handle | 1 |
| 2 | DM220CAP | Dust Cap | 1 |
| KIT | DM25200 | Repair Kit | 1 |

| REPLACEMENT PARTS DM220D | | | |
|---|---|---|---|
| ITEM | PART NO | DESCRIPTION | QTY |
| 1 | DM25153F | Female Handle | 1 |
| 2 | DM221PL | Dust Plug | 1 |
| KIT | DM25200 | Repair Kit | 1 |

# 3" Polypropylene Dry-Disconnect



DRY MATE™ patented

## FEATURES

- Lightweight.
- Unrestricted 3" flow.
- Minimal fluid spillage.
- Easy to use.
- Economical.
- Reduces risk of exposure.
- Wide range of chemical resistance.
- When properly installed and operated, the assembly will not accidentally separate while fluid is flowing; preventing costly mishaps.
- Spillage Data: 3" = 25 ml

Male & Female shown coupled together.
Male & Female sold separately as shown below.

| 3" FULL PORT POLY DRY-MATE | | | | | |
|---|---|---|---|---|---|
| PART NO | DESCRIPTION | MAX PSI | PIPE SIZE | OPENING THRU BALL | QTY |
| DM300AFP | 3" FP Male x 3" Female NPT Threads w/ FKM(viton type) Seals | 150 | 3" | 3" | 1 |
| DM300ABFP | 3" FP Male x 3" BSP Threads w/ FKM(viton type) Seals | 150 | 3" | 3" | 1 |
| DM300DFP | 3" FP Female x 3" Female NPT Threads w/ FKM(viton type) Seals | 150 | 3" | 3" | 1 |
| DM300DBFP | 3" FP Female x 3" BSP Threads w/ FKM(viton type) Seals | 150 | 3" | 3" | 1 |

Female Dry-Mate
DM300DFP

Male Dry-Mate
DM300AFP

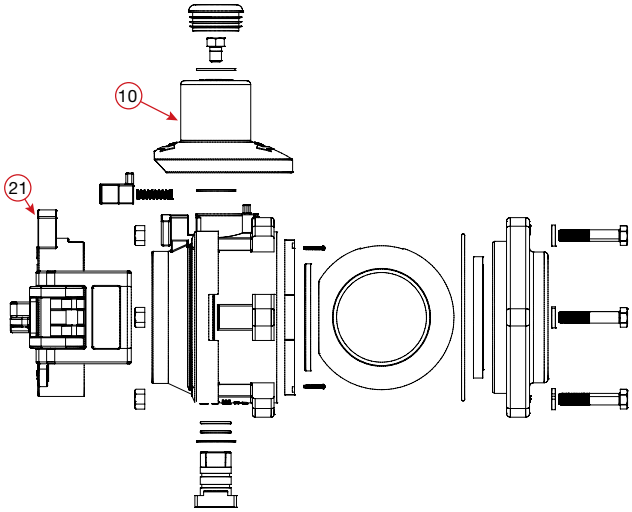


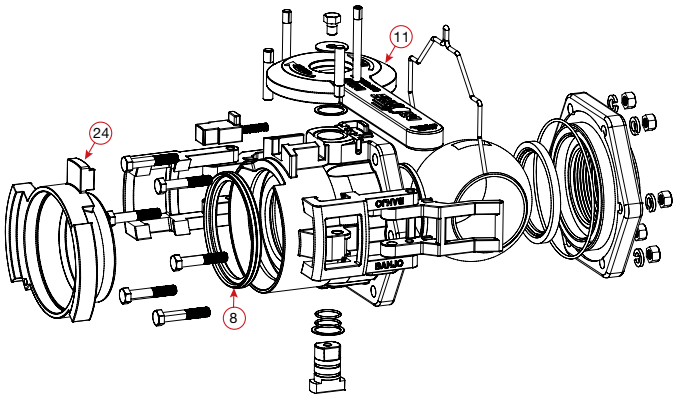


| REPLACEMENT PARTS DM300AFP | | | |
|---|---|---|---|
| ITEM | PART NO | DESCRIPTION | QTY |
| 10 | DM35153M | Handle | 1 |
| 21 | DM300CAP | Cap | 1 |
| KIT | DM35200 | Repair Kit | 1 |

| REPLACEMENT PARTS DM300DFP | | | |
|---|---|---|---|
| ITEM | PART NO | DESCRIPTION | QTY |
| 8 | DM35294 | Face Seal FKM (viton type) | 1 |
| 11 | DM35153F | Female Handle | 1 |
| 24 | DM300PL | Plug | 1 |
| KIT | DM35200 | Repair Kit | 1 |

# 1" Full Port Stainless Steel Dry-Disconnect

DRY MATE™ patented

## FEATURES

- 316 stainless steel construction.
- FKM (viton type), EPDM & Kalrez face seals.
- 100% PTFE ball seats.
- 300°F maximum operating temperature.
- Spillage Data: 1" = 1ml, 1½" and 2" = 2ml
- When properly installed and operated, the assembly will not accidentally separate while fluid is flowing; preventing costly mishaps.

## APPLICATIONS

- Agriculture
- Industrial
- Pharmaceutical
- Chemical processing

## SIZES

- Sizes: 1" Full Port, 1½" Full Port and 2" Standard Port (Female NPT & BSP Threads)



Female Dry-Mate

Male Dry-Mate

## PREVENTS ACCIDENTAL SPILLS AND EXPOSURE!

| 1" FULL PORT STAINLESS STEEL DRY-MATE | | | | | |
|---|---|---|---|---|---|
| PART NO | DESCRIPTION | MAX PSI | PIPE SIZE | OPENING THRU BALL | QTY |
| DM100ASS | 1" Male x NPT w/PTFE Seals | 150 | 1" | 1" | 1 |
| DM100ABSS | 1" Male x BSP w/PTFE Seals | 150 | 1" | 1" | 1 |
| DM100DSS | 1" Female x NPT w/FKM(viton type) Seals | 150 | 1" | 1" | 1 |
| DM100DSSE | 1" Female x NPT w/EPDM Seals | 150 | 1" | 1" | 1 |
| DM100DSST | 1" Female x NPT w/Kalrez®Seals | 150 | 1" | 1" | 1 |
| DM100DBSS | 1" Female x BSP w/FKM(viton type) Seals | 150 | 1" | 1" | 1 |
| DM100DBSSE | 1" Female x BSP w/EPDM Seals | 150 | 1" | 1" | 1 |
| DM100DBSST | 1" Female x BSP w/Kalrez®Seals | 150 | 1" | 1" | 1 |

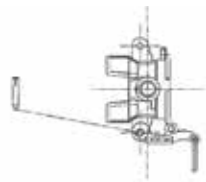

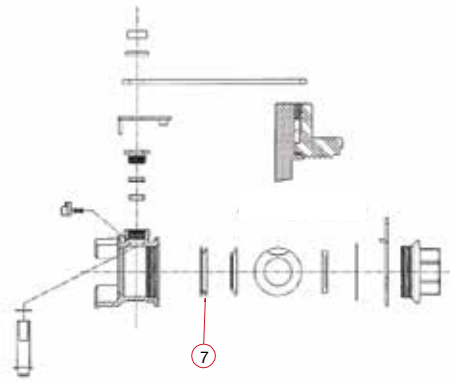


Repair kits contain:

| | | |
|---|---|---|
| Face Seal | Seats | Thrust Bearings |
| Ball | Body Gasket | Stem Bushings |

| REPLACEMENT PARTS DM100ASS | | | |
|---|---|---|---|
| ITEM | PART NO | DESCRIPTION | QTY |
| N/S | DM100CAP | Poly Cap | 1 |
| N/S | DM101SS | Repair Kit | 1 |

| REPLACEMENT PARTS DM100DSS | | | |
|---|---|---|---|
| ITEM | PART NO | DESCRIPTION | QTY |
| 7 | DM10294A | FKM (viton type) Face Seal | 1 |
| 7 | DM10295A | EPDM Face Seal | 1 |
| 7 | DM10296 | Kalrez® Face Seal | 1 |
| N/S | DM100PL | Poly Plug | 1 |
| KIT | DM102SSV | FKM (viton type) Repair Kit | 1 |
| KIT | DM102SSE | EPDM Repair Kit | 1 |
| KIT | DM102SST | Kalrez® Repair Kit | 1 |

# 1½" Full Port Stainless Steel Dry-Disconnect



DRY MATE™ patented

## FEATURES

- 316 stainless steel construction.
- FKM (viton type), EPDM & Kalrez face seals.
- 100% PTFE ball seats.
- 300°F maximum operating temperature.
- Spillage Data: 1" = 1ml, 1½" and 2" = 2ml
- When properly installed and operated, the assembly will not accidentally separate while fluid is flowing; preventing costly mishaps.

## APPLICATIONS

- Agriculture
- Industrial
- Pharmaceutical
- Chemical processing

## SIZES

- Sizes: 1" Full Port, 1½" Full Port (Female NPT & BSP Threads)

Female Dry-Mate

Male Dry-Mate

## PREVENTS ACCIDENTAL SPILLS AND EXPOSURE!

| 1½" FULL PORT STAINLESS STEEL DRY-MATE | | | | | |
|---|---|---|---|---|---|
| PART NO | DESCRIPTION | MAX PSI | PIPE SIZE | OPENING THRU BALL | QTY |
| DM150ASS | 1½" Male x NPT w/PTFE Seals | 150 | 1½" | 1½" | 1 |
| DM150ABSS | 1½" Male x BSP w/PTFE Seals | 150 | 1½" | 1½" | 1 |
| DM150DSS | 1½" Female x NPT w/FKM (viton type) Seals | 150 | 1½" | 1½" | 1 |
| DM150DSSE | 1½" Female x NPT w/ EPDM Seals | 150 | 1½" | 1½" | 1 |
| DM150DSST | 1½" Female x NPT w/ Kalrez® Seals | 150 | 1½" | 1½" | 1 |
| DM150DBSS | 1½" Female x BSP w/FKM (viton type) Seals | 150 | 1½" | 1½" | 1 |
| DM150DBSSE | 1½" Female x BSP w/ EPDM Seals | 150 | 1½" | 1½" | 1 |
| DM150DBSST | 1½" Female x BSP w/ Kalrez® Seals | 150 | 1½" | 1½" | 1 |

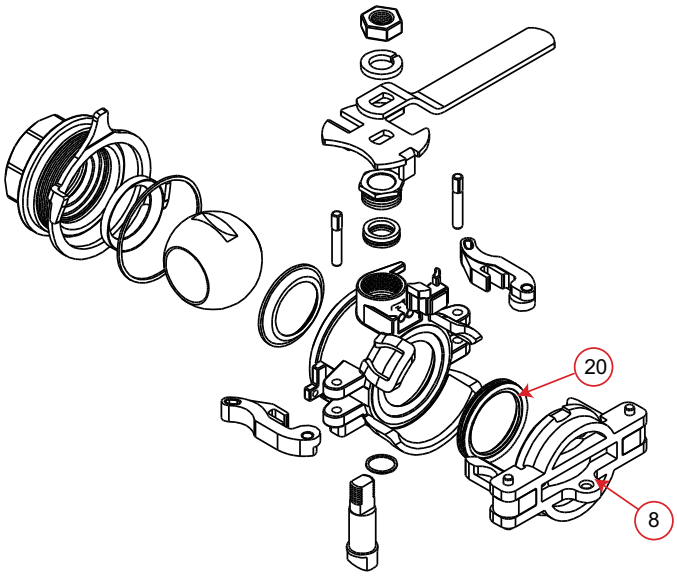


Repair kits contain:

| | | |
|---|---|---|
| Face Seal | Seats | Thrust Bearings |
| Ball | Body Gasket | Stem Bushings |

| REPLACEMENT PARTS DM150ASS | | | |
|---|---|---|---|
| ITEM | PART NO | DESCRIPTION | QTY |
| N/S | DM200ACAP | Dust Cap | 1 |
| N/S | DM201SS | Repair Kit | 1 |

| REPLACEMENT PARTS DM150DSS | | | |
|---|---|---|---|
| ITEM | PART NO | DESCRIPTION | QTY |
| 18 | DM20294A | FKM (viton type) Face Seal | 1 |
| 18 | DM20295A | EPDM Face Seal | 1 |
| 18 | DM20296 | Kalrez® Face Seal | 1 |
| 21 | DM200APL | Dust Plug | 1 |
| KIT | DM202SSV | FKM (viton type) Repair Kit | 1 |
| KIT | DM202SSE | EPDM Repair Kit | 1 |
| KIT | DM202SST | Kalrez® Repair Kit | 1 |

# 2" Stainless Steel Dry-Disconnect

## FEATURES

- 316 stainless steel construction.
- FKM (viton type), EPDM & Kalrez face seals.
- 100% PTFE ball seats.
- 300°F maximum operating temperature.
- Spillage Data: 1" = 1ml, 1½" and 2" = 2ml
- When properly installed and operated, the assembly will not accidentally separate while fluid is flowing; preventing costly mishaps.

DRY MATE™ patented

## APPLICATIONS

- Agriculture
- Industrial
- Pharmaceutical
- Chemical processing

## SIZES

- Sizes: 2" Standard Port (Female NPT & BSP Threads)

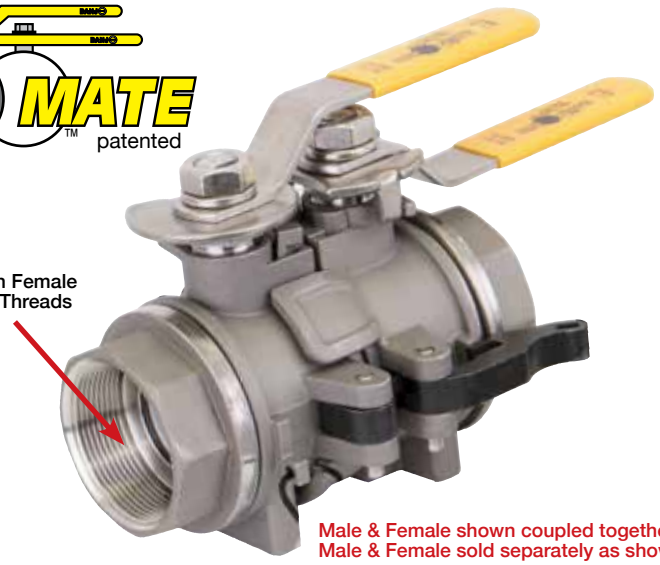


Male & Female shown coupled together.
Male & Female sold separately as shown below.



| 2" STAINLESS STEEL DRY-MATE | | | | | |
|---|---|---|---|---|---|
| PART NO | DESCRIPTION | MAX PSI | PIPE SIZE | OPENING THRU BALL | QTY |
| DM200ASS | 2" Male x NPT w/PTFE Seals | 300 | 2" | 1½" | 1 |
| DM200ABSS | 2" Male x BSP w/PTFE Seals | 150 | 2" | 1½" | 1 |
| DM200DSS | 2" Female x NPT w/FKM (viton type) Seals | 300 | 2" | 1½" | 1 |
| DM200DSSE | 2" Female x NPT w/EPDM Seals | 150 | 2" | 1½" | 1 |
| DM200DSST | 2" Female x NPT w/Kalrez® Seals | 150 | 2" | 1½" | 1 |
| DM200DBSS | 2" Female x BSP w/FKM (viton type) Seals | 150 | 2" | 1½" | 1 |
| DM200DBSSE | 2" Female x BSP w/EPDM Seals | 150 | 2" | 1½" | 1 |
| DM200DBSST | 2" Female x BSP w/Kalrez® Seals | 150 | 2" | 1½" | 1 |

Female Dry-Mate

Male Dry-Mate

Repair kits contain:

| | | |
|---|---|---|
| Face Seal | Seats | Thrust Bearings |
| Ball | Body Gasket | Stem Bushings |

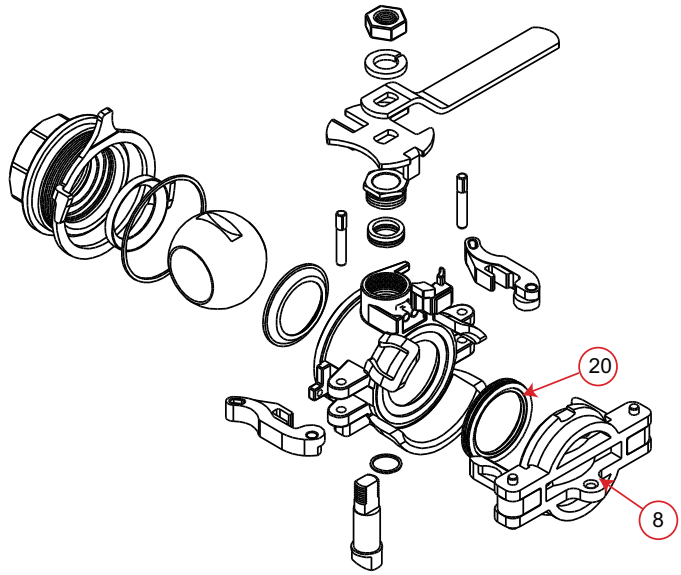


| REPLACEMENT PARTS DM200ASS | | | |
|---|---|---|---|
| ITEM | PART NO | DESCRIPTION | QTY |
| N/S | DM200ACAP | Dust Cap | 1 |
| N/S | DM201SS | Repair Kit | 1 |

| REPLACEMENT PARTS DM200DSS | | | |
|---|---|---|---|
| ITEM | PART NO | DESCRIPTION | QTY |
| 18 | DM20294A | FKM (viton type) Face Seal | 1 |
| 18 | DM20295A | EPDM Face Seal | 1 |
| 18 | DM20296 | Kalrez® Face Seal | 1 |
| 21 | DM200APL | Dust Plug | 1 |
| N/S | DM202SSV | FKM (viton type) Repair Kit | 1 |
| N/S | DM202SSE | EPDM Repair Kit | 1 |
| N/S | DM202SST | Kalrez® Repair Kit | 1 |

# 2" Full Port Stainless Steel Dry-Disconnect



## FEATURES

- 316 stainless steel construction.
- FKM (viton type) standard, EPDM face seals available.
- 100% PTFE ball seats.
- 300°F maximum operating temperature.
- Spillage data: Less than 1cc.
- Filled valve for no product residue.
- 20 Degrees rotation either direction to ease coupling male and female halves.
- When properly installed and operated, the assembly will not accidentally separate while fluid is flowing; preventing costly mishaps.

DRY MATE™ patented

Male & Female shown coupled together.
Male & Female sold separately as shown below.

## APPLICATIONS

- Agriculture
- Industrial
- Pharmaceutical
- Chemical processing

## SIZES

- Sizes: 2" Full Port (Female NPT & BSP Threads)

| 2" FULL PORT STAINLESS STEEL DRY-MATE | | | | | |
|---|---|---|---|---|---|
| PART NO | DESCRIPTION | MAX PSI | PIPE SIZE | OPENING THRU BALL | QTY |
| DM220ASS | 2" FP Male x NPT Threads w/ all PTFE Seals | 300 | 2" | 2" | 1 |
| DM220DSS | 2" FP Female x NPT Threads w/ FKM (viton type) Seals | 300 | 2" | 2" | 1 |
| DM220DSSE | 2" FP Female x NPT Threads w/EPDM Seals | 300 | 2" | 2" | 1 |
| DM220DSST | 2" FP Female x NPT Threads w/Kalrez® Seals | 300 | 2" | 2" | 1 |
| DM220ABSS | 2" FP Male x BSP Threads w/ all PTFE Seals | 300 | 2" | 2" | 1 |
| DM220DBSS | 2" FP Female x BSP Threads w/ FKM (viton type) Seals | 300 | 2" | 2" | 1 |

Male Dry-Mate

Female Dry-Mate

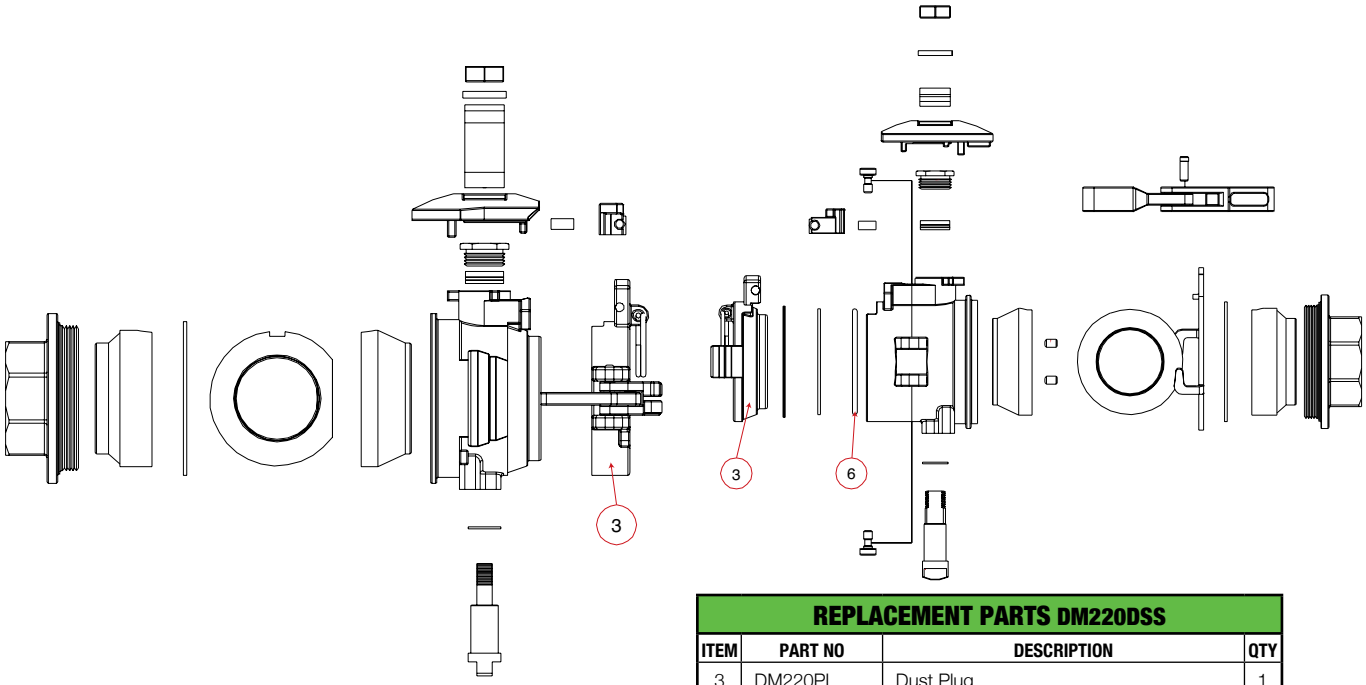


| REPLACEMENT PARTS DM220ASS | | | |
|---|---|---|---|
| ITEM | PART NO | DESCRIPTION | QTY |
| 3 | DM220CAP | Dust Cap | 1 |
| KIT | DM221SS | Repair Kit | 1 |

| REPLACEMENT PARTS DM220DSS | | | |
|---|---|---|---|
| ITEM | PART NO | DESCRIPTION | QTY |
| 3 | DM220PL | Dust Plug | 1 |
| 6 | DM25294E | 2" FP EPDM Face Seal | 1 |
| 6 | DM25294 | 2" FP FKM(viton type) Face Seal (new style) | 1 |
| 6 | DM25294T | 2" FP Kalrez® Face Seal | 1 |
| KIT | DM222SS | Repair Kit | 1 |

# Closed Transfer System

**FEATURES**

- Allows to safely and properly flush chemical containers.

CTS200D

CTS200AR

*Valve (LV050V) & fitting(050F) not included.

| CLOSED TRANSFER SYSTEM ADAPTERS | | | | |
|---|---|---|---|---|
| PART NO | DESCRIPTION | MAX PSI | PIPE SIZE | QTY |
| CTS200AR | Closed Mix Bottle Adapter | 40 | 63 mm btl | 1 |
| CTS200D | Tank Adapter w/2" Male NPT Threads | 40 | 2" | 1 |



# IBC Spin Weld Ball Valves

W230237

W230238

W230239

W230240

| SPINWELD BALL VALVES | | | | | | | |
|---|---|---|---|---|---|---|---|
| PART NO | DESCRIPTION | GASKET MATERIAL | COLLAR FITS | COLLAR NUMBER | COLLAR ID | PSI | QTY |
| W230237 | 2" Poly Spinweld Valve w/NPT Outlet & Cap & Foil Seal | FKM (viton type) | MAUSER® | V22283 C & D | 2¼" | 20 | 24/box |
| W230238 | 2" Poly Spinweld Valve w/QDC Outlet & Cap & Foil Seal | FKM (viton type) | MAUSER® | V22283 C & D | 2¼" | 20 | 24/box |
| W230239 | 2" Poly Spinweld Valve w/NPT Outlet & Cap & Foil Seal | EPDM | MAUSER® | V22283 C & D | 2¼" | 20 | 24/box |
| W230240 | 2" Poly Spinweld Valve w/QDC Outlet & Cap & Foil Seal | EPDM | MAUSER® | V22283 C & D | 2¼" | 20 | 24/box |

# Spin Weld Ball Valves





## FEATURES

- PTFE valve seats.
- FKM (viton type) stem o-rings.
- Polypropylene.
- Zinc alloy collar.
- FKM (viton type), EPDM, and Santoprene collar gaskets available for most valves.
- Handles close in either direction.

*See caps on page 66!*

WSF210FSA SCHUTZ®

WSMT210FSA SCHUTZ®

| SPINWELD BALL VALVES | | | | | | | |
|---|---|---|---|---|---|---|---|
| PART NO | DESCRIPTION | GASKET MATERIAL | COLLAR FITS | COLLAR NUMBER | COLLAR ID | PSI | QTY |
| WSF210FSA | 2" Poly Spinweld Valve w/QDC Outlet, Foil Seal & Cap | Santoprene | SCHUTZ® | V20280 A & B | 2¾" | 50 | 24/box |
| WSF210FSAV | 2" Poly Spinweld Valve w/QDC Outlet, Foil Seal & Cap | FKM (viton type) | SCHUTZ® | V20280 A & B | 2¾" | 50 | 24/box |
| WSMT210FSA | 2" Poly Spinweld Valve w/NPT Outlet, Foil Seal & Cap | Santoprene | SCHUTZ® | V20280 A & B | 2¾" | 225 | 24/box |
| WSMT210FSAV | 2" Poly Spinweld Valve w/NPT Outlet, Foil Seal & Cap | FKM (viton type) | SCHUTZ® | V20280 A & B | 2¾" | 225 | 24/box |

**Note: Please contact our sales department for optional gasket materials.**

**For *faster* shipping, order in box quantities.**

# FDA Union Valves

**FEATURES**

- Precision molded in glass reinforced polypropylene, for strength and chemical resistance.
- PTFE seats for smooth operation and proper sealing characteristics.
- Double EPDM O-rings in stem area for extra sealing protection.
- Interlocking body and end plate to allow easy thread connection when installing valves.

MBP200

NIP2101

| UNION VALVE ADAPTERS | | | |
|---|---|---|---|
| PART NO | DESCRIPTION | PSI | QTY |
| MBP200 | 2" Buttress x 2" NPT Assembly-White | 200 | 1 |
| NIP2101 | 2" NPT x BSP Nipple-White | 300 | 1 |

| UNION VALVE | | | |
|---|---|---|---|
| PART NO | DESCRIPTION | PSI | QTY |
| UV204FPFD | 2" FDA Union Valve-EPDM | 225 | 1 |

# Poly IBC/Spray Tank Lids

| 6" IBC SOLID TANK LIDS | | | |
|---|---|---|---|
| PART NO | DESCRIPTION | GASKET | QTY |
| TL650S | 6" Solid Tank Lid w/Gasket | Santoprene | 1 |
| TL650E | 6" Solid Tank Lid w/Gasket | EPDM | 1 |

| 6" IBC TANK LIDS W/UNVENTED 2" PLUG | | | |
|---|---|---|---|
| PART NO | DESCRIPTION | GASKET | QTY |
| TL651S | 6" Tank Lid w/Unvented 2" Plug w/Gasket | Santoprene | 1 |

| 6" IBC TANK LIDS W/VENTED 2" PLUG | | | |
|---|---|---|---|
| PART NO | DESCRIPTION | GASKET | QTY |
| TL652S | 6" Tank Lid w/Vented 2" Plug w/Gasket | Santoprene | 1 |
| TL652E | 6" Tank Lid w/Vented 2" Plug w/Gasket | EPDM | 1 |

| 5½" LIDS FOR SPRAY TANKS | | |
|---|---|---|
| PART NO | DESCRIPTION | QTY |
| TL600C | 5½" Vented Tank Lid | 1 |

## Tank Lids

**FEATURES**
- Maximum air flow through vent channels.
- Airflow equivalent to a 3" hole.
- No secondary venting needed.
- Baffled vents.

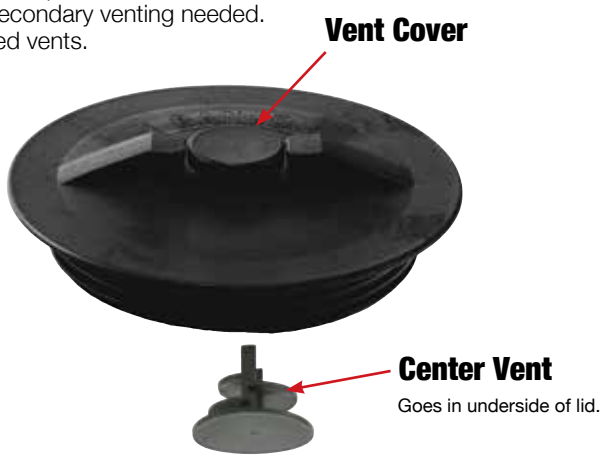


| 10" VENTED TANK LIDS | | |
|---|---|---|
| PART NO | DESCRIPTION | QTY |
| TLVA10 | 10" Vented Tank Lid & Ring Assembly (new style) | 1 |
| TLA10 | 10" Vented Tank Lid & Ring Assembly (old style) | 1 |
| TLV10R | 10" Vented Tank Lid Assembly w/o Ring | 1 |
| TLV1 | Vent Cover | 1 |
| TLV2 | Center Vent | 1 |

## Poly Siphon Tubes

**FEATURES**
- Full flow size.
- Long length.
- Male NPT threads.

| POLY SIPHON TUBES | | |
|---|---|---|
| PART NO | DESCRIPTION | QTY |
| ST200 | 2" Poly Siphon Tube | 1 |
| ST300 | 3" Poly Siphon Tube | 1 |

# IBC Polypropylene Accessories



DIN60 (Buttress) Thread

| 2" BUTTRESS X 2" MALE NPT | | | | |
|---|---|---|---|---|
| PART NO | DESCRIPTION | GASKET | PSI | QTY |
| TA283 | 2" Buttress x 2" Male NPT Threads w/ Gasket | Santoprene | 300 | 1 |

DIN60 (Buttress) Thread

| 2" BUTTRESS X 2" MALE ADAPTER | | | | |
|---|---|---|---|---|
| PART NO | DESCRIPTION | GASKET | PSI | QTY |
| TA283QD | 2" Buttress x 2" Male Adapter QDC w/ Gasket | Santoprene | 150 | 1 |

201FPT

211FPT

60FDIN

| 2" FEMALE NPT CAP | | | |
|---|---|---|---|
| PART NO | DESCRIPTION | PSI | QTY |
| 201FPT | 2" Female NPT Cap | 20 | 1 |
| 211FPT | 2" Female NPT Cap | N/A | 1 |
| 60FDIN | 60 MM DIN Cap (Buttress Thread) | N/A | 1 |

231MPT

TL6531

| 2" VENTED & NON-VENTED BUNG PLUGS | | |
|---|---|---|
| PART NO | DESCRIPTION | QTY |
| 231MPT | 2" MPT Solid Bung w/EPDM Gasket | 1 |
| 231MPTBN | 2" MPT Solid Bung w/Buna Nitrile Gasket | 1 |
| TL6531 | 2" Vented Plug w/EPDM Gasket | 1 |

V20207

| LANYARD | | |
|---|---|---|
| PART NO | DESCRIPTION | QTY |
| V20207 | 11" Polyurethane Lanyard | 1 |

200CAPSH

200CAP

| 2" CAM LEVER DUST CAP | | | |
|---|---|---|---|
| PART NO | DESCRIPTION | PSI | QTY |
| 200CAPSH | 2" Cam Lever Dust Cap w/short arms | 200 | 1 |
| 200CAP | 2" Cam Lever Dust Cap | 200 | 1 |

201CAPSH

202CAP

| 2" CAM LEVER DUST CAP | | | |
|---|---|---|---|
| PART NO | DESCRIPTION | PSI | QTY |
| 201CAPSH | 2" Cam Lever Dust Cap w/short arms & rings | 200 | 1 |
| 202CAP | 2" Cam Lever Dust Cap | 20 | 1 |

# Poly Bolted Tank Flanges



**FEATURES**

- Stainless steel bolts.
- Bolt head plugs sealed ultrasonically.
- Glass reinforced polypropylene.
- EPDM gaskets standard & FKM (viton type) available.

BF300

| POLY BOLTED TANK FLANGES | | | |
|---|---|---|---|
| PART NO | DESCRIPTION | PSI | QTY |
| BF075 | ¾" x 1" Threaded EPDM Flange | 150 | 27 |
| BF100 | 1" x 1" Threaded EPDM Flange | 150 | 27 |
| BF100V | 1" x 1" Threaded FKM (viton type) Flange | 150 | 27 |
| BF125 | 1¼" x 1" Threaded EPDM Flange | 150 | 27 |
| BF150 | 1½" x 2" Threaded EPDM Flange | 150 | 27 |
| BF200 | 2" x 2" Threaded EPDM Flange | 150 | 27 |
| BF200V | 2" x 2" Threaded FKM (viton type) Flange | 150 | 27 |
| BF220 | 2" x 2" Full Port Threaded EPDM Flange | 150 | 27 |
| BF220V | 2" x 2" Full Port Threaded FKM (viton type) Flange | 150 | 27 |
| BF300 | 3" x 3" Threaded EPDM Flange | 150 | 16 |
| BF300 | 3" x 3" Threaded EPDM Flange | 150 | 16 |

| BOLTED TANK FLANGE GASKETS | | | |
|---|---|---|---|
| PART NO | DESCRIPTION | PSI | QTY |
| BF100GE | 1" Full EPDM Gasket | N/A | 1 |
| BF100GV | 1" Full FKM(viton type) Gasket | N/A | 1 |
| BF200GE | 1½" & 2" Full EPDM Gasket | N/A | 1 |
| BF200GV | 1½" & 2" Full FKM(viton type) Gasket | N/A | 1 |
| BF220GE | 2" Full Port EPDM Gasket | N/A | 1 |
| BF220GV | 2" Full Port FKM(viton type) Gasket | N/A | 1 |
| BF300GE | 3" Full EPDM Gasket | N/A | 1 |
| BF300GV | 3" Full FKM(viton type) Gasket | N/A | 1 |

* WARNING: Do not tighten tank flange bolts more than 12 ft pounds.

**¾" — 2"**

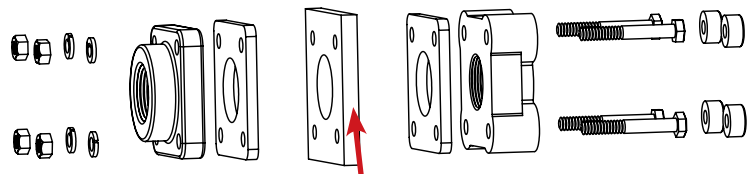

Tank Wall

**3"**

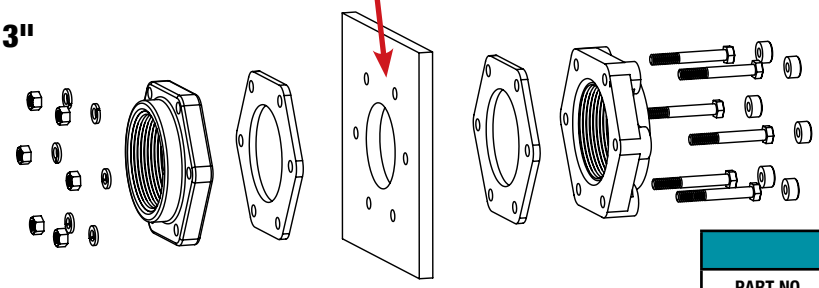

| BANJO MAN | | |
|---|---|---|
| PART NO | DESCRIPTION | QTY |
| BANJOMAN | 18" x 29"- Assembly Required | 1 |

# Poly Bolted "Bottom Drain"™ Tank Flanges

PATENTED



## FEATURES

- Stainless steel bolts.
- Bolt head plugs sealed ultrasonically.
- Glass reinforced polypropylene.
- EPDM gaskets standard.
  FKM (viton type) available.
- Longer bolts available.

- **Allows 100% Rinse Free – No Sediment Build Up!**
- **Excellent for avoiding herbicide cross contamination!**
- **Bolted design for superior strength!**
- **Fits most cone bottom & chemical inductor tanks, 30 gallons and larger.**

BF300BD

**For *faster* shipping, order in box quantities.**

| POLY BOTTOM DRAIN BOLTED TANK FLANGES | | | |
|---|---|---|---|
| PART NO | DESCRIPTION | PSI | QTY |
| BF075BD | ¾" x 1" Threaded EPDM Flange | 150 | 27 |
| BF075BDV | ¾" x 1" Threaded FKM (viton type) Flange | 150 | 27 |
| BF100BD | 1" x 1" Threaded EPDM Flange | 150 | 27 |
| BF125BDV | 1¼" x 1" Threaded FKM (viton type) Flange | 150 | 27 |
| BF150BD | 1½" x 2" Threaded EPDM Flange | 150 | 27 |
| BF200BD | 2" x 2" Threaded EPDM Flange | 150 | 27 |
| BF220BD | 2" x 2" Full Port Threaded EPDM Flange | 150 | 27 |
| BF300BD | 3" x 3" Threaded EPDM Flange | 150 | 16 |

| POLY BOTTOM DRAIN BOLTED TANK FLANGE GASKETS | | | |
|---|---|---|---|
| PART NO | DESCRIPTION | PSI | QTY |
| BF100GE | ¾", 1" & 1¼" Full EPDM Gasket | N/A | 1 |
| BF100GV | ¾", 1" & 1¼" Full FKM(viton type) Gasket | N/A | 1 |
| BF100GRE | ¾", 1" & 1¼" Foot EPDM Gasket | N/A | 4 |
| BF100GRV | ¾", 1" & 1¼" Foot FKM(viton type) Gasket | N/A | 4 |
| BF200GE | 1½" & 2" Full EPDM Gasket | N/A | 1 |
| BF200GV | 1½" & 2" Full FKM(viton type) Gasket | N/A | 1 |
| BF200GFV | 1½" & 2" Std. Port, 2" Full Port Foot FKM (viton type) Gasket | N/A | 4 |
| BF220GE | 2" Full Port EPDM Gasket | N/A | 1 |
| BF220GV | 2" Full Port FKM(viton type) Gasket | N/A | 1 |
| BF300GE | 3" Full EPDM Gasket | N/A | 1 |
| BF300GV | 3" Full FKM(viton type) Gasket | N/A | 1 |
| BF300GFE | 3" Foot EPDM Gasket | N/A | 6 |
| BF300GFV | 3" Foot FKM(viton type) Gasket | N/A | 6 |

# Bulkhead Tank Fittings



### FEATURES

- Double sided female NPT threads.
- Available with EPDM or FKM (viton type) gasket.

### FEATURES

- Double sided female NPT threads.
- Standard with EPDM gasket, FKM (viton type) available.

| POLY BULKHEAD FITTINGS | | | | |
|---|---|---|---|---|
| PART NO | DESCRIPTION | HOLE SIZE | PSI | QTY |
| TF050 | ½" Poly Bulkhead EPDM Tank Fitting | 1⅝" | 300 | 10/bag |
| TF075 | ¾" Poly Bulkhead EPDM Tank Fitting | 1⅝" | 300 | 10/bag |
| TF075V | ¾" Poly Bulkhead FKM(viton type) Tank Fitting | 1⅝" | 300 | 1 |
| TF100 | 1" Poly Bulkhead EPDM Tank Fitting | 2¼" | 300 | 10/bag |
| TF125 | 1¼" Poly Bulkhead EPDM Tank Fitting | 2¼" | 300 | 1 |
| TF150 | 1½" Poly Bulkhead EPDM Tank Fitting | 3" | 300 | 1 |
| TF200 | 2" Poly Bulkhead EPDM Tank Fitting | 3" | 300 | 1 |
| TF200V | 2" Poly Bulkhead FKM(viton type) Tank Fitting | 3" | 300 | 1 |
| TF220 | 2" Poly Bulkhead EPDM Tank Fitting | 3¼" | 300 | 1 |
| TF300 | 3" Poly Bulkhead EPDM Tank Fitting | 4½" | 300 | 1 |
| TF400 | 4" Poly Bulkhead EPDM Tank Fitting | 5¾" | 225 | 1 |

| 316 SS BULKHEAD FITTINGS | | | | |
|---|---|---|---|---|
| PART NO | DESCRIPTION | HOLE SIZE | PSI | QTY |
| TF038SS | ⅜" SS Bulkhead Tank Fitting | 1" | 300 | 1 |
| TF050SS | ½" SS Bulkhead Tank Fitting | 1⅜" | 300 | 1 |
| TF075SS | ¾" SS Bulkhead Tank Fitting | 1⅝" | 300 | 1 |
| TF100SS | 1" SS Bulkhead Tank Fitting | 2¼" | 300 | 1 |
| TF125SS | 1¼" SS Bulkhead Tank Fitting | 2¼" | 300 | 1 |
| TF150SS | 1½" SS Bulkhead Tank Fitting | 3" | 300 | 1 |
| TF200SS | 2" SS Bulkhead Tank Fitting | 3" | 300 | 1 |
| TF220SS | 2" SS Bulkhead Tank Fitting | 3¼" | 300 | 1 |
| TF300SS | 3" SS Bulkhead Tank Fitting | 4⅜" | 300 | 1 |

| BULKHEAD GASKETS | | | | | |
|---|---|---|---|---|---|
| PART NO | DESCRIPTION | HOLE SIZE | FITS POLY | FITS SS | QTY |
| 100G | ⅜" Poly Bulkhead EPDM Gasket | 1" | | TF038SS | 100/bag |
| 100GV | ⅜" Poly Bulkhead FKM(viton type) Gasket | 1" | | TF038SS | 100/bag |
| TF138GV | ½" Poly Bulkhead FKM(viton type) Gasket | 1⅜" | | TF050SS | 100/bag |
| 150G | ½" & ¾" Poly Bulkhead EPDM Gasket | 1⅝" | TF050 & TF075 | TF075SS | 100/bag |
| 150GV | ½" & ¾" Poly Bulkhead FKM(viton type) Gasket | 1⅝" | TF050 & TF075 | TF075SS | 50/bag |
| 200G | 1" & 1¼" Poly Bulkhead EPDM Gasket | 2¼" | TF100 & TF125 | TF100SS & TF125SS | 50/bag |
| 200GV | 1" & 1¼" Poly Bulkhead FKM(viton type) Gasket | 2¼" | TF100 & TF125 | TF100SS & TF125SS | 50/bag |
| 300G | 1½" & 2" Poly Bulkhead EPDM Gasket | 3" | TF200 & TF150 | TF200SS & TF150SS | 25/bag |
| 300GV | 1½" & 2" Poly Bulkhead FKM(viton type) Gasket | 3" | TF200 & TF150 | TF200SS & TF150SS | 25/bag |
| TF220G | 2" Poly Bulkhead EPDM Gasket | 3¼" | TF220 | TF220SS | 50/bag |
| TF220GV | 2" Poly Bulkhead FKM(viton type) Gasket | 3¼" | TF220 | TF220SS | 50/bag |
| TF300 | 3" Poly Bulkhead EPDM Gasket | 4½" | TF300 | TF300SS | 50/bag |
| TF300GV | 3" Poly Bulkhead FKM(viton type) Gasket | 4½" | TF300 | TF300SS | 20/bag |
| TF400G | 4" Poly Bulkhead EPDM Gasket | 5¾" | TF400 | | 1 |
| TF400GV | 4" Poly Bulkhead FKM(viton type) Gasket | 5¾" | TF400 | | 1 |

**Must order in bag quantities for quick and easy shipping and receiving of your order.**

# Anti Vortex Vent Cap

**FEATURES**

- Male NPT.
- Glass reinforced polypropylene.
- 304 stainless steel screen (optional).

| POLY ANTI VORTEX VENT CAPS | | | | | |
|---|---|---|---|---|---|
| PART NO | DESCRIPTION | BORE SIZE | BORE AREA | VENT AREA | QTY |
| VC200 | 2" Anti Vortex Vent Cap w/No Screen | 2" | 3.1 sq in | 3.9 sq in | 1 |
| VC230 | 2" Anti Vortex Vent Cap w/12 Mesh 304 SS Screen | 2" | 3.1 sq in | 3.9 sq in | 1 |
| VC300 | 3" Anti Vortex Vent Cap w/No Screen | 3" | 7 sq in | 9 sq in | 1 |
| VC330 | 3" Anti Vortex Vent Cap w/10 Mesh 304 SS Screen | 3" | 7 sq in | 9 sq in | 1 |

Tank flange sold separately on page 68.



# Anti Vortex Tank Flange

**FEATURES**

- Standard w/FKM (viton type).
- Prevents swirl in bottom of tank.

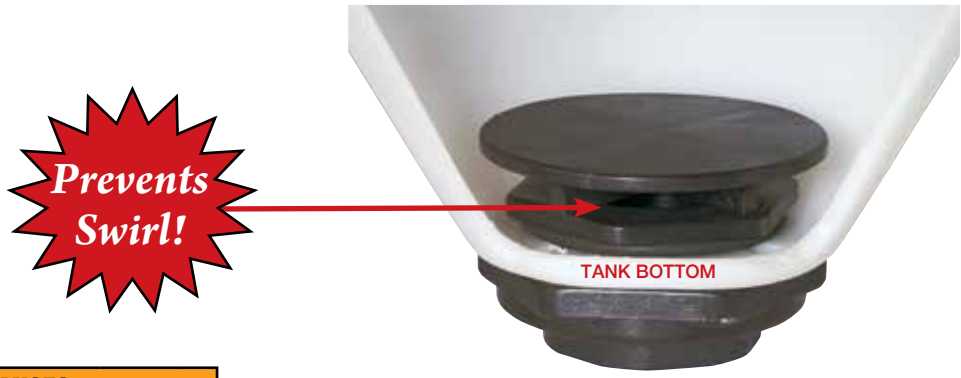


| ANTI VORTEX TANK FLANGES | | | |
|---|---|---|---|
| PART NO | DESCRIPTION | HOLE SIZE | QTY |
| TF100AV | 1" Anti Vortex Tank Flanges | 2¼" | 1 |
| TF125AV | 1¼" Anti Vortex Tank Flanges | 2¼" | 1 |
| TF150AV | 1½" Anti Vortex Tank Flanges | 3" | 1 |
| TF200AV | 2" Anti Vortex Tank Flanges | 3" | 1 |

# Polypropylene Class 150 ANSI Flanges



## FEATURES

- Glass reinforced polypropylene.
- Heavy duty.

| 150# THREADED ANSI FLANGES | | |
|---|---|---|
| PART NO | DESCRIPTION | QTY |
| AF100 | 1" Female Thread ANSI Flange | 1 |
| AF150 | 1½" Female Thread ANSI Flange | 1 |
| AF200 | 2" Female Thread ANSI Flange | 1 |
| AF300 | 3" Female Thread ANSI Flange | 1 |
| AF400 | 4" Female Thread ANSI Flange | 1 |

| 150# BLIND ANSI FLANGES | | |
|---|---|---|
| PART NO | DESCRIPTION | QTY |
| AFB200 | 2" Blind ANSI Flange | 1 |
| AFB300 | 3" Blind ANSI Flange | 1 |
| AFB400 | 4" Blind ANSI Flange | 1 |

AF150G

AF200G

| ANSI FLANGE GASKETS | | |
|---|---|---|
| PART NO | DESCRIPTION | QTY |
| AF100G | 1" ANSI Flange EPDM Gasket | 1 |
| AF100GV | 1" ANSI Flange FKM (viton type) Gasket | 1 |
| AF150G | 1½" ANSI Flange EPDM Gasket | 1 |
| AF150GV | 1½" ANSI Flange FKM (viton type) Gasket | 1 |
| AF200G | 2" ANSI Flange EPDM Gasket | 1 |
| AF200GV | 2" ANSI Flange FKM (viton type) Gasket | 1 |
| AF300G | 3" ANSI Flange EPDM Gasket | 1 |
| AF300GV | 3" ANSI Flange FKM (viton type) Gasket | 1 |
| AF400G | 4" ANSI Flange EPDM Gasket | 1 |
| AF400GV | 4" ANSI Flange FKM (viton type) Gasket | 1 |

# 316 Stainless Steel Cam Lever Couplings

A

B

C

D

E

F

PL

CAP

## FEATURES

- Tough 316 stainless steel to insure durability.
- Chemical resistant to protect against corrosion.
- Precision-made, investment casting high quality process to assure uniformity & proper fit.
- Versatile to interchange with all types of cam lever couplings.
- Smooth operation makes connections quick & easy.
- Standard with Buna "N" gaskets. FKM (viton type) & EPDM available. PTFE Available upon request.

**WARNING: Couplings should not be disconnected under pressure or with liquid in the line.**

CAM LEVER COUPLINGS

| 316 STAINLESS STEEL CAM LEVER COUPLINGS | | | | | | | |
|---|---|---|---|---|---|---|---|
| ITEM | DESCRIPTION | ¾" | 1" | 1½" | 2" | 3" | 4" |
| A | Male Adapter-Female Thread | 075ASS | 100ASS | 150ASS | 200ASS | 300ASS | 400ASS |
| B | Female Coupler- Male Thread | 075BSS | 100BSS | 150BSS | 200BSS | 300BSS | 400BSS |
| C | Female Coupler-Hose Shank | 075CSS | 100CSS | 150CSS | 200CSS | 300CSS | 400CSS |
| D | Female Coupler-Female Thread | 075DSS | 100DSS | 150DSS | 200DSS | 300DSS | 400DSS |
| E | Male Adapter-Hose Shank | 075ESS | 100ESS | 150ESS | 200ESS | 300ESS | 400ESS |
| F | Male Adapter-Male Thread | 075FSS | 100FSS | 150FSS | 200FSS | 300FSS | 400FSS |
| PL | Plug for Female Coupler | 075PL/SS | 100PL/SS | 150PL/SS | 200PL/SS | 300PL/SS | 400PL/SS |
| CAP | Cap for Male Adapter | 075CAP/SS | 100CAP/SS | 150CAP/SS | 200CAP/SS | 300CAP/SS | 400CAP/SS |

| ¾" SERIES SS CAM LEVER COUPLINGS | | | | |
|---|---|---|---|---|
| PART NO | DESCRIPTION | MAX PSI | GASKET | QTY |
| 075ASS | ¾" Male Adapter-¾" Female Thread | 300 | N/A | 1 |
| 075BSS | ¾" Female Coupler-¾" Male Thread | 300 | Buna | 1 |
| 075CSS | ¾" Female Coupler-¾" Hose Shank | 300 | Buna | 1 |
| 075DSS | ¾" Female Coupler-¾" Female Thread | 300 | Buna | 1 |
| 075ESS | ¾" Male Adapter-¾" Hose Shank | 300 | N/A | 1 |
| 075FSS | ¾" Male Adapter-¾" Male Thread | 300 | N/A | 1 |
| 075CAP/SS | ¾" Cap-Male Adapter | 300 | Buna | 1 |
| 075PL/SS | ¾" Plug-Female Coupler | 300 | N/A | 1 |

| 1" SERIES SS CAM LEVER COUPLINGS | | | | |
|---|---|---|---|---|
| PART NO | DESCRIPTION | MAX PSI | GASKET | QTY |
| 100ASS | 1" Male Adapter-1" Female Thread | 300 | N/A | 1 |
| 100BSS | 1" Female Coupler-1" Male Thread | 300 | Buna | 1 |
| 100CSS | 1" Female Coupler-1" Hose Shank | 300 | Buna | 1 |
| 100DSS | 1" Female Coupler-1" Female Thread | 300 | Buna | 1 |
| 100ESS | 1" Male Adapter-1" Hose Shank | 300 | N/A | 1 |
| 100FSS | 1" Male Adapter-1" Male Thread | 300 | N/A | 1 |
| 100CAP/SS | 1" Cap-Male Adapter | 300 | Buna | 1 |
| 100PL/SS | 1" Plug-Female Coupler | 300 | N/A | 1 |

## 1½" SERIES SS CAM LEVER COUPLINGS

| PART NO | DESCRIPTION | MAX PSI | GASKET | QTY |
|---|---|---|---|---|
| 150ASS | 1½" Male Adapter-1½" Female Thread | 300 | N/A | 1 |
| 150BSS | 1½" Female Coupler-1½" Male Thread | 300 | Buna | 1 |
| 150CSS | 1½" Female Coupler-1½" Hose Shank | 300 | Buna | 1 |
| 150DSS | 1½" Female Coupler-1½" Female Thread | 300 | Buna | 1 |
| 150ESS | 1½" Male Adapter-1½" Hose Shank | 300 | N/A | 1 |
| 150FSS | 1½" Male Adapter-1½" Male Thread | 300 | N/A | 1 |
| 150CAP/SS | 1½" Cap-Male Adapter | 300 | Buna | 1 |
| 150PL/SS | 1½" Plug-Female Coupler | 300 | N/A | 1 |

## 2" SERIES SS CAM LEVER COUPLINGS

| PART NO | DESCRIPTION | MAX PSI | GASKET | QTY |
|---|---|---|---|---|
| 200ASS | 2" Male Adapter-2" Female Thread | 300 | N/A | 1 |
| 200BSS | 2" Female Coupler-2" Male Thread | 300 | Buna | 1 |
| 200CSS | 2" Female Coupler-2" Hose Shank | 300 | Buna | 1 |
| 200DSS | 2" Female Coupler-2" Female Thread | 300 | Buna | 1 |
| 200ESS | 2" Male Adapter-2" Hose Shank | 300 | N/A | 1 |
| 200FSS | 2" Male Adapter-2" Male Thread | 300 | N/A | 1 |
| 200CAP/SS | 2" Cap-Male Adapter | 300 | Buna | 1 |
| 200PL/SS | 2" Plug-Female Coupler | 300 | N/A | 1 |

## 3" SERIES SS CAM LEVER COUPLINGS

| PART NO | DESCRIPTION | MAX PSI | GASKET | QTY |
|---|---|---|---|---|
| 300ASS | 3" Male Adapter-3" Female Thread | 300 | N/A | 1 |
| 300BSS | 3" Female Coupler-3" Male Thread | 300 | Buna | 1 |
| 300CSS | 3" Female Coupler-3" Hose Shank | 300 | Buna | 1 |
| 300DSS | 3" Female Coupler-3" Female Thread | 300 | Buna | 1 |
| 300ESS | 3" Male Adapter-3" Hose Shank | 300 | N/A | 1 |
| 300FSS | 3" Male Adapter-3" Male Thread | 300 | N/A | 1 |
| 300CAP/SS | 3" Cap-Male Adapter | 300 | Buna | 1 |
| 300PL/SS | 3" Plug-Female Coupler | 300 | N/A | 1 |

## 4" SERIES SS CAM LEVER COUPLINGS

| PART NO | DESCRIPTION | MAX PSI | GASKET | QTY |
|---|---|---|---|---|
| 400ASS | 4" Male Adapter-4" Female Thread | 300 | N/A | 1 |
| 400BSS | 4" Female Coupler-4" Male Thread | 300 | Buna | 1 |
| 400CSS | 4" Female Coupler-4" Hose Shank | 300 | Buna | 1 |
| 400DSS | 4" Female Coupler-4" Female Thread | 300 | Buna | 1 |
| 400ESS | 4" Male Adapter-4" Hose Shank | 300 | N/A | 1 |
| 400FSS | 4" Male Adapter-4" Male Thread | 300 | N/A | 1 |
| 400CAP/SS | 4" Cap-Male Adapter | 300 | Buna | 1 |
| 400PL/SS | 4" Plug-Female Coupler | 300 | N/A | 1 |

## REPLACEMENT PARTS SS CAM ARM W/RING

| PART NO | DESCRIPTION | QTY |
|---|---|---|
| 300K6 | 3" & 4" Cam Arm w/Ring | 1 |

## REPLACEMENT PARTS SS COUPLING PINS & RINGS

| PART NO | DESCRIPTION | QTY |
|---|---|---|
| 100RING | ¾" & 1" Ring | 1 |
| 150RING | 1½", 2", 3" & 4" Ring | 1 |

## REPLACEMENT PARTS SS COUPLING GASKETS

| PART NO | DESCRIPTION | QTY |
|---|---|---|
| 75GV | ¾" FKM (viton type) Gasket | 100/bag |
| 100GV | 1" FKM (viton type) Gasket | 100/bag |
| 150GV | 1½" FKM (viton type) Gasket | 100/bag |
| 200GV | 2" FKM (viton type) Gasket | 50/bag |
| 300GV | 3" FKM (viton type) Gasket | 25/bag |
| 400GV | 4" FKM (viton type) Gasket | 25/bag |

## REPLACEMENT PARTS SS COUPLING GASKETS

| PART NO | DESCRIPTION | QTY |
|---|---|---|
| 200GB | 2" Buna Gasket | 50/bag |

# Polypropylene Cam Lever Couplings

## FEATURES

- Stainless steel rings, arms & pins.
- Most complete line of polypropylene couplings available.
- Versatile — interchangeable with all types of cam lever couplers.
- Precision molded — insures a uniform and accurate fit.
- Durable — Polypropylene is glass reinforced for rugged strength and durability.
- Smooth operating — finger rings are designed for easy opening of cam levers.
- Complete series of ½", ¾", 1", 1¼", 1½", 2", 3" and 4" NPT thread.
- BSP threads available 1"- 3" sizes (excluding 1¼").
- Economical and superior in performance.
- Standard with EPDM gaskets. Buna "N", and FKM (viton type) also available.

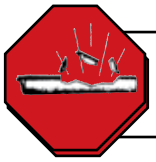

**WARNING: Couplings should not be disconnected under pressure or with liquid in the line.**

A

B

C

D

E

F

PL

CAP

3 ARMS

**303B & 303C & All 4" Couplings have 3 Arms for POSITIVE SEAL!**

**Must order in bag quantities for quick and easy shipping and receiving of your order.**

CAM LEVER COUPLINGS

| CAM LEVER COUPLINGS | | | | | | | | | | | | | | |
|---|---|---|---|---|---|---|---|---|---|---|---|---|---|---|
| ITEM | DESCRIPTION | ¼" * | ⅜" * | ½" * | ¾" | 1" | 1¼" ** | 1½" x 1¼" *** | 1½" | 2" | 2½" | 3" | 3" 3 ARMS | 4" 3 ARMS |
| A | Male Adapter-Female Thread | 75A1/4 | 75A3/8 | 75A1/2 | 75A3/4 | 100A | 125A | 150125A | 150A | 200A | | 300A | | 400A |
| B | Female Coupler- Male Thread | | | 75B1/2 | 75B3/4 | 100B | 125B | 150125B | 150B | 200B | | 300B | 303B | 400B |
| C | Female Coupler-Hose Shank | | | 050C | 075C | 100C | 125C | 150125C | 150C | 200C | | 300C | 303C | 400C |
| D | Female Coupler-Female Thread | | 075D3/8 | 050D | 075D | 100D | 125D | 150125D | 150D | 200D | | 300D | | 400D |
| E | Male Adapter-Hose Shank | | | 050E | 075E | 100E | 125E | 150125E | 150E | 200E | | 300E | | 400E |
| F | Male Adapter-Male Thread | | | 050F | 075F | 100F | 125F | 150125F | 150F | 200F | | 300F | | 400F |
| PL | Plug for Female Coupler | | | 75PL | 75PL | 100125PL | 100125PL | 150PL | 150PL | 200PL | 250PL | 300PL | | 400PL |
| CAP | Cap for Male Adapter | | | 075CAP | 075CAP | 100125CAP | 100125CAP | 150CAP | 150CAP | 200CAP | 250CAP | 300CAP | | 400CAP (2 arms) |
| CAPSH | Cap w/Short Arms | | | | | | | 200CAPSH | | | | | | |

NOTE: *¼", ⅜" and ½" series couplings interchange with ¾" size couplings. Coupling ends are ¾" size.
**1¼" series couplings interchange with 1" size couplings. Coupling ends are 1" size.
***1½" x 1¼" couplings interchange with 1½" size couplings. Coupling ends are 1½" size.

## ½" POLY CAM LEVER COUPLINGS

| PART NO | DESCRIPTION | MAX PSI | GASKET | QTY |
|---|---|---|---|---|
| 75A1/2 | ¾" Male Adapter-½" Female Thread | 225 | N/A | 10/bag |
| 75B1/2 | ¾" Female Coupler-½" Male Thread | 300 | EPDM | 10/bag |
| 050C | ¾" Female Coupler-½" Hose Shank | 300 | EPDM | 10/bag |
| 050D | ¾" Female Coupler-½" FemaleThread | 300 | EPDM | 10/bag |
| 050E | ¾" Male Adapter-½" Hose Shank | 300 | N/A | 10/bag |
| 050F | ¾" Male Adapter-½" Male Thread | 300 | N/A | 10/bag |
| 075CAP | ¾" Cap-Male Adapter | 300 | EPDM | 10/bag |
| 75PL | ¾" Plug-Female Coupler | 300 | N/A | 10/bag |

## ¾" POLY CAM LEVER COUPLINGS

| PART NO | DESCRIPTION | MAX PSI | GASKET | QTY |
|---|---|---|---|---|
| 75A3/4 | ¾" Male Adapter-¾" Female Thread | 225 | N/A | 10/bag |
| 75B3/4 | ¾" Female Coupler-¾" Male Thread | 300 | EPDM | 10/bag |
| 075C | ¾" Female Coupler-¾" Hose Shank | 300 | EPDM | 10/bag |
| 075D | ¾" Female Coupler-¾" FemaleThread | 300 | EPDM | 10/bag |
| 075E | ¾" Male Adapter-¾" Hose Shank | 300 | N/A | 10/bag |
| 075F | ¾" Male Adapter-¾" Male Thread | 300 | N/A | 10/bag |
| 075CAP | ¾" Cap-Male Adapter | 300 | EPDM | 10/bag |
| 75PL | ¾" Plug-Female Coupler | 300 | N/A | 10/bag |

## ¾" x ¼" POLY CAM LEVER COUPLINGS

| PART NO | DESCRIPTION | MAX PSI | GASKET | QTY |
|---|---|---|---|---|
| 75A1/4 | ¾" Male Adapter-¼" Female Thread | 300 | N/A | 10/bag |

## ¾" x ⅜" POLY CAM LEVER COUPLINGS

| PART NO | DESCRIPTION | MAX PSI | GASKET | QTY |
|---|---|---|---|---|
| 75A3/8 | ¾" Male Adapter-⅜" Female Thread | 300 | N/A | 10/bag |
| 075D3/8 | ¾" Female Coupler-⅜" FemaleThread | 300 | N/A | 10/bag |

**NOTE: ½" couplings interchange with ¾" couplings.**
**Banjo 1¼" Couplers & Adapters will interchange with 1" Couplings.**
**Only the Threads and Barbs are 1¼".**

## 1" POLY CAM LEVER COUPLINGS

| PART NO | DESCRIPTION | MAX PSI | GASKET | QTY |
|---|---|---|---|---|
| 100A | 1" Male Adapter-1" Female Thread | 300 | N/A | 10/bag |
| 100B | 1" Female Coupler-1" Male Thread | 300 | EPDM | 10/bag |
| 100C | 1" Female Coupler-1" Hose Shank | 300 | EPDM | 10/bag |
| 100D | 1" Female Coupler-1" FemaleThread | 300 | EPDM | 10/bag |
| 100E | 1" Male Adapter-1" Hose Shank | 300 | N/A | 10/bag |
| 100F | 1" Male Adapter-1" Male Thread | 300 | N/A | 10/bag |
| 100125CAP | 1" Cap-Male Adapter | 300 | EPDM | 10/bag |
| 100125PL | 1" Plug-Female Coupler | 300 | N/A | 10/bag |

## 1" x 1¼" POLY CAM LEVER COUPLINGS

| PART NO | DESCRIPTION | MAX PSI | GASKET | QTY |
|---|---|---|---|---|
| 125A | 1" Male Adapter-1¼" Female Thread | 300 | N/A | 10/bag |
| 125B | 1" Female Coupler-1¼" Male Thread | 300 | EPDM | 10/bag |
| 125C | 1" Female Coupler-1¼" Hose Shank | 300 | EPDM | 10/bag |
| 125D | 1" Female Coupler-1¼" FemaleThread | 300 | EPDM | 10/bag |
| 125E | 1" Male Adapter-1¼" Hose Shank | 300 | N/A | 10/bag |
| 125F | 1" Male Adapter-1¼" Male Thread | 300 | N/A | 10/bag |
| 100125CAP | 1" Cap-Male Adapter | 300 | EPDM | 10/bag |
| 100125PL | 1" Plug-Female Coupler | 300 | N/A | 10/bag |

## 1½" x 1¼" POLY CAM LEVER COUPLINGS

| PART NO | DESCRIPTION | MAX PSI | GASKET | QTY |
|---|---|---|---|---|
| 150125A | 1½" Male Adapter-1¼" Female Thread | 225 | N/A | 10/bag |
| 150125B | 1½" Female Coupler-1¼" Male Thread | 300 | EPDM | 1 |
| 150125C | 1½" Female Coupler-1¼" Hose Shank | 300 | EPDM | 1 |
| 150125D | 1½" Female Coupler-1¼" FemaleThread | 300 | EPDM | 1 |
| 150125E | 1½" Male Adapter-1¼" Hose Shank | 225 | EPDM | 10/bag |
| 150125F | 1½" Male Adapter-1¼" Male Thread | 300 | N/A | 10/bag |
| 150CAP | 1½" Cap-Male Adapter | 300 | EPDM | 1 |
| 150PL | 1½" Plug-Female Coupler | 225 | N/A | 10/bag |

## 1½" POLY CAM LEVER COUPLINGS

| PART NO | DESCRIPTION | MAX PSI | GASKET | QTY |
|---|---|---|---|---|
| 150A | 1½" Male Adapter-1½" Female Thread | 225 | N/A | 10/bag |
| 150B | 1½" Female Coupler-1½" Male Thread | 300 | EPDM | 1 |
| 150C | 1½" Female Coupler-1½" Hose Shank | 300 | EPDM | 1 |
| 150D | 1½" Female Coupler-1½" FemaleThread | 300 | EPDM | 1 |
| 150E | 1½" Male Adapter-1½" Hose Shank | 200 | N/A | 10/bag |
| 150F | 1½" Male Adapter-1½" Male Thread | 300 | N/A | 10/bag |
| 150CAP | 1½" Cap-Male Adapter | 300 | EPDM | 1 |
| 150PL | 1½" Plug-Female Coupler | 225 | N/A | 10/bag |

**NOTE: 1½" x 1¼" couplings interchange with 1½" size couplings.**
**Coupling and Adapter ends are 1½" size. Only the threads and barbs are 1¼".**

## 2" POLY CAM LEVER COUPLINGS

| PART NO | DESCRIPTION | MAX PSI | GASKET | QTY |
|---|---|---|---|---|
| 200A | 2" Male Adapter-2" Female Thread | 225 | N/A | 10/bag |
| 200B | 2" Female Coupler-2" Male Thread | 225 | EPDM | 1 |
| 201B | 2" Female Coupler-2"Extended Male Thread | 200 | EPDM | 1 |
| 200C | 2" Female Coupler-2" Hose Shank | 225 | EPDM | 1 |
| 200D | 2" Female Coupler-2" FemaleThread | 200 | EPDM | 1 |
| 200E | 2" Male Adapter-2" Hose Shank | 200 | N/A | 10/bag |
| 200F | 2" Male Adapter-2" Male Thread | 300 | N/A | 10/bag |
| 200CAP | 2" Cap-Male Adapter | 200 | EPDM | 1 |
| 200CAPSH | 2" Cap-Male Adapter w/Short Arms | 200 | EPDM | 1 |
| 200PL | 2" Plug-Female Coupler | 225 | N/A | 10/bag |

## 2" x 1½" PART C

| PART NO | DESCRIPTION | MAX PSI | GASKET | QTY |
|---|---|---|---|---|
| 200150C | 2" Female Coupler- 1½" Hose Shank | 225 | EPDM | 1 |

## 3" POLY CAM LEVER COUPLINGS

| PART NO | DESCRIPTION | MAX PSI | GASKET | QTY |
|---|---|---|---|---|
| 300A | 3" Male Adapter-3" Female Thread | 100 | N/A | 1 |
| 300B | 3" Female Coupler-3" Male Thread | 150 | EPDM | 1 |
| 303B | 3" Female Coupler-3" Extended Male Thread | 75 | EPDM | 1 |
| 300C | 3" Female Coupler-3" Hose Shank | 200 | EPDM | 1 |
| 303C | 3" Female Coupler w/3 Arms-3" Hose Shank | 200 | EPDM | 1 |
| 300D | 3" Female Coupler-3" Female Thread | 200 | EPDM | 1 |
| 300E | 3" Male Adapter-3" Hose Shank | 150 | N/A | 1 |
| 300F | 3" Male Adapter-3" Male Thread | 100 | N/A | 1 |
| 300CAP | 3" Cap-Male Adapter | 100 | EPDM | 1 |
| 300PL | 3" Plug-Female Coupler | 150 | N/A | 1 |

## 4" w/3 ARMS POLY CAM LEVER COUPLINGS

| PART NO | DESCRIPTION | MAX PSI | GASKET | QTY |
|---|---|---|---|---|
| 400A | 4" Male Adapter-4" Female Thread | 75 | N/A | 1 |
| 400B | 4" Female Coupler-4" Male Thread | 150 | EPDM | 1 |
| 400C | 4" Female Coupler-4" Hose Shank | 150 | EPDM | 1 |
| 400D | 4" Female Coupler-4" Female Thread | 100 | EPDM | 1 |
| 400E | 4" Male Adapter-4" Hose Shank | 50 | N/A | 1 |
| 400F | 4" Male Adapter-4" Male Thread | 75 | N/A | 1 |
| 400CAP | 4" Cap-Male Adapter (w/2 arms) | 100 | EPDM | 1 |
| 400PL | 4" Plug-Female Coupler | 75 | N/A | 1 |

## 3" w/3 ARMS POLY CAM LEVER COUPLINGS

| PART NO | DESCRIPTION | MAX PSI | GASKET | QTY |
|---|---|---|---|---|
| 303B200A | 3" Female Coupler w/3 Arms-2" Male Adapter | 200 | EPDM | 1 |

## SPOOL ADAPTERS

| PART NO | DESCRIPTION | MAX PSI | GASKET | QTY |
|---|---|---|---|---|
| 200FF | 2" Male Adapter-2" Male Adapter | 150 | N/A | 1 |
| 300F200F | 3" Male Adapter-2" Male Adapter | 75 | N/A | 1 |
| 300FF | 3" Male Adapter-3" Male Adapter | 75 | N/A | 1 |

## POLY CAM LEVER COUPLINGS

| PART NO | DESCRIPTION | MAX PSI | GASKET | QTY |
|---|---|---|---|---|
| 201B | 2" Female Coupler-2" Extended Male Thread | 200 | EPDM | 1 |
| 303B | 3" Female Coupler-3" Extended Male Thread | 75 | EPDM | 1 |
| 303C | 3" Female Coupler w/3 Arms-3" Hose Shank | 200 | EPDM | 1 |

## REPLACEMENT PARTS

| PART NO | DESCRIPTION | QTY |
|---|---|---|
| 100RING | ½", ¾", 1" & 1¼" Ring | 1 |
| 150RING | 1½", 2" & 3" Ring | 1 |
| 150(200)K | 1½" & 2" SS Cam Arm w/Ring | 1 |
| 300K | 3" SS Cam Arm w/Ring | 1 |
| V20207 | 11" Lanyard | 1 |

**Must order in bag quantities for quick and easy shipping and receiving of your order.**

Note: PTFE Gaskets available upon request.

## REPLACEMENT PARTS POLY COUPLING GASKETS

| PART NO | DESCRIPTION | QTY |
|---|---|---|
| 75SHM | ¾" Shim | 1 |
| 100SHM | 1" Shim | 1 |
| 150SHM | 1½" Shim | 1 |
| 200SHM | 2" Shim | 1 |
| 300SHM | 3" Shim | 1 |
| 400SHM | 4" Shim | 1 |
| 75G | ½" & ¾" EPDM Gasket | 100/bag |
| 75GV | ½" & ¾" FKM (viton type) Gasket | 100/bag |
| 100G | 1" & 1¼" EPDM Gasket | 100/bag |
| 100GV | 1" & 1¼" FKM (viton type) Gasket | 100/bag |
| 150G | 1½" EPDM Gasket | 100/bag |
| 150GV | 1½" FKM (viton type) Gasket | 100/bag |
| 200G | 2" EPDM Gasket | 50/bag |
| 200GV | 2" FKM (viton type) Gasket | 25/bag |
| 300G | 3" EPDM Gasket | 25/bag |
| 300GV | 3" FKM (viton type) Gasket | 25/bag |
| 400G | 4" EPDM Gasket | 25/bag |
| 400GV | 4" FKM (viton type) Gasket | 25/bag |
| 400GV | 4" FKM (viton type) Gasket | 25/bag |

# 1½" & 2" Polypropylene 90° Couplings

## FEATURES

- Precision molded in polypropylene, reinforced with fiberglass for strength and durability.
- Stainless steel rings, cam levers and pins resist corrosion.
- Banjo 90° angle couplings and adapters will reduce the number of elbows and other pipe fittings used in plumbing applications.

A

B

C

D

F

| 1½" 90° POLY CAM LEVER COUPLINGS | | | | |
|---|---|---|---|---|
| PART NO | DESCRIPTION | MAX PSI | GASKET | QTY |
| 150A90 | 1½" 90° Male Adapter-1½" Female Thread | 225 | EPDM | 1 |
| 150C90 | 1½" 90° Female Coupler-1½" Hose Shank | 225 | EPDM | 1 |
| 150D90 | 1½" 90° Female Coupler-1½" Female Thread | 300 | EPDM | 1 |
| 150F90 | 1½" 90° Male Adapter-1½" Male Thread | 300 | EPDM | 1 |

| 2" 90° POLY CAM LEVER COUPLINGS | | | | |
|---|---|---|---|---|
| PART NO | DESCRIPTION | MAX PSI | GASKET | QTY |
| 200A90 | 2" 90° Male Adapter-2" Female Thread | 225 | EPDM | 1 |
| 200B90 | 2" 90° Female Coupler-2" Male Thread | 225 | EPDM | 1 |
| 200C90 | 2" 90° Female Coupler-2" Hose Shank | 225 | EPDM | 1 |
| 200D90 | 2" 90° Female Coupler-2" Female Thread | 200 | EPDM | 1 |
| 200F90 | 2" 90° Male Adapter-2" Male Thread | 225 | EPDM | 1 |

# 2" Polypropylene 45° Couplings

**WARNING: Couplings should not be disconnected under pressure or with liquid in the line.**

F

| 2" 45° POLY CAM LEVER COUPLINGS | | | | |
|---|---|---|---|---|
| PART NO | DESCRIPTION | MAX PSI | GASKET | QTY |
| 200F45 | 2" 45° Male Adapter-2" Male Thread | 225 | N/A | 1 |

# Polypropylene Switch-a-Roos

## FEATURES

- The Switch-A-Roo is a fast, convenient method of changing spray nozzles on fertilizer application equipment.
- Precision molded in polypropylene (fiberglass reinforced) for high strength and toughness.
- The female coupling is available in either ½" or ¾" pipe thread and normally mounted on the spray boom.
- The male adapter is available in four different thread sizes ¼", ⅜", ½", and ¾" to fit all size spray nozzles.
- Switch-A-Roo's available with self-aligning grooves.

**Must order in bag quantities for quick and easy shipping and receiving of your order.**

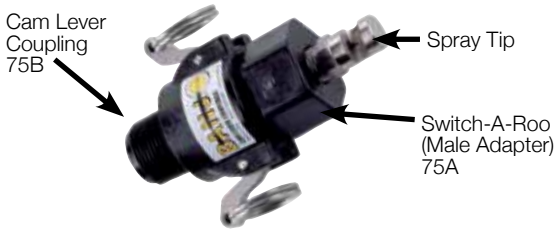


| POLY SWITCH-A-ROOS | | | |
|---|---|---|---|
| PART NO | DESCRIPTION | PSI | QTY |
| 75A1/4/SA | ¾" Male Adapter-¼" w/Self-aligning Groove | 300 | 10/bag |
| 75A3/8/SA | ¾" Male Adapter-⅜" w/Self-aligning Groove | 300 | 10/bag |
| 75A1/2/SA | ¾" Male Adapter-½" w/Self-aligning Groove | 225 | 10/bag |
| 75A3/4/SA | ¾" Male Adapter-¾" w/Self-aligning Groove | 225 | 10/bag |
| 75B1/2 | ¾" Female Coupler-½" Male Thread | 300 | 10/bag |
| 75B3/4 | ¾" Female Coupler-¾" Male Thread | 300 | 10/bag |

¾" Female Coupler

¾" Male Adapter

# Garden Hose Fittings

**FEATURES**

- Quick and simple way to connect and disconnect your garden hose.
- Easily connects hose to spigot, sprinkler, nozzle or other hose end accessories.
- Durable, rustproof polypropylene construction.
- Never have to use pliers to tighten to prevent leaks.
- Yellow fiberglass reinforced polypropylene.
- Standard ¾" opening diameter.

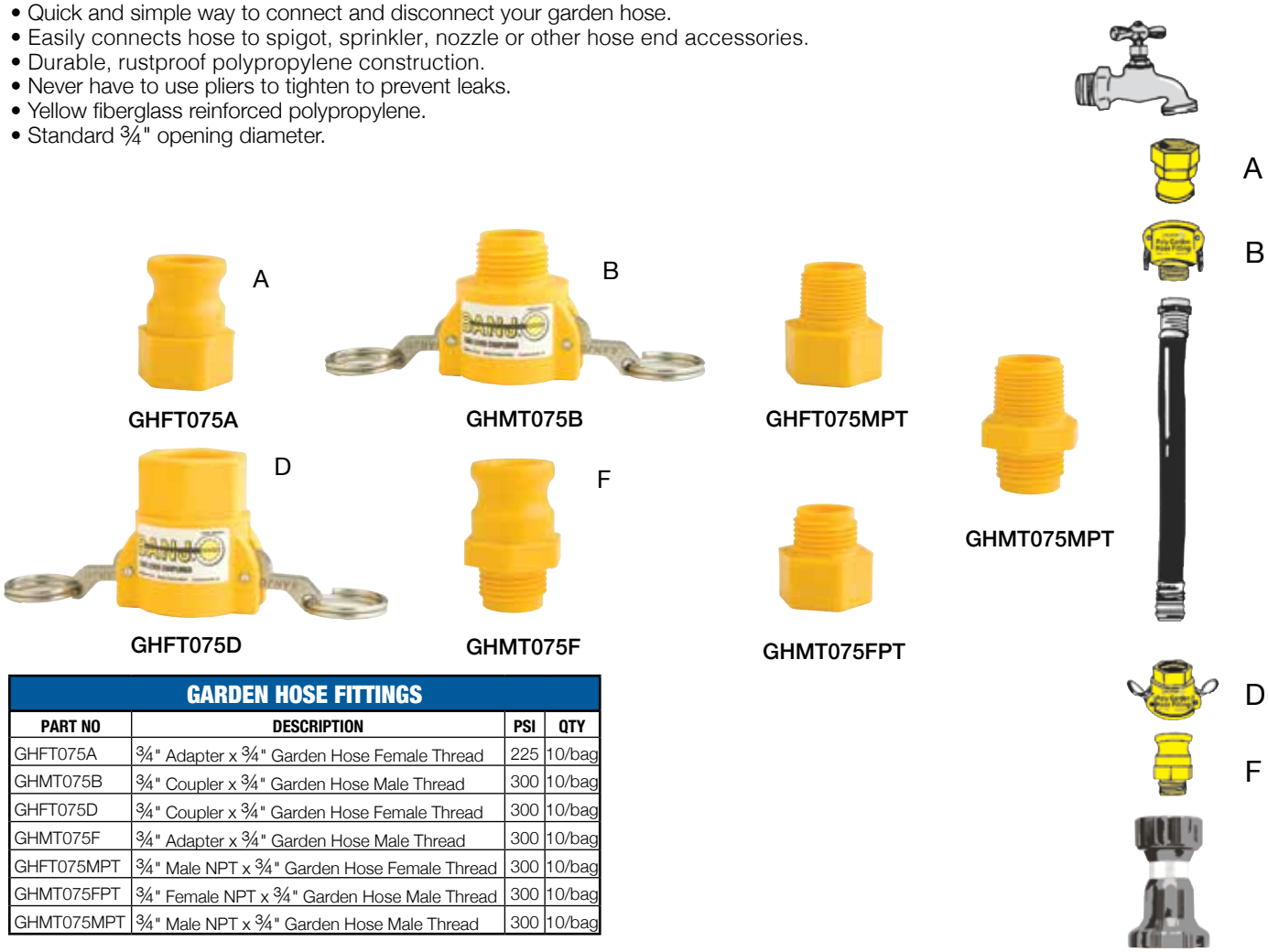


| GARDEN HOSE FITTINGS | | | |
|---|---|---|---|
| PART NO | DESCRIPTION | PSI | QTY |
| GHFT075A | ¾" Adapter x ¾" Garden Hose Female Thread | 225 | 10/bag |
| GHMT075B | ¾" Coupler x ¾" Garden Hose Male Thread | 300 | 10/bag |
| GHFT075D | ¾" Coupler x ¾" Garden Hose Female Thread | 300 | 10/bag |
| GHMT075F | ¾" Adapter x ¾" Garden Hose Male Thread | 300 | 10/bag |
| GHFT075MPT | ¾" Male NPT x ¾" Garden Hose Female Thread | 300 | 10/bag |
| GHMT075FPT | ¾" Female NPT x ¾" Garden Hose Male Thread | 300 | 10/bag |
| GHMT075MPT | ¾" Male NPT x ¾" Garden Hose Male Thread | 300 | 10/bag |



# Garden Hose Spray Nozzle

**FEATURES**

- Heavy-duty machined aluminum construction stands up to hard use.
- Comfort-grip soft rubber provides a comfortable gripping texture.
- Resists dents, mars and scratches and also protects any surface that comes in contact with nozzle.
- Aluminum hose connection provides a tight fit, will not rust.
- Multiple spray pattern adjusts from a powerful jet stream to a gentle fan spray. Ideal for all your spraying needs.
- Stainless steel spray cap for precise spray patterns.

Spray nozzle patterns

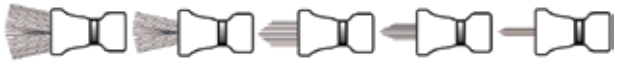

| GARDEN HOSE SPRAY NOZZLE | | | |
|---|---|---|---|
| PART NO | DESCRIPTION | PSI | QTY |
| GHN075 | ¾" Garden Hose Spray Nozzle | N/A | 1 |

# Two Barrel Hardware Clamps



## FEATURES

- Perfect for tight, hard to reach spaces!
- Minimizes parts that protrude by tightening together versus tightening away from.
- Deep socket tools not required.
- 300 Stainless steel construction.

| TWO BARREL HARDWARE CLAMPS | | | | |
|---|---|---|---|---|
| PART NO | DESCRIPTION | MIN/MAX DIAMETER | MAX TORQUE | QTY |
| BC090 | ¾" 300 SS Floating Bridgew/Lockwasher | 0.91"/0.98" | 75 in-lbs | 1 |
| BC114 | 1" 300 SS Floating Bridge w/Lockwasher | 1.14"/1.22" | 75 in-lbs | 1 |

| BANJO MAN | | |
|---|---|---|
| PART NO | DESCRIPTION | QTY |
| BANJOMAN | 18" x 29"- Assembly Required | 1 |

# Banjo Super Clamps

## FEATURES

- Stainless steel construction.
- 304 Stainless steel bolt with 316 SS nut to prevent seizing.
- 360° sealing surface.
- Ideal for high torque applications.
- Strong, positive connections where ordinary hose clamps fail.
- T-bolt design.
- 3 spot welds for extra strength.

*Sold in Bags of 10 ONLY! Priced per clamp!*

Torque Specifications: Working Torque: 50-80 inch pounds.
Maximum Torque: 125 inch pounds

| BANJO SUPER CLAMPS | | | | |
|---|---|---|---|---|
| PART NO | DESCRIPTION | MIN/MAX DIAMETER | MAX TORQUE | QTY |
| TC120 | 1" T-Bolt Hose Clamp | 1.20"/1.34" | 75 in-lbs | 10/bag |
| TC130 | 1¼" T-Bolt Hose Clamp | 1.30"/1.70" | 75 in-lbs | 10/bag |
| TC150 | 1½" T-Bolt Hose Clamp | 1.50"/1.75" | 125 in-lbs | 10/bag |
| TC162 | 1¼" T-Bolt Hose Clamp | 1.62"/1.87" | 125 in-lbs | 10/bag |
| TC181 | 1½" T-Bolt Hose Clamp | 1.81"/2.06" | 125 in-lbs | 10/bag |
| TC193 | 1½" T-Bolt Hose Clamp | 1.93"/2.18" | 125 in-lbs | 10/bag |
| TC206 | 2" T-Bolt Hose Clamp | 2.06"/2.40" | 125 in-lbs | 10/bag |
| TC218 | 2" T-Bolt Hose Clamp | 2.18"/2.50" | 125 in-lbs | 10/bag |
| TC224 | 2" T-Bolt Hose Clamp | 2.24"/2.55" | 125 in-lbs | 10/bag |
| TC231 | 2" T-Bolt Hose Clamp | 2.31"/2.62" | 125 in-lbs | 10/bag |
| TC250 | 2" T-Bolt Hose Clamp | 2.50"/2.81" | 125 in-lbs | 10/bag |
| TC287 | 2" T-Bolt Hose Clamp | 2.87"/3.18" | 125 in-lbs | 10/bag |
| TC312 | 3" T-Bolt Hose Clamp | 3.12"/3.49" | 125 in-lbs | 10/bag |
| TC331 | 3" T-Bolt Hose Clamp | 3.31"/3.62" | 125 in-lbs | 10/bag |
| TC343 | 3" T-Bolt Hose Clamp | 3.50"/3.82" | 125 in-lbs | 10/bag |
| TC425 | 4" T-Bolt Hose Clamp | 4.25"/4.56" | 125 in-lbs | 10/bag |
| TC438 | 4" T-Bolt Hose Clamp | 4.38"/4.76" | 125 in-lbs | 10/bag |
| TC456 | 4" T-Bolt Hose Clamp | 4.56"/4.94" | 125 in-lbs | 10/bag |

## FEATURES

- Glass reinforced polypropylene.
- Heavy duty (Schedule 80).
- Lightweight with excellent strength.
- NPT threads.
- Excellent chemical resistance.

### POLY NIPPLES

| PART NO | DESCRIPTION | PSI | QTY |
|---|---|---|---|
| NIP025-SH | ¼" Short Poly Nipple | 300 | 10/bag |
| NIP038-SH | ⅜" Short Poly Nipple | 300 | 10/bag |
| NIP050-SH | ½" Short Poly Nipple | 300 | 10/bag |
| NIP050-3 | ½" x 3" Poly Nipple | 300 | 10/bag |
| NIP075-SH | ¾" Short Poly Nipple | 300 | 10/bag |
| NIP075-4 | ¾" x 4" Poly Nipple | 300 | 10/bag |
| NIP075-6 | ¾" x 6" Poly Nipple | 300 | 10/bag |
| NIP100-SH | 1" Short Poly Nipple | 300 | 10/bag |
| NIP100-4 | 1" x 4" Poly Nipple | 300 | 10/bag |
| NIP100-6 | 1" x 6" Poly Nipple | 300 | 10/bag |
| NIP125-SH | 1¼" Short Poly Nipple | 300 | 10/bag |
| NIP125-4 | 1¼" x 4" Poly Nipple | 300 | 10/bag |
| NIP125-6 | 1¼" x 6" Poly Nipple | 300 | 10/bag |
| NIP150-SH | 1½" Short Poly Nipple | 300 | 10/bag |
| NIP150-3 | 1½" x 3" Poly Nipple | 300 | 10/bag |
| NIP150-4 | 1½" x 4" Poly Nipple | 300 | 10/bag |
| NIP150-5 | 1½" x 5" Poly Nipple | 300 | 10/bag |
| NIP150-6 | 1½" x 6" Poly Nipple | 300 | 10/bag |
| NIP200-SH | 2" Short Poly Nipple | 300 | 10/bag |
| NIP200-4 | 2" x 4" Poly Nipple | 300 | 10/bag |
| NIP200-6 | 2" x 6" Poly Nipple | 300 | 10/bag |
| NIP300-SH | 3" Short Poly Nipple | 300 | 1 |
| NIP300-4 | 3" x 4" Poly Nipple | 300 | 1 |
| NIP300-6 | 3" x 6" Poly Nipple | 300 | 1 |
| NIP400-SH | 4" Short Poly Nipple | 300 | 1 |

**Must order in bag quantities for quick and easy shipping and receiving of your order.**

### POLY REDUCING NIPPLES

| PART NO | DESCRIPTION | PSI | QTY |
|---|---|---|---|
| RN050-038 | ½" x ⅜" Poly Reducing Nipple | 300 | 10/bag |
| RN075-050 | ¾" x ½" Poly Reducing Nipple | 300 | 10/bag |
| RN100-050 | 1" x ½" Poly Reducing Nipple | 300 | 10/bag |
| RN100-075 | 1" x ¾" Poly Reducing Nipple | 300 | 10/bag |
| RN125-075 | 1¼" x ¾" Poly Reducing Nipple | 300 | 10/bag |
| RN125-100 | 1¼" x 1" Poly Reducing Nipple | 300 | 10/bag |
| RN150-100 | 1½" x 1" Poly Reducing Nipple | 300 | 10/bag |
| RN150-125 | 1½" x1¼" Poly Reducing Nipple | 300 | 10/bag |
| RN200-125 | 2" x 1¼" Poly Reducing Nipple | 300 | 10/bag |
| RN200-150 | 2" x 1½" Poly Reducing Nipple | 300 | 10/bag |
| RN300-200 | 3" x 2" Poly Reducing Nipple | 300 | 1 |

### POLY PIPE COUPLINGS

| PART NO | DESCRIPTION | PSI | QTY |
|---|---|---|---|
| CPLG025 | ¼" Poly Pipe Coupling | 300 | 10/bag |
| CPLG038 | ⅜" Poly Pipe Coupling | 300 | 10/bag |
| CPLG050 | ½" Poly Pipe Coupling | 300 | 10/bag |
| CPLG075 | ¾" Poly Pipe Coupling | 300 | 10/bag |
| CPLG100 | 1" Poly Pipe Coupling | 300 | 10/bag |
| CPLG125 | 1¼" Poly Pipe Coupling | 300 | 10/bag |
| CPLG150 | 1½" Poly Pipe Coupling | 300 | 10/bag |
| CPLG200 | 2" Poly Pipe Coupling | 300 | 10/bag |
| CPLG300 | 3" Poly Pipe Coupling | 225 | 1 |

### POLY REDUCING COUPLINGS

| PART NO | DESCRIPTION | PSI | QTY |
|---|---|---|---|
| RC100-075 | 1" x ¾" Poly Reducing Coupling | 300 | 10/bag |
| RC150-100 | 1½" x 1" Poly Reducing Coupling | 300 | 10/bag |
| RC150-125 | 1½" x1¼" Poly Reducing Coupling | 300 | 10/bag |
| RC200-050 | 2" x ½" Poly Reducing Coupling | 300 | 10/bag |
| RC200-100 | 2" x 1" Poly Reducing Coupling | 300 | 10/bag |
| RC200-125 | 2" x 1¼" Poly Reducing Coupling | 300 | 10/bag |
| RC200-150 | 2" x 1½" Poly Reducing Coupling | 300 | 10/bag |
| RC300-200 | 3" x 2" Poly Reducing Coupling | 300 | 1 |

### POLY REDUCING BUSHING

| PART NO | DESCRIPTION | PSI | QTY |
|---|---|---|---|
| RB038-025 | ⅜" MPT x ¼" FPT Reducing Bushing | 300 | 10/bag |
| RB050-025 | ½" MPT x ¼" FPT Reducing Bushing | 300 | 10/bag |
| RB050-038 | ½" MPT x ⅜" FPT Reducing Bushing | 300 | 10/bag |
| RB075-018 | ¾" MPT x ⅛" FPT Reducing Bushing | 300 | 10/bag |
| RB075-025 | ¾" MPT x ¼" FPT Reducing Bushing | 300 | 10/bag |
| RB075-038 | ¾" MPT x ⅜" FPT Reducing Bushing | 300 | 10/bag |
| RB075-050 | ¾" MPT x ½" FPT Reducing Bushing | 300 | 10/bag |
| RB100-025 | 1" MPT x ¼" FPT Reducing Bushing | 300 | 10/bag |
| RB100-050 | 1" MPT x ½" FPT Reducing Bushing | 300 | 10/bag |
| RB100-075 | 1" MPT x ¾" FPT Reducing Bushing | 300 | 10/bag |
| RB125-075 | 1¼" MPT x ¾" FPT Reducing Bushing | 300 | 10/bag |
| RB125-100 | 1¼" MPT x 1" FPT Reducing Bushing | 300 | 10/bag |
| RB150-075 | 1½" MPT x ¾" FPT Reducing Bushing | 300 | 10/bag |
| RB150-100 | 1½" MPT x 1" FPT Reducing Bushing | 300 | 10/bag |
| RB150-125 | 1½" MPT x1¼" FPT Reducing Bushing | 300 | 10/bag |
| RB200-075 | 2" MPT x ¾" FPT Reducing Bushing | 300 | 10/bag |
| RB200-100 | 2" MPT x 1" FPT Reducing Bushing | 300 | 10/bag |
| RB200-125 | 2" MPT x 1¼" FPT Reducing Bushing | 300 | 10/bag |
| RB200-150 | 2" MPT x 1½" FPT Reducing Bushing | 300 | 10/bag |
| RB300-150 | 3" MPT x 1½" FPT Reducing Bushing | 300 | 1 |
| RB300-200 | 3" MPT x 2" FPT Reducing Bushing | 300 | 1 |
| RB400-300 | 4" MPT x 3" FPT Reducing Bushing | 300 | 1 |

# Polypropylene Pipe Fittings



- Glass reinforced polypropylene.
- Heavy duty (Schedule 80).
- Lightweight with excellent strength.
- NPT threads.
- Excellent chemical resistance.

**Must order in bag quantities for quick and easy shipping and receiving of your order.**

## POLY PIPE CAPS

| PART NO | DESCRIPTION | PSI | QTY |
|---|---|---|---|
| CAP050 | ½" Poly Pipe Cap | 300 | 10/bag |
| CAP075 | ¾" Poly Pipe Cap | 300 | 10/bag |
| CAP100 | 1" Poly Pipe Cap | 300 | 10/bag |
| CAP125 | 1¼" Poly Pipe Cap | 300 | 10/bag |
| CAP150 | 1½" Poly Pipe Cap | 300 | 10/bag |
| CAP200 | 2" Poly Pipe Cap | 300 | 10/bag |
| CAP300 | 3" Poly Pipe Cap | 300 | 1 |

## POLY CROSSES

| PART NO | DESCRIPTION | PSI | QTY |
|---|---|---|---|
| CR025 | ¼" Poly Cross | 300 | 10/bag |
| CR038 | ⅜" Poly Cross | 300 | 10/bag |
| CR050 | ½" Poly Cross | 300 | 5/bag |
| CR075 | ¾" Poly Cross | 300 | 5/bag |
| CR100 | 1" Poly Cross | 300 | 5/bag |
| CR125 | 1¼" Poly Cross | 300 | 1 |
| CR150 | 1½" Poly Cross | 300 | 1 |
| CR200 | 2" Poly Cross | 300 | 1 |

## POLY PIPE PLUGS

| PART NO | DESCRIPTION | PSI | QTY |
|---|---|---|---|
| PLUG025 | ¼" Poly Pipe Plug | 300 | 10/bag |
| PLUG038 | ⅜" Poly Pipe Plug | 300 | 10/bag |
| PLUG050 | ½" Poly Pipe Plug | 300 | 10/bag |
| PLUG075 | ¾" Poly Pipe Plug | 300 | 10/bag |
| PLUG100 | 1" Poly Pipe Plug | 300 | 10/bag |
| PLUG125 | 1¼" Poly Pipe Plug | 300 | 10/bag |
| PLUG150 | 1½" Poly Pipe Plug | 300 | 10/bag |
| PLUG200 | 2" Poly Pipe Plug | 300 | 10/bag |
| PLUG300 | 3" Poly Pipe Plug | 300 | 1 |

## POLY TEES

| PART NO | DESCRIPTION | PSI | QTY |
|---|---|---|---|
| TEE025 | ¼" Poly Tee | 300 | 10/bag |
| TEE038 | ⅜" Poly Tee | 300 | 10/bag |
| TEE050 | ½" Poly Tee | 300 | 10/bag |
| TEE075 | ¾" Poly Tee | 300 | 10/bag |
| TEE100 | 1" Poly Tee | 300 | 10/bag |
| TEE125 | 1¼" Poly Tee | 300 | 10/bag |
| TEE150 | 1½" Poly Tee | 300 | 1 |
| TEE200 | 2" Poly Tee | 300 | 1 |
| TEE300 | 3" Poly Tee | 225 | 1 |

## POLY CROSSES

| PART NO | DESCRIPTION | PSI | QTY |
|---|---|---|---|
| HBC050075 | ½" x ¾" Hose Barb Cross | 300 | 1 |

## POLY GAUGE TEE (GAUGE NOT INCLUDED)

| PART NO | DESCRIPTION | PSI | QTY |
|---|---|---|---|
| TEG075 | ¾" Poly Tee w/ ¼" Female Thread | 300 | 10/bag |
| TEG100 | 1" Poly Tee w/ ¼" Female Thread | 300 | 10/bag |

## 90° POLY ELBOWS

| PART NO | DESCRIPTION | PSI | QTY |
|---|---|---|---|
| EL025-90 | ¼" 90° Poly Elbow | 300 | 10/bag |
| EL038-90 | ⅜" 90° Poly Elbow | 300 | 10/bag |
| EL050-90 | ½" 90° Poly Elbow | 300 | 10/bag |
| EL075-90 | ¾" 90° Poly Elbow | 300 | 10/bag |
| EL100-90 | 1" 90° Poly Elbow | 300 | 10/bag |
| EL125-90 | 1¼" 90° Poly Elbow | 300 | 10/bag |
| EL150-90 | 1½" 90° Poly Elbow | 300 | 10/bag |
| EL200-90 | 2" 90° Poly Elbow | 300 | 1 |
| EL300-90 | 3" 90° Poly Elbow | 300 | 1 |

## 45° POLY ELBOW

| PART NO | DESCRIPTION | PSI | QTY |
|---|---|---|---|
| EL100-45 | 1" 45° Poly Street Elbow | 300 | 10/bag |

## 90° POLY STREET ELBOWS

| PART NO | DESCRIPTION | PSI | QTY |
|---|---|---|---|
| SL025-90 | ¼" 90° Poly Street Elbow | 300 | 10/bag |
| SL038-90 | ⅜" 90° Poly Street Elbow | 300 | 10/bag |
| SL050-90 | ½" 90° Poly Street Elbow | 300 | 10/bag |
| SL075-90 | ¾" 90° Poly Street Elbow | 300 | 10/bag |
| SL100-90 | 1" 90° Poly Street Elbow | 300 | 10/bag |
| SL125-90 | 1¼" 90° Poly Street Elbow | 300 | 10/bag |
| SL150-90 | 1½" 90° Poly Street Elbow | 300 | 10/bag |
| SL200-90 | 2" 90° Poly Street Elbow | 300 | 10/bag |
| SL300-90 | 3" 90° Poly Street Elbow | 300 | 1 |

## 45° POLY STREET ELBOWS

| PART NO | DESCRIPTION | PSI | QTY |
|---|---|---|---|
| SL075-45 | ¾" 45° Poly Street Elbow | 300 | 10/bag |
| SL100-45 | 1" 45° Poly Street Elbow | 300 | 10/bag |
| SL125-45 | 1¼" 45° Poly Street Elbow | 300 | 10/bag |
| SL150-45 | 1½" 45° Poly Street Elbow | 300 | 10/bag |
| SL200-45 | 2" 45° Poly Street Elbow | 225 | 10/bag |
| SL300-45 | 3" 45° Poly Street Elbow | 300 | 1 |

## 90° POLY HOSE BARB ELBOW

| PART NO | DESCRIPTION | PSI | QTY |
|---|---|---|---|
| HBEL100-90 | 1" 90° Poly Hose Barb Elbow | 300 | 10/bag |

## 90° POLY HOSE BARB ELBOW

| PART NO | DESCRIPTION | PSI | QTY |
|---|---|---|---|
| HBB20012590 | 2" x 1¼" 90° Poly Hose Barb Elbow | 300 | 10/bag |

## 90° POLY HOSE BARB ELBOW

| PART NO | DESCRIPTION | PSI | QTY |
|---|---|---|---|
| HBEL150/100-90 | 1½" x 1" 90° Poly Hose Barb Elbow | 300 | 1 |

**Must order in bag quantities for quick and easy shipping and receiving of your order.**

# Polypropylene Pipe Fittings



- Glass reinforced polypropylene.
- Heavy duty (Schedule 80).
- Lightweight with excellent strength.
- NPT threads.
- Excellent chemical resistance.

## POLY STRAIGHT HOSE BARBS

| PART NO | DESCRIPTION | PSI | QTY |
|---|---|---|---|
| HB025 | ¼" Male Thread x ¼" Hose Barb | 300 | 10/bag |
| HB025-038 | ¼" Male Thread x ⅜" Hose Barb | 300 | 10/bag |
| HB025-050 | ¼" Male Thread x ½" Hose Barb | 300 | 10/bag |
| HB038 | ⅜" Male Thread x ⅜" Hose Barb | 300 | 10/bag |
| HB038-025 | ⅜" Male Thread x ¼" Hose Barb | 300 | 10/bag |
| HB038-050 | ⅜" Male Thread x ½" Hose Barb | 300 | 10/bag |
| HB050-025 | ½" Male Thread x ¼" Hose Barb | 300 | 10/bag |
| HB050-038 | ½" Male Thread x ⅜" Hose Barb | 300 | 10/bag |
| HB050 | ½" Male Thread x ½" Hose Barb | 300 | 10/bag |
| HB050-075 | ½" Male Thread x ¾" Hose Barb | 300 | 10/bag |
| HB075-038 | ¾" Male Thread x ⅜" Hose Barb | 300 | 10/bag |
| HB075-050 | ¾" Male Thread x ½" Hose Barb | 300 | 10/bag |
| HB075-058 | ¾" Male Thread x ⅝" Hose Barb | 300 | 10/bag |
| HB075 | ¾" Male Thread x ¾" Hose Barb | 300 | 10/bag |
| HB075-100 | ¾" Male Thread x 1" Hose Barb | 300 | 10/bag |
| HB100-075 | 1" Male Thread x ¾" Hose Barb | 300 | 10/bag |
| HB100 | 1" Male Thread x 1" Hose Barb | 300 | 10/bag |
| HB100-125 | 1" Male Thread x 1¼" Hose Barb | 300 | 10/bag |
| HB125-075 | 1¼" Male Thread x ¾" Hose Barb | 300 | 10/bag |
| HB125-100 | 1¼" Male Thread x 1" Hose Barb | 300 | 10/bag |
| HB125 | 1¼" Male Thread x 1¼" Hose Barb | 300 | 10/bag |
| HB125-150 | 1¼" Male Thread x 1½" Hose Barb | 300 | 10/bag |
| HB150-100 | 1½" Male Thread x 1" Hose Barb | 300 | 10/bag |
| HB150-125 | 1½" Male Thread x 1¼" Hose Barb | 300 | 10/bag |
| HB150 | 1½" Male Thread x 1½" Hose Barb | 300 | 10/bag |
| HB150-200 | 1½" Male Thread x 2" Hose Barb | 300 | 10/bag |
| HB200-150 | 2" Male Thread x 1½" Hose Barb | 300 | 10/bag |
| HB200 | 2" Male Thread x 2" Hose Barb | 300 | 10/bag |
| HB300 | 3" Male Thread x 3" Hose Barb | 225 | 1 |
| HB400 | 4" Male Thread x 4" Hose Barb | 150 | 1 |

## POLY FEMALE HOSE BARBS

| PART NO | DESCRIPTION | PSI | QTY |
|---|---|---|---|
| HBF075 | ¾" Female Thread | 300 | 10/bag |
| HBF075-100 | ¾" Female Thread x 1" Hose Shank | 300 | 10/bag |
| HBF100 | 1" Female Thread x 1" Hose Shank | 300 | 10/bag |

**Must order in bag quantities for quick and easy shipping and receiving of your order.**

## POLY 90° HOSE BARBS

| PART NO | DESCRIPTION | PSI | QTY |
|---|---|---|---|
| HB025-90 | ¼" Male Thread x ¼" 90° Hose Barb | 300 | 10/bag |
| HB025/038-90 | ¼" Male Thread x ⅜" 90° Hose Barb | 300 | 10/bag |
| HB025/050-90 | ¼" Male Thread x ½" 90° Hose Barb | 300 | 10/bag |
| HB038-90 | ⅜" Male Thread x ⅜" 90° Hose Barb | 300 | 10/bag |
| HB050/038-90 | ½" Male Thread x ⅜" 90° Hose Barb | 300 | 10/bag |
| HB050-90 | ½" Male Thread x ½" 90° Hose Barb | 300 | 10/bag |
| HB050/075-90 | ½" Male Thread x ¾" 90° Hose Barb | 300 | 10/bag |
| HB075/050-90 | ¾" Male Thread x ½" 90° Hose Barb | 300 | 10/bag |
| HB075-90 | ¾" Male Thread x ¾" 90° Hose Barb | 300 | 10/bag |
| HB075/100-90 | ¾" Male Thread x 1" 90° Hose Barb | 300 | 10/bag |
| HB100/075-90 | 1" Male Thread x ¾" 90° Hose Barb | 300 | 10/bag |
| HB100-90 | 1" Male Thread x 1" 90° Hose Barb | 300 | 10/bag |
| HB100/125-90 | 1" Male Thread x 1¼" 90° Hose Barb | 300 | 10/bag |
| HB125/100-90 | 1¼" Male Thread x 1" 90° Hose Barb | 300 | 10/bag |
| HB125-90 | 1¼" Male Thread x 1¼" 90° Hose Barb | 300 | 10/bag |
| HB125/150-90 | 1¼" Male Thread x 1½" 90° Hose Barb | 300 | 10/bag |
| HB150/125-90 | 1½" Male Thread x 1¼" 90° Hose Barb | 300 | 10/bag |
| HB150-90 | 1½" Male Thread x 1½" 90° Hose Barb | 300 | 10/bag |
| HB200/150-90 | 2" Male Thread x 1½" 90° Hose Barb | 300 | 10/bag |
| HB200-90 | 2" Male Thread x 2" 90° Hose Barb | 300 | 10/bag |
| HB300-90 | 3" Male Thread x 3" 90° Hose Barb | 225 | 1 |

## 316 SS HOSE BARBS

| PART NO | DESCRIPTION | PSI | QTY |
|---|---|---|---|
| HB025SS | ¼" Male Thread x ¼" Hose Shank | 300 | 1 |
| HB025-038SS | ¼" Male Thread x ⅜" Hose Shank | 300 | 1 |
| HB025-050SS | ¼" Male Thread x ½" Hose Shank | 300 | 1 |
| HB038SS | ⅜" Male Thread x ⅜" Hose Shank | 300 | 1 |
| HB038-050SS | ⅜" Male Thread x ½" Hose Shank | 300 | 1 |
| HB050SS | ½" Male Thread x ½" Hose Shank | 300 | 1 |
| HB050-058SS | ½" Male Thread x ⅝" Hose Shank | 300 | 1 |
| HB050-075SS | ½" Male Thread x ¾" Hose Shank | 300 | 1 |
| HB075-050SS | ¾" Male Thread x ½" Hose Shank | 300 | 1 |
| HB075SS | ¾" Male Thread x ¾" Hose Shank | 300 | 1 |
| HB075-100SS | ¾" Male Thread x 1" Hose Shank | 300 | 1 |
| HB100-075SS | 1" Male Thread x ¾" Hose Shank | 300 | 1 |
| HB100SS | 1" Male Thread x 1" Hose Shank | 300 | 1 |
| HB125SS | 1¼" Male Thread x 1¼" Hose Shank | 300 | 1 |
| HB150SS | 1½" Male Thread x 1½" Hose Shank | 300 | 1 |
| HB200SS | 2" Male Thread x 2" Hose Shank | 300 | 1 |
| HB300SS | 3" Male Thread x 3" Hose Shank | 300 | 1 |

## POLY HOSE BARB TEES

| PART NO | DESCRIPTION | PSI | QTY |
|---|---|---|---|
| HBT025 | ¼" Hose Barb Tee | 300 | 10/bag |
| HBT038 | ⅜" Hose Barb Tee | 300 | 10/bag |
| HBT050-038 | ½" x ½" x ⅜" Hose Barb Tee | 300 | 10/bag |
| HBT050 | ½" Hose Barb Tee | 300 | 10/bag |
| HBT050-075 | ½" x ½" x ¾" Hose Barb Tee | 300 | 10/bag |
| HBT075-050 | ¾" x ¾" x ½" Hose Barb Tee | 300 | 10/bag |
| HBT075 | ¾" Hose Barb Tee | 300 | 10/bag |
| HBT075-100 | ¾" x ¾" x 1" Hose Barb Tee | 300 | 10/bag |
| HBT100-075 | 1" x 1" x ¾" Hose Barb Tee | 300 | 10/bag |
| HBT100 | 1" Hose Barb Tee | 300 | 10/bag |
| HBT200 | 2" Hose Barb Tee | 300 | 1 |
| HBT300 | 3" Hose Barb Tee | 300 | 1 |

## POLY HOSE BARB THREADED TEES

| PART NO | DESCRIPTION | PSI | QTY |
|---|---|---|---|
| HBT100-100 | 1" Hose Barb x 1" Hose Barb x 1" Male Thread Hose Barb Tee | 300 | 10/bag |
| HBT150-100 | 1½" Hose Barb x 1½" Hose Barb x 1" Male Thread Hose Barb Tee | 300 | 1 |
| HBT150-150 | 1½" Hose Barb x 1½" Hose Barb x1½" Male Thread Hose Barb Tee | 300 | 1 |

## SS HOSE BARB THREADED TEE

| PART NO | DESCRIPTION | PSI | QTY |
|---|---|---|---|
| HBT075-050SS | ¾" Hose Barb x ¾" Hose Barb x ½" Male Thread Hose Barb Tee | 300 | 1 |

**Must order in bag quantities for quick and easy shipping and receiving of your order.**

## POLY HOSE MENDERS

| PART NO | DESCRIPTION | PSI | QTY |
|---|---|---|---|
| HM025 | ¼" x ¼" Hose Barb | 300 | 10/bag |
| HM038 | ⅜" x ⅜" Hose Barb | 300 | 10/bag |
| HM050 | ½" x ½" Hose Barb | 300 | 10/bag |
| HM075 | ¾" x ¾" Hose Barb | 300 | 10/bag |
| HM100 | 1" x 1" Hose Barb | 300 | 10/bag |
| HM125 | 1¼" x 1¼" Hose Barb | 300 | 10/bag |
| HM150 | 1½" x 1½" Hose Barb | 300 | 10/bag |
| HM200 | 2" x 2" Hose Barb | 300 | 10/bag |
| HM300 | 3" x 3" Hose Barb | 300 | 1 |

## POLY SWIVEL

| PART NO | DESCRIPTION | MAX PSI | QTY |
|---|---|---|---|
| SW100 | 1" Male x 1" Female Swivel | 300 | 1 |
| SW150 | 1½" Male x 1½" Female Swivel | 300 | 1 |
| SW220 | 2" Full Port Male x 2" Full Port Female Swivel | 150 | 1 |

## 8 STATION POLY MANIFOLD

| PART NO | DESCRIPTION | QTY |
|---|---|---|
| TM075/050 | 8 Station Manifold ¾" Inlet x ½" Outlet, ¼" Gauge Port | 1 |

**Recommended procedure for sealing pipe threads:**

We DO NOT recommend using pipe tape. Pipe tape enlarges the outside diameter of the male thread and may cause the female thread to split. We recommend using a pipe thread sealant. Use on clean tapered threads. Apply a thick even coat on male threads using brush applicator. For pipe diameters smaller than 1¼" apply to male threads only. For 1¼" and larger sizes apply to both male and female threads. Avoid applying excessive amounts. Hand tighten joints and then torque another ½ to ¾ turn until threads seal.

**RectorSeal® No. 21™**: This is a slow drying, soft set multi-purpose sealant designed for use where black is preferred. 8 oz. can with brush in the cap. Conforms to TT-S-1732.

**RectorSeal® Tru-Blu™**: This is a fast drying, flexible set thread sealant designed for high vibration environments. Teflon®* has been added to enhance thread lubrication during assembly and break out. 8 oz. can with brush in the cap. Conforms to TT-S-1732.

NOTE: All recommendations as to use of parts and materials mentioned in this catalog assume that the buyer will ascertain their suitability and that all safety and health standards are met.*DuPont Registered Trademark

**NOTE: WE CAN NO LONGER SHIP THIS PRODUCT OUTSIDE OF THE UNITED STATES.**

## PIPE SEALANT

| PART NO | DESCRIPTION | QTY |
|---|---|---|
| RS21 | RectorSeal® No. 21™ (8 oz-24/case) | 1 |
| RSTB | RectorSeal® Tru-Blu™ (8 oz-24/case) | 1 |

# Polypropylene Mini "T" Line Strainers



## FEATURES

- Heavy-duty glass reinforced polypropylene.
- Clear or black polypropylene bowl.
- Polypropylene ribbed 316 stainless steel screens.
- EPDM gaskets standard.
- Convenient color coded screens for easy mesh size identification. (Refer to chart below)

**½" Mini T-Strainer with Clear Bowl**

| SCREENS | |
|---|---|
| MESH SIZE | RIB COLOR |
| 30 MESH | FLAME RED |
| 50 MESH | GENETIAN BLUE |
| 80 MESH | ZINC YELLOW |
| 100 MESH | TRAFFIC GREEN |

**½" Mini T-Strainer with Black Bowl**

| ½" MINI T-STRAINER W/CLEAR BOWL | | | |
|---|---|---|---|
| PART NO | DESCRIPTION | PSI | QTY |
| LSTM050-30C | ½" x ½" Clear Bowl Strainer w/30 Mesh Screen | 200 | 1 |
| LSTM050-50C | ½" x ½" Clear Bowl Strainer w/50 Mesh Screen | 200 | 1 |
| LSTM050-80C | ½" x ½" Clear Bowl Strainer w/80 Mesh Screen | 200 | 1 |
| LSTM050-100C | ½" x ½" Clear Bowl Strainer w/100 Mesh Screen | 200 | 1 |

| ½" MINI T-STRAINER W/BLACK BOWL | | | |
|---|---|---|---|
| PART NO | DESCRIPTION | PSI | QTY |
| LSTM050-30 | ½" x ½" Black Bowl Strainer w/30 Mesh Screen | 200 | 1 |
| LSTM050-50 | ½" x ½" Black Bowl Strainer w/50 Mesh Screen | 200 | 1 |
| LSTM050-80 | ½" x ½" Black Bowl Strainer w/80 Mesh Screen | 200 | 1 |
| LSTM050-100 | ½" x ½" Black Bowl Strainer w/100 Mesh Screen | 200 | 1 |

| ¾" MINI T-STRAINER W/CLEAR BOWL | | | |
|---|---|---|---|
| PART NO | DESCRIPTION | PSI | QTY |
| LSTM075-30C | ¾" x ¾" Clear Bowl Strainer w/30 Mesh Screen | 200 | 1 |
| LSTM075-50C | ¾" x ¾" Clear Bowl Strainer w/50 Mesh Screen | 200 | 1 |
| LSTM075-80C | ¾" x ¾" Clear Bowl Strainer w/80 Mesh Screen | 200 | 1 |
| LSTM075-100C | ¾" x ¾" Clear Bowl Strainer w/100 Mesh Screen | 200 | 1 |

| ¾" MINI T-STRAINER W/BLACK BOWL | | | |
|---|---|---|---|
| PART NO | DESCRIPTION | PSI | QTY |
| LSTM075-30 | ¾" x ¾" Black Bowl Strainer w/30 Mesh Screen | 200 | 1 |
| LSTM075-50 | ¾" x ¾" Black Bowl Strainer w/50 Mesh Screen | 200 | 1 |
| LSTM075-80 | ¾" x ¾" Black Bowl Strainer w/80 Mesh Screen | 200 | 1 |
| LSTM075-100 | ¾" x ¾" Black Bowl Strainer w/100 Mesh Screen | 200 | 1 |

| STANDARD MESHES & DATA (FOR GENERAL USE ONLY) | | | | |
|---|---|---|---|---|
| MESH | MICRONS | WIRE DIAMETER | OPENING | % OPEN AREA |
| 30 Mesh | 595 | .012 | .021 | 40.8 |
| 50 Mesh | 297 | .009 | .011 | 30.3 |
| 80 Mesh | 177 | .0055 | .007 | 31.4 |
| 100 Mesh | 149 | .0045 | .005 | 30.3 |

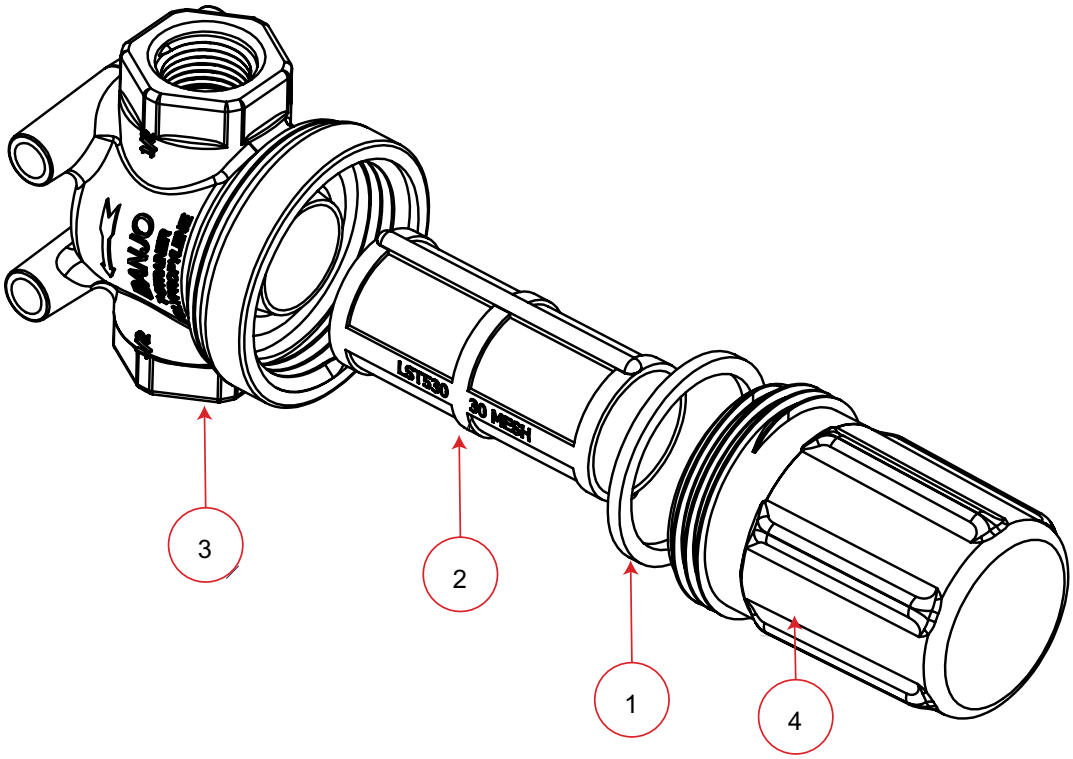


| REPLACEMENT PARTS LSTM050-C & LSTM075-C | | | |
|---|---|---|---|
| ITEM | PART NO | DESCRIPTION | QTY |
| 1 | LSTM050G | EPDM Gasket | 1 |
| 2 | LST530 | 30 Mesh Screen | 1 |
| 2 | LST550 | 50 Mesh Screen | 1 |
| 2 | LST580 | 80 Mesh Screen | 1 |
| 2 | LST5100 | 100 Mesh Screen | 1 |
| 3 | LSTM050H | ½" Strainer Head | 1 |
| 4 | LSTM050BC | Clear Bowl | 1 |

| REPLACEMENT PARTS LSTM050 & LSTM075 | | | |
|---|---|---|---|
| ITEM | PART NO | DESCRIPTION | QTY |
| 1 | LSTM050G | EPDM Gasket | 1 |
| 2 | LST530 | 30 Mesh Screen | 1 |
| 2 | LST550 | 50 Mesh Screen | 1 |
| 2 | LST580 | 80 Mesh Screen | 1 |
| 2 | LST5100 | 100 Mesh Screen | 1 |
| 3 | LSTM050H | ½" Strainer Head | 1 |
| 4 | LSTM050B | Black Bowl | 1 |

# Polypropylene "T" Line Strainers



## FEATURES

- Heavy-duty glass reinforced polypropylene.
- Clean-out plug.
- 316 stainless steel reinforced screens.
- EPDM gaskets standard. FKM (viton type) available.

¾" And 1"

| SCREENS | |
|---|---|
| MESH SIZE | RIB COLOR |
| 16 MESH | BROWN RED |
| 30 MESH | FLAME RED |
| 50 MESH | GENETIAN BLUE |
| 80 MESH | ZINC YELLOW |
| 100 MESH | TRAFFIC GREEN |

1¼" And 1½"

| ¾" T-STRAINER W/SS SCREENS | | | |
|---|---|---|---|
| PART NO | DESCRIPTION | PSI | QTY |
| LST075-16 | ¾" x ¾" T Strainer w/16 Mesh SS Screen | 300 | 1 |
| LST075-30 | ¾" x ¾" T Strainer w/30 Mesh SS Screen | 300 | 1 |
| LST075-50 | ¾" x ¾" T Strainer w/50 Mesh SS Screen | 300 | 1 |
| LST075-80 | ¾" x ¾" T Strainer w/80 Mesh SS Screen | 300 | 1 |
| LST075-100 | ¾" x ¾" T Strainer w/100 Mesh SS Screen | 300 | 1 |

| 1¼" T-STRAINER W/SS SCREENS | | | |
|---|---|---|---|
| PART NO | DESCRIPTION | PSI | QTY |
| LST125-16 | 1¼" x 1¼" T Strainer w/16 Mesh SS Screen | 300 | 1 |
| LST125-30 | 1¼" x 1¼" T Strainer w/30 Mesh SS Screen | 300 | 1 |
| LST125-50 | 1¼" x 1¼" T Strainer w/50 Mesh SS Screen | 300 | 1 |
| LST125-80 | 1¼" x 1¼" T Strainer w/80 Mesh SS Screen | 300 | 1 |
| LST125-100 | 1¼" x 1¼" T Strainer w/100 Mesh SS Screen | 300 | 1 |

| 1" T-STRAINER W/SS SCREENS | | | |
|---|---|---|---|
| PART NO | DESCRIPTION | PSI | QTY |
| LST100-16 | 1" x 1" T Strainer w/16 Mesh SS Screen | 300 | 1 |
| LST100-30 | 1" x 1" T Strainer w/30 Mesh SS Screen | 300 | 1 |
| LST100-50 | 1" x 1" T Strainer w/50 Mesh SS Screen | 300 | 1 |
| LST100-80 | 1" x 1" T Strainer w/80 Mesh SS Screen | 300 | 1 |
| LST100-100 | 1" x 1" T Strainer w/100 Mesh SS Screen | 300 | 1 |

| 1½" T-STRAINER W/SS SCREENS | | | |
|---|---|---|---|
| PART NO | DESCRIPTION | PSI | QTY |
| LST150-16 | 1½" x 1½" T Strainer w/16 Mesh SS Screen | 300 | 1 |
| LST150-30 | 1½" x 1½" T Strainer w/30 Mesh SS Screen | 300 | 1 |
| LST150-50 | 1½" x 1½" T Strainer w/50 Mesh SS Screen | 300 | 1 |
| LST150-80 | 1½" x 1½" T Strainer w/80 Mesh SS Screen | 300 | 1 |
| LST150-100 | 1½" x 1½" T Strainer w/100 Mesh SS Screen | 300 | 1 |

| REPLACEMENT PARTS LST075 & LST100 | | | |
|---|---|---|---|
| ITEM | PART NO | DESCRIPTION | QTY |
| 1 | LST100-B | ¾" & 1" Bowl | 1 |
| 2 | LST100-G | ¾" & 1" EPDM Gasket | 1 |
| 2 | LST100-GV | ¾" & 1" FKM (viton type) Gasket | 1 |
| 3 | 12777 | ½" Plug | 1 |
| 4 | UV15163V | FKM (viton type) O-Ring for Clean Out Plug | 1 |
| 5 | LST116 | 16 Mesh Screen | 1 |
| 5 | LST130 | 30 Mesh Screen | 1 |
| 5 | LST150 | 50 Mesh Screen | 1 |
| 5 | LST180 | 80 Mesh Screen | 1 |
| 5 | LST1100 | 100 Mesh Screen | 1 |
| 6 | LST075-H | ¾" Strainer Head | 1 |
| 6 | LST100-H | 1" Strainer Head | 1 |
| N/S | LST075-HB | ¾" Strainer Head, Bowl & Gasket | 1 |
| N/S | LST100-HB | 1" Strainer Head, Bowl & Gasket | 1 |

**NOTE: Items marked with asterisk* include parts 1, 3 and 4.**

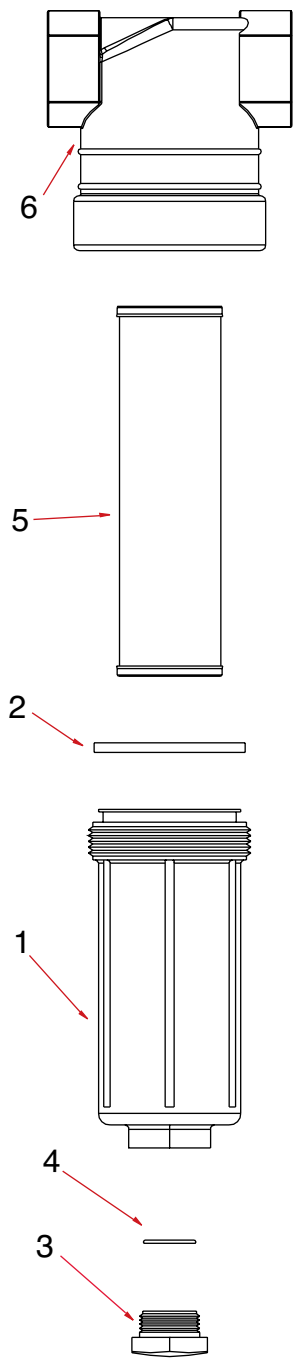


| REPLACEMENT PARTS LST125 & LST150 | | | |
|---|---|---|---|
| ITEM | PART NO | DESCRIPTION | QTY |
| 1 | LST150-B | 1¼" & 1½" Bowl | 1 |
| 2 | LST150-G | 1¼" & 1½" EPDM Gasket | 1 |
| 2 | LST150-GV | 1¼" & 1½" FKM (viton type) Gasket | 1 |
| 3 | LSQ200-PL | 1" Clean Out Plug | 1 |
| 4 | LSQ200-RV | FKM (viton type) O-Ring for Clean Out Plug | 1 |
| 5 | LST1516 | 16 Mesh Screen | 1 |
| 5 | LST1530 | 30 Mesh Screen | 1 |
| 5 | LST1550 | 50 Mesh Screen | 1 |
| 5 | LST1580 | 80 Mesh Screen | 1 |
| 5 | LST15100 | 100 Mesh Screen | 1 |
| 6 | LST125-H | 1¼" Strainer Head | 1 |
| 6 | LST150-H | 1½" Strainer Head | 1 |
| N/S | LST125-HB | 1¼" Strainer Head, Bowl & Gasket | 1 |
| N/S | LST150-HB | 1½" Strainer Head, Bowl & Gasket | 1 |

**NOTE: Items marked with asterisk* include parts 1, 3 and 4.**

| STANDARD MESHES & DATA (FOR GENERAL USE ONLY) | | | | |
|---|---|---|---|---|
| MESH | MICRONS | WIRE DIAMETER | OPENING | % OPEN AREA |
| 16 Mesh | 1190 | .018 | .044 | 50.7 |
| 30 Mesh | 595 | .012 | .021 | 40.8 |
| 50 Mesh | 297 | .009 | .011 | 30.3 |
| 80 Mesh | 177 | .0055 | .007 | 31.4 |
| 100 Mesh | 149 | .0045 | .005 | 30.3 |

# 2" "T" Line Strainer - Poly/Stainless Combo





### FEATURES

- 316 stainless steel head.
- Glass reinforced polypropylene bowl.
- Clean-out plug.
- 316 stainless steel reinforced screens.
- FKM (viton type) gaskets.

| 2" POLY/SS T-STRAINER W/ SCREENS | | | |
|---|---|---|---|
| PART NO | DESCRIPTION | PSI | QTY |
| LST200-04SS | 2" x 2" T Strainer (SS Head & Poly Body) w/4 Mesh Screen | 300 | 1 |
| LST200-06SS | 2" x 2" T Strainer (SS Head & Poly Body) w/6 Mesh Screen | 300 | 1 |
| LST200-10SS | 2" x 2" T Strainer (SS Head & Poly Body) w/10 Mesh Screen | 300 | 1 |
| LST200-16SS | 2" x 2" T Strainer (SS Head & Poly Body) w/16 Mesh Screen | 300 | 1 |
| LST200-30SS | 2" x 2" T Strainer (SS Head & Poly Body) w/30 Mesh Screen | 300 | 1 |
| LST200-50SS | 2" x 2" T Strainer (SS Head & Poly Body) w/50 Mesh Screen | 300 | 1 |
| LST200-80SS | 2" x 2" T Strainer (SS Head & Poly Body) w/80 Mesh Screen | 300 | 1 |
| LST200-100SS | 2" x 2" T Strainer (SS Head & Poly Body) w/100 Mesh Screen | 300 | 1 |

# LSQ Polypropylene Line Strainers

### FEATURES

- Precision molded in glass reinforced polypropylene.
- Cam lever configuration for easy access for cleaning and servicing.
- ¾" plug in cam lever cap for attaching ball valve for draining or back flushing.
- Poly ribbed 316 stainless steel screen.
- EPDM lathe cut gasket.
- FKM (viton type) gaskets available.

| SCREENS | |
|---|---|
| MESH SIZE | RIB COLOR |
| 6 MESH | WHITE |
| 12 MESH | BLACK |
| 20 MESH | BEIGE |
| 30 MESH | FLAME RED |
| 50 MESH | GENETIAN BLUE |
| 80 MESH | ZINC YELLOW |
| 120 MESH | BLACK |

For *faster* shipping, order in box quantities.

| 1½" LSQ POLY STRAINERS | | | |
|---|---|---|---|
| PART NO | DESCRIPTION | PSI | QTY |
| LSQ150-06 | 1½" x 1½" LSQ Strainer w/6 Mesh Screen | 100 | 6/Box |
| LSQ150-12 | 1½" x 1½" LSQ Strainer w/12 Mesh Screen | 100 | 6/Box |
| LSQ150-20 | 1½" x 1½" LSQ Strainer w/20 Mesh Screen | 100 | 6/Box |
| LSQ150-30 | 1½" x 1½" LSQ Strainer w/30 Mesh Screen | 100 | 6/Box |
| LSQ150-50 | 1½" x 1½" LSQ Strainer w/50 Mesh Screen | 100 | 6/Box |
| LSQ150-80 | 1½" x 1½" LSQ Strainer w/80 Mesh Screen | 100 | 6/Box |
| LSQ150-120 | 1½" x 1½" LSQ Strainer w/120 Mesh Screen | 100 | 6/Box |

| 2" LSQ POLY STRAINERS | | | |
|---|---|---|---|
| PART NO | DESCRIPTION | PSI | QTY |
| LSQ200-06 | 2" x 2" LSQ Strainer w/6 Mesh Screen | 100 | 6/Box |
| LSQ200-12 | 2" x 2" LSQ Strainer w/12 Mesh Screen | 100 | 6/Box |
| LSQ200-20 | 2" x 2" LSQ Strainer w/20 Mesh Screen | 100 | 6/Box |
| LSQ200-30 | 2" x 2" LSQ Strainer w/30 Mesh Screen | 100 | 6/Box |
| LSQ200-50 | 2" x 2" LSQ Strainer w/50 Mesh Screen | 100 | 6/Box |
| LSQ200-80 | 2" x 2" LSQ Strainer w/80 Mesh Screen | 100 | 6/Box |
| LSQ200-120 | 2" x 2" LSQ Strainer w/120 Mesh Screen | 100 | 6/Box |

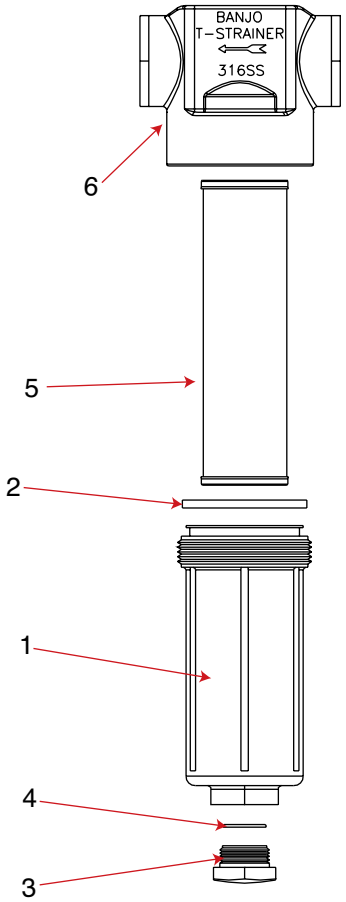


| REPLACEMENT PARTS LST200 | | | |
|---|---|---|---|
| ITEM | PART NO | DESCRIPTION | QTY |
| 1 | LST200-B | 2" Poly Bowl | 1 |
| 2 | LST200-GV | 2" FKM (viton type) Gasket | 1 |
| 3 | LSQ200-PL | 1" Clean Out Plug | 1 |
| 4 | LSQ200-RV | FKM (viton type) O-Ring for Clean Out Plug | 1 |
| 5 | LST204SS | 4 Mesh SS Screen | 1 |
| 5 | LST206SS | 6 Mesh SS Screen | 1 |
| 5 | LST208SS | 8 Mesh SS Screen | 1 |
| 5 | LST210SS | 10 Mesh SS Screen | 1 |
| 5 | LST216SS | 16 Mesh SS Screen | 1 |
| 5 | LST230SS | 30 Mesh SS Screen | 1 |
| 5 | LST250SS | 50 Mesh SS Screen | 1 |
| 5 | LST280SS | 80 Mesh SS Screen | 1 |
| 5 | LST2100SS | 100 Mesh SS Screen | 1 |
| 6 | LST200-HSS | 2" SS Head | 1 |
| N/S | LST200-HBSS | 2" SS Head, Poly Bowl & Gasket | 1 |

**NOTE: Items marked with asterisk* include parts 1, 3 and 4.**

| STANDARD MESHES & DATA (FOR GENERAL USE ONLY) | | | | |
|---|---|---|---|---|
| MESH | MICRONS | WIRE DIAMETER | OPENING | % OPEN AREA |
| 6 Mesh | 3360 | .035 | .132 | 62.7 |
| 8 Mesh | 2380 | .028 | .097 | 60.2 |
| 10 Mesh | 2000 | .025 | .075 | 56.3 |
| 12 Mesh | 1680 | .023 | .060 | 51.8 |
| 16 Mesh | 1190 | .018 | .044 | 50.7 |
| 20 Mesh | 841 | .016 | .034 | 46.2 |
| 30 Mesh | 595 | .012 | .021 | 40.8 |
| 50 Mesh | 297 | .009 | .011 | 30.3 |
| 80 Mesh | 177 | .0055 | .007 | 31.4 |
| 100 Mesh | 149 | .0045 | .005 | 30.3 |
| 120 Mesh | 125 | .0037 | .0046 | 30.5 |

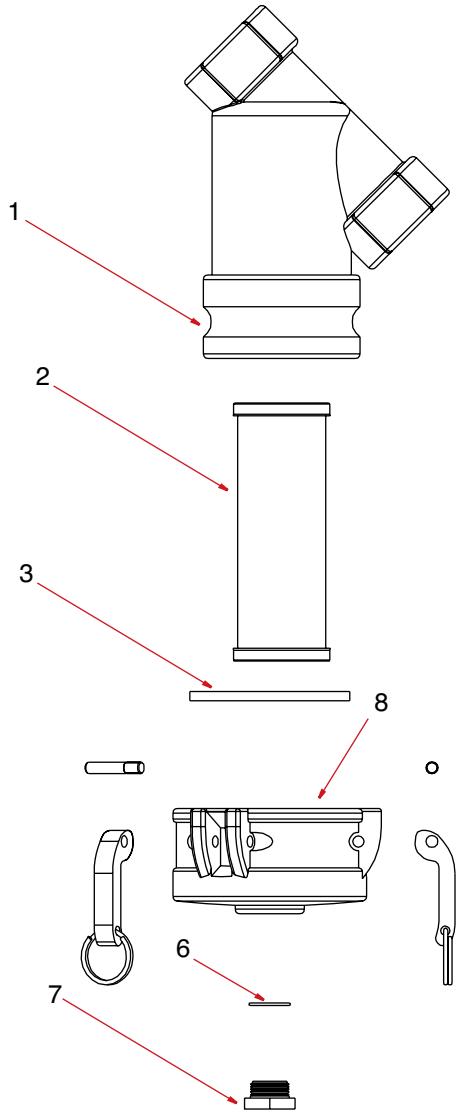


| REPLACEMENT PARTS LSQ150 & LSQ200 | | | |
|---|---|---|---|
| ITEM | PART NO | DESCRIPTION | QTY |
| 1 | LSQ150-B | 1½" LSQ Body | 1 |
| 1 | LSQ200-B | 2" LSQ Body | 1 |
| 2 | LS206 | 6 Mesh Screen | 1 |
| 2 | LS212 | 12 Mesh Screen | 1 |
| 2 | LS220 | 20 Mesh Screen | 1 |
| 2 | LS230 | 30 Mesh Screen | 1 |
| 2 | LS250 | 50 Mesh Screen | 1 |
| 2 | LS280 | 80 Mesh Screen | 1 |
| 2 | LS2120 | 120 Mesh Screen | 1 |
| 3 | LSQ200-G | 2" EPDM Gasket | 1 |
| 3 | LSQ200-GV | 2" FKM (viton type) Gasket | 1 |
| 6 | 13778V | O-Ring | 1 |
| 7 | PLUG075S | ¾" Clean Out Plug | 1 |
| 8 | LSQ200-C | 2" Cap | 1 |

**NOTE: Items marked with asterisk* include parts 6 and 7.**

# ½"-1¼" Polypropylene "Y" Strainers



## FEATURES

- Precision molded construction.
- Corrosion resistant.
- Lightweight.
- Fiberglass reinforced.
- Easy grip end cap.
- Poly ribbed 304 stainless steel screen.
- EPDM gaskets FKM (viton type) available.
- Heavy duty end cap threads.
- Clean-out plug.
- Female NPT x Female NPT.

| ½" Y-STRAINER W/POLY RIBBED SS SCREENS | | | |
|---|---|---|---|
| PART NO | DESCRIPTION | PSI | QTY |
| LS050-20 | ½" x ½" Y Strainer w/20 Mesh SS Screen | 225 | 1 |
| LS050-40 | ½" x ½" Y Strainer w/40 Mesh SS Screen | 225 | 1 |
| LS050-60 | ½" x ½" Y Strainer w/60 Mesh SS Screen | 225 | 1 |
| LS050-80 | ½" x ½" Y Strainer w/80 Mesh SS Screen | 225 | 1 |

| 1" Y-STRAINER W/ POLY RIBBED SS SCREENS | | | |
|---|---|---|---|
| PART NO | DESCRIPTION | PSI | QTY |
| LS100-20 | 1" x 1" Y Strainer w/20 Mesh SS Screen | 200 | 1 |
| LS100-40 | 1" x 1" Y Strainer w/40 Mesh SS Screen | 200 | 1 |
| LS100-80 | 1" x 1" Y Strainer w/80 Mesh SS Screen | 200 | 1 |

| ¾" Y-STRAINER W/ POLY RIBBED SS SCREENS | | | |
|---|---|---|---|
| PART NO | DESCRIPTION | PSI | QTY |
| LS075-20 | ¾" x ¾" Y Strainer w/20 Mesh SS Screen | 225 | 1 |
| LS075-40 | ¾" x ¾" Y Strainer w/40 Mesh SS Screen | 225 | 1 |
| LS075-60 | ¾" x ¾" Y Strainer w/60 Mesh SS Screen | 225 | 1 |
| LS075-80 | ¾" x ¾" Y Strainer w/80 Mesh SS Screen | 225 | 1 |

| 1¼" Y-STRAINER W/ POLY RIBBED SS SCREENS | | | |
|---|---|---|---|
| PART NO | DESCRIPTION | PSI | QTY |
| LS125-20 | 1¼" x 1¼" Y Strainer w/20 Mesh SS Screen | 200 | 1 |
| LS125-40 | 1¼" x 1¼" Y Strainer w/40 Mesh SS Screen | 200 | 1 |
| LS125-80 | 1¼" x 1¼" Y Strainer w/80 Mesh SS Screen | 200 | 1 |

| REPLACEMENT PARTS ½"-¾" Y STRAINERS | | | |
|---|---|---|---|
| ITEM | PART NO | DESCRIPTION | QTY |
| 1 | LS075-C1 | ½"-¾" End Cap | 1 |
| 2 | LS075-G | ½"-¾" O-Ring | 1 |
| 2 | LS075-GV | ½"-¾" FKM (viton type) Gasket | 1 |
| 3 | 12723 | ¼" Drain Plug (Fits ½"-¾") | 1 |
| 4 | 12724 | ½"-¾" EPDM O-Ring for Drain Plug | 1 |
| 5 | LS720 | ½"-¾" 20 Mesh Screen | 1 |
| 5 | LS740 | ½"-¾" 40 Mesh Screen | 1 |
| 5 | LS760 | ½"-¾" 60 Mesh Screen | 1 |
| 5 | LS780 | ½"-¾" 80 Mesh Screen | 1 |
| 6 | LS050-B | ½" Y Body | 1 |
| 6 | LS075-B | ¾" Y Body | 1 |
| N/S | LS050B/C1 | ½" Y Body, Cap & Gasket | 1 |
| N/S | LS075B/C1 | ¾" Y Body, Cap & Gasket | 1 |

| REPLACEMENT PARTS 1"-1¼" Y STRAINERS | | | |
|---|---|---|---|
| ITEM | PART NO | DESCRIPTION | QTY |
| 1 | LS100-C1 | 1"-1¼" End Cap | 1 |
| 2 | LS100-G | 1"-1¼" O-Ring | 1 |
| 2 | LS100-GV | 1"-1¼" FKM (viton type) Gasket | 1 |
| 3 | 12777 | ½" Plug (Fits 1"-1¼") | 1 |
| 5 | LS120 | 1"-1¼" 20 Mesh Screen | 1 |
| 5 | LS140 | 1"-1¼" 40 Mesh Screen | 1 |
| 5 | LS180 | 1"-1¼" 80 Mesh Screen | 1 |
| 6 | LS100-B | 1" Y Body | 1 |
| 6 | LS125-B | 1¼" Y Body | 1 |
| N/S | LS100B/C1 | 1" Y Body, Cap & Gasket | 1 |
| N/S | LS125B/C1 | 1¼" Y Body, Cap & Gasket | 1 |

**NOTE: Items marked with asterisk* come with parts 1, 3, and 4.**

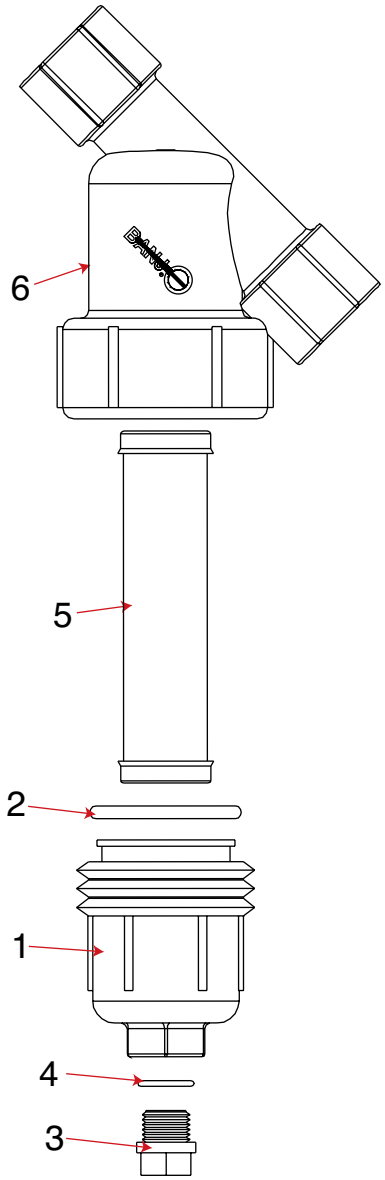


| SCREENS | |
|---|---|
| MESH SIZE | RIB COLOR |
| 6 MESH | WHITE |
| 12 MESH | BLACK |
| 20 MESH | BEIGE |
| 30 MESH | FLAME RED |
| 40 MESH | BROWN |
| 50 MESH | GENETIAN BLUE |
| 60 MESH | GENETIAN BLUE |
| 80 MESH | ZINC YELLOW |
| 100 MESH | TRAFFIC GREEN |
| 120 MESH | BLACK |

| STANDARD MESHES & DATA (FOR GENERAL USE ONLY) | | | | |
|---|---|---|---|---|
| MESH | MICRONS | WIRE DIAMETER | OPENING | % OPEN AREA |
| 6 Mesh | 3360 | .035 | .132 | 62.7 |
| 8 Mesh | 2380 | .028 | .097 | 60.2 |
| 12 Mesh | 1680 | .023 | .060 | 51.8 |
| 16 Mesh | 1190 | .018 | .044 | 50.7 |
| 20 Mesh | 841 | .016 | .034 | 46.2 |
| 30 Mesh | 595 | .012 | .021 | 40.8 |
| 40 Mesh | 400 | .010 | .015 | 36.0 |
| 50 Mesh | 297 | .009 | .011 | 30.3 |
| 60 Mesh | 250 | .0075 | .009 | 30.5 |
| 80 Mesh | 177 | .0055 | .007 | 31.4 |
| 100 Mesh | 149 | .0045 | .005 | 30.3 |
| 120 Mesh | 125 | .0037 | .0046 | 30.5 |

# 1½"-2" Polypropylene "Y" Strainers



## FEATURES

- Precision molded construction.
- Corrosion resistant.
- Lightweight.
- Fiberglass reinforced.
- Easy grip end cap.
- Poly ribbed 316 stainless steel screen.
- EPDM gaskets FKM (viton type) available.
- Heavy duty end cap threads.
- Clean-out plug.
- Female NPT x Female NPT.

| 1½" Y-STRAINER W/POLY RIBBED SS SCREENS | | | |
|---|---|---|---|
| PART NO | DESCRIPTION | PSI | QTY |
| LS150-06 | 1½" x 1½" Y Strainer w/6 Mesh SS Screen | 150 | 1 |
| LS150-12 | 1½" x 1½" Y Strainer w/12 Mesh SS Screen | 150 | 1 |
| LS150-20 | 1½" x 1½" Y Strainer w/20 Mesh SS Screen | 150 | 1 |
| LS150-30 | 1½" x 1½" Y Strainer w/30 Mesh SS Screen | 150 | 1 |
| LS150-50 | 1½" x 1½" Y Strainer w/50 Mesh SS Screen | 150 | 1 |
| LS150-80 | 1½" x 1½" Y Strainer w/80 Mesh SS Screen | 150 | 1 |
| LS150-120 | 1½" x 1½" Y Strainer w/120 Mesh SS Screen | 150 | 1 |

| 2" Y-STRAINER W/POLY RIBBED SS SCREENS | | | |
|---|---|---|---|
| PART NO | DESCRIPTION | PSI | QTY |
| LS200-06 | 2" x 2" Y Strainer w/6 Mesh Poly Ribbed SS Screen | 150 | 1 |
| LS200-12 | 2" x 2" Y Strainer w/12 Mesh Poly Ribbed SS Screen | 150 | 1 |
| LS200-20 | 2" x 2" Y Strainer w/20 Mesh Poly Ribbed SS Screen | 150 | 1 |
| LS200-30 | 2" x 2" Y Strainer w/30 Mesh Poly Ribbed SS Screen | 150 | 1 |
| LS200-50 | 2" x 2" Y Strainer w/50 Mesh Poly Ribbed SS Screen | 150 | 1 |
| LS200-80 | 2" x 2" Y Strainer w/80 Mesh Poly Ribbed SS Screen | 150 | 1 |
| LS200-100 | 2" x 2" Y Strainer w/100 Mesh Poly Ribbed SS Screen | 150 | 1 |
| LS200-120 | 2" x 2" Y Strainer w/120 Mesh Poly Ribbed SS Screen | 150 | 1 |



LINE STRAINERS

| REPLACEMENT PARTS 1½"-2" Y STRAINERS | | | |
|---|---|---|---|
| ITEM | PART NO | DESCRIPTION | QTY |
| 1 | LS150-C* | 1½" - 2" End Cap | 1 |
| 2 | LS150-G | 1½"-2" O-Ring | 1 |
| 2 | LS150-GV | 1½"-2" FKM (viton type) Gasket | 1 |
| 3 | LSQ200-PL | 1" Drain Plug (Fits 1½" - 2") | 1 |
| 4 | LSQ200-RV | 1½"-2" FKM (viton type) O-Ring for Drain Plug | 1 |
| 5 | LS206 | 1½"-2" 6 Mesh Screen | 1 |
| 5 | LS212 | 1½"-2" 12 Mesh Screen | 1 |
| 5 | LS220 | 1½"-2" 20 Mesh Screen | 1 |
| 5 | LS230 | 1½"-2" 30 Mesh Screen | 1 |
| 5 | LS250 | 1½"-2" 50 Mesh Screen | 1 |
| 5 | LS280 | 1½"-2" 80 Mesh Screen | 1 |
| 5 | LS2100 | 1½"-2" 100 Mesh Screen | 1 |
| 5 | LS2120 | 1½"-2" 120 Mesh Screen | 1 |
| 5 | LS212P | 1½"-2" 12 Mesh All Poly Screen | 1 |
| 5 | LS220P | 1½"-2" 20 Mesh All Poly Screen | 1 |
| 5 | LS250P | 1½"-2" 50 Mesh All Poly Screen | 1 |
| 6 | LS150-B | 1½" Y Body | 1 |
| 6 | LS200-B | 2" Y Body | 1 |
| N/S | LS150B/C | 1½" Y Body, Cap & Gasket | 1 |
| N/S | LS200B/C | 2" Y Body, Cap & Gasket | 1 |

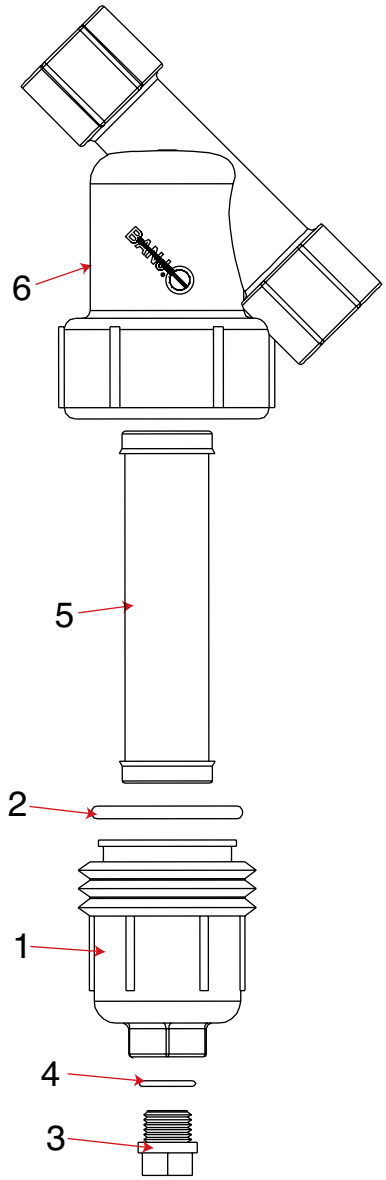


**NOTE: Items marked with asterisk* come with parts 1, 3, and 4.**

| SCREENS | |
|---|---|
| MESH SIZE | RIB COLOR |
| 6 MESH | WHITE |
| 12 MESH | BLACK |
| 20 MESH | BEIGE |
| 30 MESH | FLAME RED |
| 40 MESH | BROWN |
| 50 MESH | GENETIAN BLUE |
| 80 MESH | ZINC YELLOW |
| 100 MESH | TRAFFIC GREEN |
| 120 MESH | BLACK |

| STANDARD MESHES & DATA (FOR GENERAL USE ONLY) | | | | |
|---|---|---|---|---|
| MESH | MICRONS | WIRE DIAMETER | OPENING | % OPEN AREA |
| 6 Mesh | 3360 | .035 | .132 | 62.7 |
| 8 Mesh | 2380 | .028 | .097 | 60.2 |
| 12 Mesh | 1680 | .023 | .060 | 51.8 |
| 16 Mesh | 1190 | .018 | .044 | 50.7 |
| 20 Mesh | 841 | .016 | .034 | 46.2 |
| 30 Mesh | 595 | .012 | .021 | 40.8 |
| 40 Mesh | 400 | .010 | .015 | 36.0 |
| 50 Mesh | 297 | .009 | .011 | 30.3 |
| 60 Mesh | 250 | .0075 | .009 | 30.5 |
| 80 Mesh | 177 | .0055 | .007 | 31.4 |
| 100 Mesh | 149 | .0045 | .005 | 30.3 |
| 120 Mesh | 125 | .0037 | .0046 | 30.5 |

# 3" "Y" Strainers



See page 5 for poly micro valve clean out!

## FEATURES

- Lightweight.
- High volume.
- Constructed of glass reinforced polypropylene.
- ½" drain plug in bottom of cap.
- Reinforced 304 stainless steel screen.
- 3" female NPT threads.
- 75 P.S.I. maximum.*

## FEATURES

- EPDM gaskets standard FKM (viton type) available.
- Corrosion resistant.
- 200 P.S.I. maximum.
- Clean-out plug.
- 316 Stainless steel screens sold separately.

*3" Female NPT threads!*

| 3" Y-STRAINERS | | | |
|---|---|---|---|
| PART NO | DESCRIPTION | PSI | QTY |
| LSM300-04 | 3" x 3" Y Strainer w/4 Mesh Screen | 75 | 2/Box |
| LSM300-08 | 3" x 3" Y Strainer w/8 Mesh Screen | 75 | 2/Box |
| LSM300-12 | 3" x 3" Y Strainer w/12 Mesh Screen | 75 | 2/Box |
| LSM300-20 | 3" x 3" Y Strainer w/20 Mesh Screen | 75 | 2/Box |
| LSM300-50 | 3" x 3" Y Strainer w/50 Mesh Screen | 75 | 2/Box |

*WARNING: 3" Polypropylene "Y" Strainer to be used on suction side or non-pressure side in all applications.

| 3" SS Y-STRAINERS | | |
|---|---|---|
| PART NO | DESCRIPTION | QTY |
| LSS300-BC | 3" SS Body, Cap & Gaskets | 1 |
| LSS300-B | 3" SS Body | 1 |
| LSS300-C | 3" SS Cap | 1 |
| LSS300-S | EPDM Screen Seal | 2 |
| LSS300-SV | FKM (viton type) Screen Seal | 2 |
| LSS300-G | EPDM Cap Gasket | 1 |
| LSS300-GV | FKM (viton type) Cap Gasket | 1 |

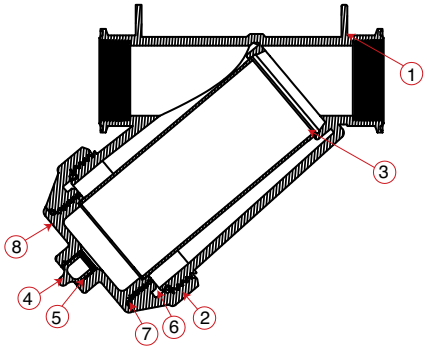


NOTE: Screens Sold Separately. See chart below.

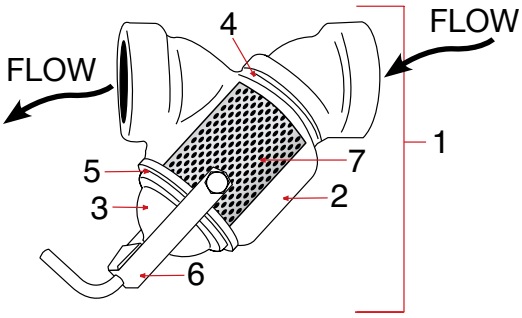


| REPLACEMENT PARTS LSM300 | | | |
|---|---|---|---|
| ITEM | PART NO | DESCRIPTION | QTY |
| 1 | MLS300B1 | 3" Body | 1 |
| 2 | MLS300CAP | 3" Cap | 1 |
| 3 | LS304 | 4 Mesh Screen | 1 |
| 3 | LS308 | 8 Mesh Screen | 1 |
| 3 | LS312 | 12 Mesh Screen | 1 |
| 3 | LS320 | 20 Mesh Screen | 1 |
| 3 | LS350 | 50 Mesh Screen | 1 |
| 4 | 13777 | ¾" Plug | 1 |
| 5 | 13778 | O-Ring | 1 |
| 6 | MLS300G | EPDM Cap Gasket | 1 |
| 6 | MLS300GV | FKM (viton type) Cap Gasket | 1 |
| 7 | MLS300ECG | EPDM End Cap Gasket | 1 |
| 7 | MLS300ECGV | FKM (viton type) Cap Gasket | 1 |
| 8 | LS300EC | End Cap Only (Plug Sold Separately) | 1 |

| REPLACEMENT PARTS LSS300 | | | |
|---|---|---|---|
| ITEM | PART NO | DESCRIPTION | QTY |
| 1 | LSS300-BC | 3" SS Body, Cap & Gaskets | 1 |
| 2 | LSS300-B | 3" SS Body | 1 |
| 3 | LSS300-C | 3" SS Cap | 1 |
| 4 | LSS300-S | EPDM Screen Seal | 2 |
| 4 | LSS300-SV | FKM (viton type) Screen Seal | 2 |
| 5 | LSS300-G | EPDM Cap Gasket | 1 |
| 5 | LSS300-GV | FKM (viton type) Cap Gasket | 1 |
| 6 | LSS300-H | Handle/Clamp Assembly | 1 |
| 7 | LSS306 | 6 Mesh SS Screen | 1 |
| 7 | LSS308 | 8 Mesh SS Screen | 1 |
| 7 | LSS312 | 12 Mesh SS Screen | 1 |
| 7 | LSS320 | 20 Mesh SS Screen | 1 |
| 7 | LSS330 | 30 Mesh SS Screen | 1 |
| 7 | LSS350 | 50 Mesh SS Screen | 1 |

# Self-Priming Centrifugal Pumps

**1½" & 2" Poly Pumps: Pages 98-109**
Includes:
Gas Engine Pumps
Pump Only/Bearing Pedestal
Wet Seal w/gas engines
Manifold
Electric Motor Driven
Hydraulic Motor Driven

**3" Cast Iron 333 Series Pumps: Pages 140-141**
Includes:
Gas Engine Pumps
Pump Only/Bearing Pedestal
Electric Motor Driven

**3" Poly Pumps: Pages 110-115**
Includes:
Gas Engine Pumps
Pump Only/Bearing Pedestal
Wet Seal w/gas engines
Hydraulic Motor Driven
Manifold

**3" CI Manifold Wet Seal M332 Series Pumps: Pages 142-145**
Includes:
Gas Engine Pumps
Pump Only/Bearing Pedestal
Electric Motor Driven
Hydraulic Motor Driven

**1½"-2" Cast Iron Pumps: Pages 116-125**
Includes:
Gas Engine Pumps
Pump Only/Bearing Pedestal
Wet Seal
Electric Motor Driven
Hydraulic Motor Driven

**4" Cast Iron 444 Series Pumps: Pages 146-147**
Includes:
Gas Engine Pumps
Pump Only/Bearing Pedestal Pumps

**2" Cast Iron 222 Series Pumps: Pages 126-133**
Includes:
Gas Engine Pumps
Pump Only
Bearing Pedestal Pumps
Hydraulic Motor Driven
Manifold

**2" & 3" SS Pumps: Pages 148-157**
Includes:
Gas Engine Pumps
Pump Only/Bearing Pedestal.
Electric Motor Driven
Hydraulic Motor Driven

**3" Cast Iron Pumps: Pages 134-139**
Includes:
Gas Engine Pumps
Pump Only/Bearing Pedestal
Wet Seal
Hydraulic Motor Driven

PUMPS

## For Engine Warranty Service Contact:

**Briggs and Stratton® (414) 259-5262 or www.briggsandstratton.com**

**Honda® (800) 426-7701 or www.honda.com**

# 2" Pump Roll Cage Accessory



## FEATURES

- Made of steel tube construction for stability.
- Powder coated finish for durablity.
- Fits all 2" polypropylene pumps.
- Unassembled

| 2" PUMP ROLL CAGE | | |
|---|---|---|
| PART NO | DESCRIPTION | QTY |
| PRC200 | Pump Roll Cage fits all 2" Poly Pumps - Unassembled | 1 |

# 1½" & 2" Polypropylene Pumps w/Gas Engines

## PUMP FEATURES

- Precision molded construction.
- Lightweight.
- Corrosion resistant.
- Superior design.
- Low maintenance.
- EPDM Standard, FKM (viton type) available.

| 1½" & 2" POLY BEARING PEDESTAL | | | |
|---|---|---|---|
| PART NO | DESCRIPTION | HP | QTY |
| 150PB | 1½" Poly Bearing Pedestal w/ ¾" Shaft & 3 Vane Impeller | N/A | 1 |
| 200PB | 2" Poly Bearing Pedestal w/ ¾" Shaft & 3 Vane Impeller | N/A | 1 |
| 200PB-V | 2" Poly Bearing Pedestal w/ ¾" Shaft & 3 Vane Impeller w/ FKM (viton type) & 316 SS Seal | N/A | 1 |
| 205PB | 2" Poly Bearing Pedestal w/ ¾" Shaft & 5 Vane Impeller | N/A | 1 |
| 205PB-V | 2" Poly Bearing Pedestal w/ ¾" Shaft & 5 Vane Impeller w/FKM (viton type) & 316 SS Seal | N/A | 1 |

| 2" POLY PUMPS W/GAS ENGINES | | | |
|---|---|---|---|
| PART NO | DESCRIPTION | HP | QTY |
| 200PH-5 | 2" Poly Pump w/5.5 HP Honda® Engine | 5.5 | 1 |
| 200PH-5E | 2" Poly Pump w/5.5 HP Honda® Engine w/Electric Start | 5.5 | 1 |
| 200PH-5V | 2" Poly Pump w/5.5 HP Honda® Engine w/FKM (viton type) & 316 SS Seal | 5.5 | 1 |
| 200PH6 | 2" Poly Pump w/6.5 HP Honda® Engine | 6.5 | 1 |
| 200P6PRO | 2" Poly Pump w/6.5 HP Briggs & Stratton® Engine Pro Series | 6.5 | 1 |
| 200P6PROE | 2" Poly Pump w/6.5 HP Briggs & Stratton® Engine Pro Series w/Electric Start | 6.5 | 1 |
| 200P6PROV | 2" Poly Pump w/6.5 HP Briggs & Stratton® Engine Pro Series w/FKM (viton type) & 316 SS Seal | 6.5 | 1 |

| 1½" & 2" POLY PUMP ONLY | | | |
|---|---|---|---|
| PART NO | DESCRIPTION | HP | QTY |
| 150PO | 1½"" Poly Pump Only* w/ 3 Vane Impeller | N/A | 1 |
| 200PO | 2" Poly Pump Only* w/ 3 Vane Impeller | N/A | 1 |
| 200PO-V | 2" Poly Pump Only* w/ 3 Vane Impeller w/FKM (viton type) & 316 SS Seal | N/A | 1 |
| 205PO | 2" Poly Pump Only* w/ 5 Vane Impeller | N/A | 1 |
| 205PO-V | 2" Poly Pump Only* w/ 5 Vane Impeller w/FKM (viton type) & 316 SS Seal | N/A | 1 |

*Requires ¾" shaft on motor.

**CAUTION-WARNING:** Please do not run pump dry, restrict or reduce port sizes, or dead head pump. This could cause component failure to pump.

**DO NOT USE WITH FLAMMABLE LIQUIDS.**

**NOTE:** Engine warranty service available at authorized Briggs & Stratton and Honda dealers.

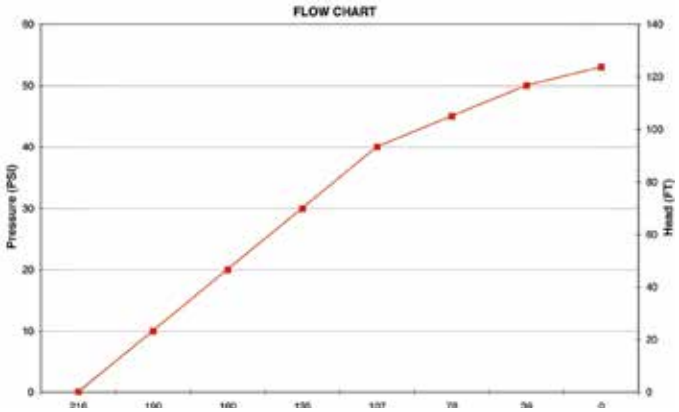

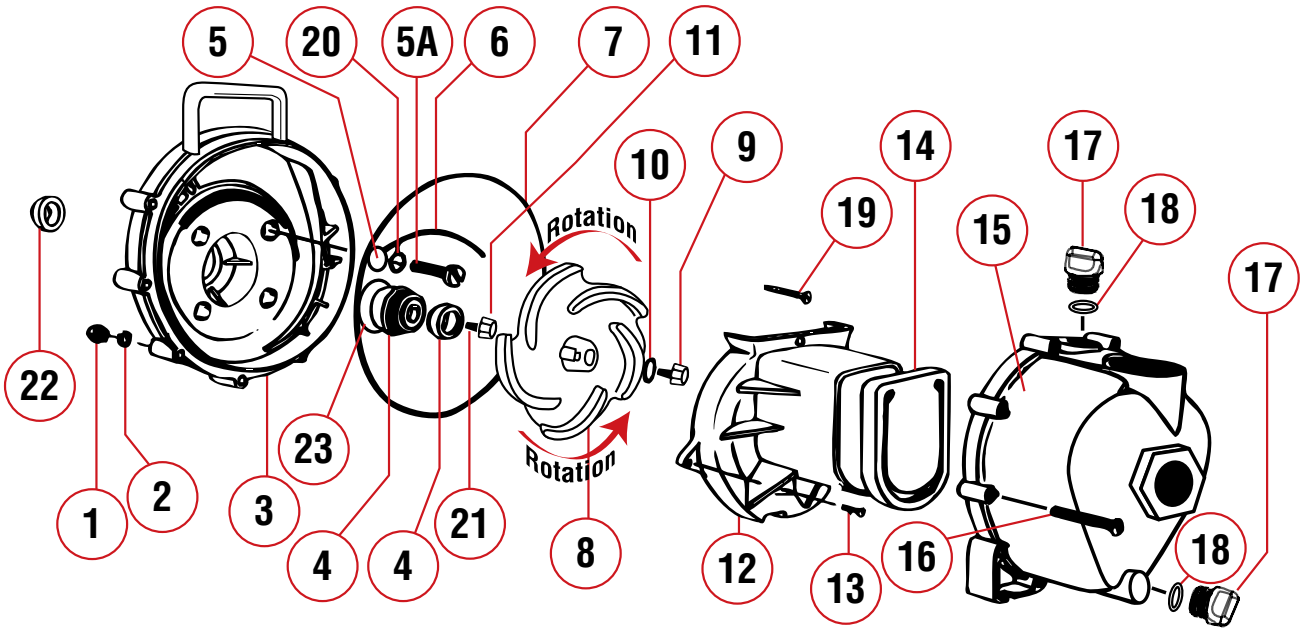


| REPLACEMENT PARTS 2" POLY PUMPS | | | |
|---|---|---|---|
| ITEM | PART NO | DESCRIPTION | QTY |
| 1 | V07019 | SS Body Nuts | 10 |
| 2 | V07018 | SS Lock Washers | 10 |
| 3 | 12703A | Poly Pump Rear Bracket | 1 |
| 4 | 12713 | Seal Assembly | 1 |
| 5 | 12717 | O-Ring for Screw Head | 4 |
| 5A | 12715A | SS Bracket Screws | 4 |
| 6 | 12754 | O-Ring Segment | 1 |
| 7 | 12719A | Body O-Ring | 1 |
| 8 | 12772 | 5 Vane Impeller | 1 |
| 9 | 12765A | SS Impeller Bolt | 1 |
| 10 | 12774VA | Impeller Bolt Gasket | 1 |
| 11 | 12775A | Impeller Hex Nut | 1 |
| 12 | 12702A | Poly Pump Volute | 1 |
| 13 | 12725 | SS Volute Screws | 2 |
| 14 | 12705 | Poly Pump Check Valve | 1 |
| 15 | 12712A | Body Assembly | 1 |
| 16 | 12720 | SS Body Screws | 10 |
| 17 | 12777 | ½" Plug | 2 |
| 18 | UV15163 | Prime/Drain Plug O-Ring | 2 |
| 19 | 12900 | SS Upper Volute Screw | 1 |
| 20 | 12901 | SS Rear Bracket Washer | 4 |
| 21 | 12902A | Impeller Key | 1 |
| 22 | 12716 | Poly Pump Slinger | 1 |
| 23 | 12710 | O-Ring for Seal Assembly | 1 |
| N/S | 12882A | Bearing Pedestal | 1 |
| N/S | 12099 | 7/16"-14 x 1.25" HHCS | 1 |
| KIT | 12000A | 5 Vane Impeller Repair Kit (Items 4-8, 10, 14, 18, 22, 23 & 12099) | 1 |
| KIT | 12000AV | FKM(viton type) Impeller Repair Kit (Items 4-8, 10, 14, 18, 22, 23 & 12099) | 1 |
| KIT | 12999A | Pump Seal/O-Ring Kit (Items 4-7, 10, 18, 22, 23 & 12099) | 1 |
| KIT | 12999AV | FKM(viton type) Pump Seal/O-Ring Kit (Items 4-7, 10, 18, 22, 23 & 12099) | 1 |

| KITS 2" POLY PUMPS | | |
|---|---|---|
| PART NO | REPAIR KIT NO | SEAL KIT NO |
| 200PH-5 | 12000A | 12999A |
| 200PH-5E | 12000A | 12999A |
| 200PH-5V | 12000AV | 12999AV |
| 200PH6 | 12000A | 12999A |
| 200P6PRO | 12000A | 12999A |
| 200P6PROV | 12000AV | 12999AV |
| 200PB | 12003A | 12999A |
| 200PB-V | 12003AV | 12999AV |
| 205PB | 12000A | 12999A |
| 205PB-V | 12000AV | 12999AV |
| 200PO | 12003A | 12999A |
| 200PO-V | 12003AV | 12999AV |
| 205PO | 12000A | 12999A |
| 205PO-V | 12000AV | 12999AV |

# 2" Polypropylene Wet Seal Pumps

**FEATURES**

- New Compact Design!
- Run Dry Capability!
- Double seal contained in ethylene glycol reservoir. Carbon Ceramic seal faces with stainless steel cup & spring with EPDM rubber.
- Pump end separated from engine.
- Large weep holes between pump end and engine.
- "V" shaped for quicker priming.

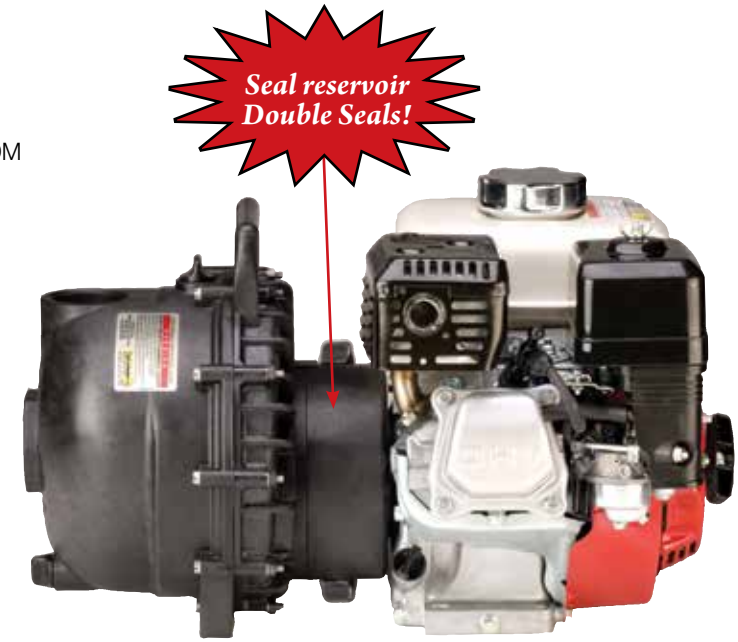


Run Dry Capability!

| 2" POLY WET SEAL PUMPS W/GAS ENGINES | | | |
|---|---|---|---|
| PART NO | DESCRIPTION | HP | QTY |
| 200PH5W | 2" Poly Wet Seal Pump w/5.5 HP Honda® Engine | 5.5 | 1 |
| 200P6PROW | 2" Poly Wet Seal Pump w/6.5 HP Briggs & Stratton® Engine Pro Series | 6.5 | 1 |

Bearing Pedestal
¾" shaft for electric motors

| 2" POLY WET SEAL BEARING PEDESTAL | | | |
|---|---|---|---|
| PART NO | DESCRIPTION | HP | QTY |
| 200PBW | 2" Poly Wet Seal Bearing Pedestal w/ ¾" Shaft & 5 Vane Impeller | N/A | 1 |

DO NOT USE WITH FLAMMABLE LIQUIDS.

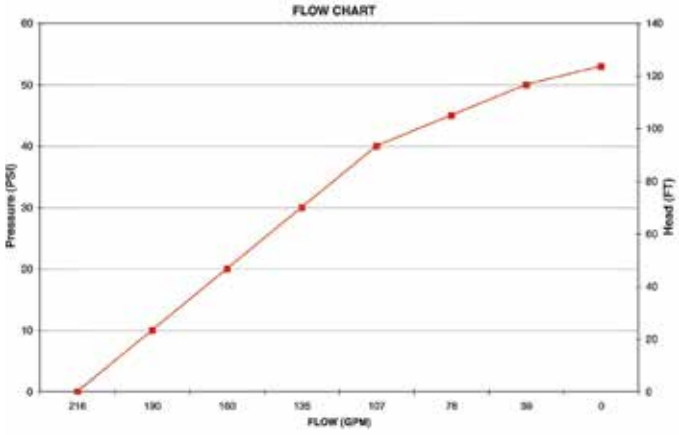

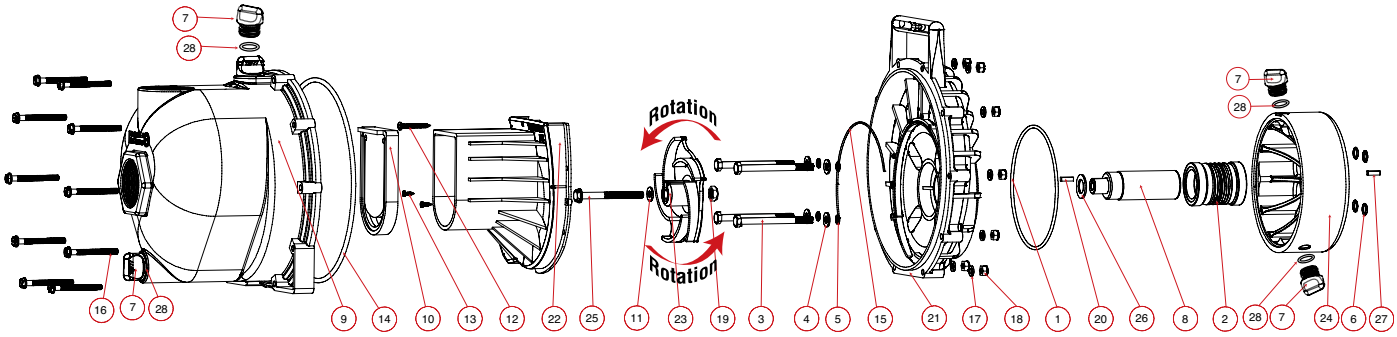


| REPLACEMENT PARTS 2" POLY WET SEAL PUMPS | | | |
|---|---|---|---|
| ITEM | PART NO | DESCRIPTION | QTY |
| 1 | 13719 | O-Ring | 1 |
| 2 | 15035E | EPDM Mechanical Seal Assembly | 1 |
| 3 | 13034 | 5/16" -24 x 3 3/4" HHCS | 4 |
| 4 | 12901 | 5/16" Flat Washer | 4 |
| 5 | 12717 | O-Ring for Bracket Screw | 4 |
| 6 | 12709 | O-Ring | 4 |
| 7 | 12777 | 1/2" Plug | 4 |
| 8 | 12155 | Adapter Shaft | 1 |
| 9 | 12712A | Body Assembly | 1 |
| 10 | 12705 | Check Valve | 1 |
| 11 | 12774VA | Impeller Bolt Gasket | 1 |
| 12 | 12900 | #10 x 1 1/2" PPH SMS | 1 |
| 13 | 12725 | #6 x 1/2" PPH SMS | 2 |
| 14 | 12719A | Body O-Ring | 1 |

| REPLACEMENT PARTS 2" POLY WET SEAL PUMPS | | | |
|---|---|---|---|
| ITEM | PART NO | DESCRIPTION | QTY |
| 15 | 12754 | O-Ring Segment | 1 |
| 16 | 12720 | 1/4" - 20 x 2 1/2" Sl Ind HWHS | 10 |
| 17 | V07018 | 1/4" Lock Washer | 10 |
| 18 | V07019 | 1/4" - 20 Hex Nut | 10 |
| 19 | 12775A | 7/16" - 14 Hex Nut | 1 |
| 20 | 12902A | 3/16" SQ. x 5/8" Key | 2 |
| 21 | 12707W | Wet Seal Rear Bracket | 1 |
| 22 | 12702A | Volute | 1 |
| 23 | 12772 | Impeller | 1 |
| 24 | 12202W | Wet Seal Reservoir | 1 |
| 25 | 12766 | 5/16" - 24 x 3 1/4" HFS | 1 |
| 26 | CV10175 | Gasket | 1 |
| 27 | 12902A | 1/4" SQ. 3/4" Key Stock | 1 |
| 28 | UV15163 | O-Ring for Drain Plug | 4 |

# 2" Polypropylene Pumps with Electric Motors

## FEATURES

- Additional drive unit protection with added 1" spacer for ultimate protection.
- Special non-metallic mechanical seal designed for better chemical resistance.
- All elastomers are FKM (viton type).
- All internal fasteners are PTFE coated stainless steel.
- The Banjo "Super Slinger" included for even more drive unit protection (not shown).

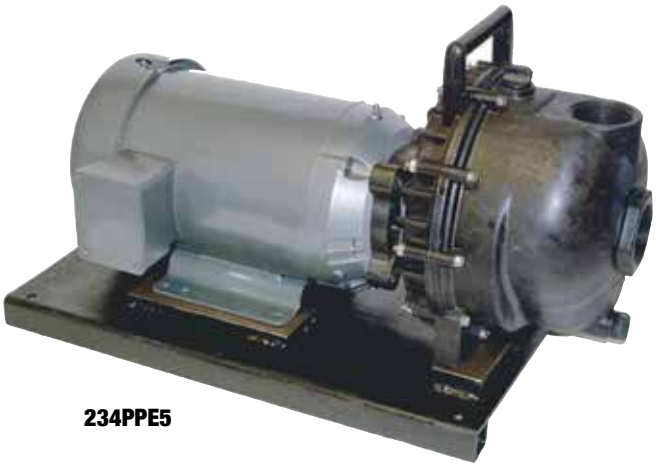

234PPE5

| 2" POLY PUMPS W/ELECTRIC MOTORS | | | |
|---|---|---|---|
| PART NO | DESCRIPTION | HP | QTY |
| 234PPE5 | 2" Poly Pump w/5.0 HP Three Phase Electric Motor w/ EPDM Elastomers | 5.0 | 1 |
| 234PPE5V | 2" Poly Pump w/5.0 HP Three Phase Electric Motor w/ FKM (viton type)Elastomers | 5.0 | 1 |
| 234PPE51 | 2" Poly Pump w/5.0 HP Single Phase Electric Motor w/ EPDM Elastomers | 5.0 | 1 |
| 234PPE51V | 2" Poly Pump w/5.0 HP Single Phase Electric Motor w/ FKM (viton type)Elastomers | 5.0 | 1 |

| 1½" & 2" POLY PUMPS FOR 56C FACED MOTORS | | | |
|---|---|---|---|
| PART NO | DESCRIPTION | HP | QTY |
| 200PEO | 2" Poly Pump w/56C Face Adapter | N/A | 1 |

**CAUTION-WARNING:** Please do not run pump dry, restrict or reduce port sizes, or dead head pump. This could cause component failure to pump.

**DO NOT USE WITH FLAMMABLE LIQUIDS.**

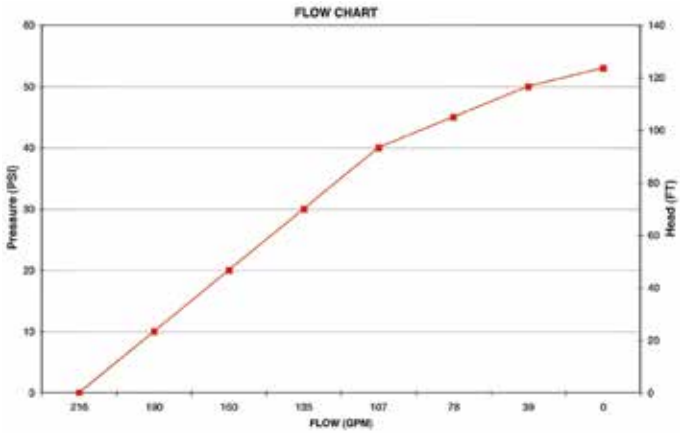

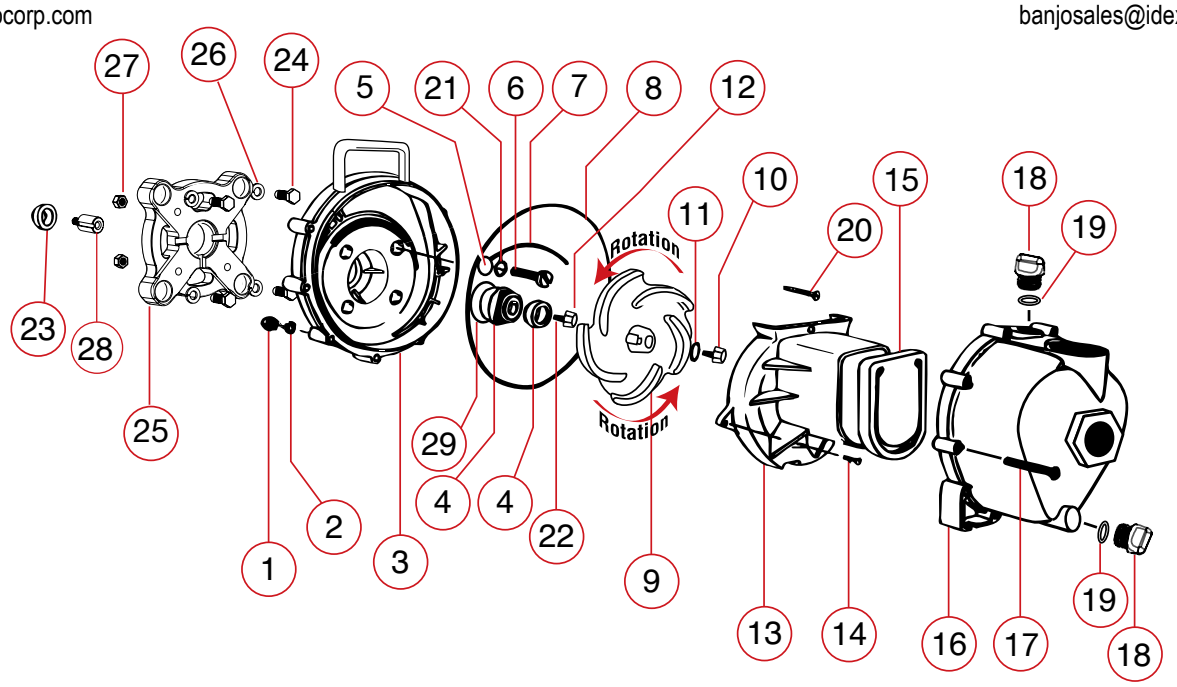


| REPLACEMENT PARTS 2" POLY PUMPS W/ELECTRIC MOTORS | | | |
|---|---|---|---|
| ITEM | PART NO | DESCRIPTION | QTY |
| 1 | V07019 | SS Body Nuts | 10 |
| 2 | V07018 | SS Lock Washers | 10 |
| 3 | 12703A | Poly Pump Rear Bracket | 1 |
| 4 | 12713 | Seal Assembly EPDM | 1 |
| 4 | 12713V | Seal Assembly FKM (viton type) | 1 |
| 5 | 12717 | Screw Heads O-Ring EPDM | 4 |
| 5 | 12717V | Screw Heads O-Ring FKM (viton type) | 4 |
| 6 | BF107 | SS Bracket Screws | 4 |
| 7 | 12754 | O-Ring Segment EPDM | 1 |
| 7 | 12754V | O-Ring Segment FKM (viton type) | 1 |
| 8 | 12719A | Body O-Ring EPDM | 1 |
| 8 | 12719AV | Body O-Ring FKM (viton type) | 1 |
| 9 | 12772 | 5 Vane Impeller | 1 |
| 10 | 12765A | SS Impeller Bolt | 1 |
| 11 | 12774VA | Impeller Bolt Gasket | 1 |
| 12 | 12775A | Impeller Hex Nut | 1 |
| 13 | 12702A | Poly Pump Volut | 1 |
| 14 | 12725 | SS Volute Screws | 2 |
| 15 | 12705 | Poly Pump Check Valve EPDM | 1 |
| 15 | 12705V | Poly Pump Check Valve FKM (viton type) | 1 |
| 16 | 12712A | Body Assembly EPDM | 1 |
| 16 | 12712AV | Body Assembly FKM (viton type) | 1 |
| 17 | 12720 | SS Body Screws | 10 |
| 18 | 12777 | ½" Plug | 2 |
| 19 | UV15163V | Prime/Drain Plug O-Ring | 2 |
| 20 | 12900 | SS Upper Volute Screw | 1 |
| 21 | 12901 | SS Rear Bracket Washer | 4 |
| 22 | 12902A | Impeller Key | 1 |
| 23 | 12710V | O-Ring for Seal Assembly | 1 |
| 24 | 17704 | ⅜"-16 x 1.25" HHCS | 8 |
| 25 | 12046 | 56C Frame Adapter | 1 |
| 26 | V20018 | Lock Washer for 56C Frame Adapter | 8 |
| 27 | V10119 | Nut for 56C Frame Adapter | 4 |
| N/S | 17701 | Base Plate | 1 |
| N/S | 12099 | 7/16"-14 x 1.25" HHCS | 1 |
| N/S | 12052 | 56C Frame Adapter Shaft | 1 |
| N/S | 12756 | 56C Frame Adapter Kit (Items 6, 22, 24-27, 12052, 12053, 15751, 15752) | 1 |

| KITS 1 1/2" & 2" POLY PUMPS | | | |
|---|---|---|---|
| PART NO | REPAIR KIT NO | SEAL KIT NO | FRAME ADAPTER KIT |
| 234PPE5 | 12000A | 12999A | 12756 |
| 234PPE5V | 12000AV | 12999AV | 12756 |
| 234PPE51 | 12000A | 12999A | 12756 |
| 234PPE51V | 12000AV | 12999AV | 12756 |
| 200PEO | 12003A | 12999A | 12756 |

| REPLACEMENT PARTS 1 1/2" & 2" POLY PUMPS | | | |
|---|---|---|---|
| ITEM | PART NO | DESCRIPTION | QTY |
| KIT | 12756 | Frame Adapter Kit (Items 6,22,25,26,17704,12502,12503,15751,15752,17029) | 1 |
| KIT | 12000A | 5 Vane Impeller Repair Kit (Items 4-8, 10, 14, 18, 23 & 12099) | 1 |
| KIT | 12000AV | FKM(viton type) Impeller Repair Kit (Items 4-8, 10, 14, 18, 22, 23 & 12099) | 1 |
| KIT | 12999A | Pump Seal/O-Ring Kit (Items 4-7, 10, 18, 23 & 12099) | 1 |
| KIT | 12999AV | FKM(viton type) Pump Seal/O-Ring Kit (Items 4-7, 10, 18, 23 & 12099) | 1 |

# 2" Polypropylene Hydraulic Pumps

## PUMP FEATURES

- Precision molded construction.
- Lightweight.
- Corrosion resistant.
- Superior design.
- Low maintenance.

## GRESEN® MGG2 HYDRAULIC MOTOR

- Hydraulic fluid capacity
  Minimum 6 Gallons / Maximum 10 Gallons.
- 12 H.P. Motor.
- Open or closed system.
- 3600 R.P.M.

**CAUTION-WARNING:** Please do not run pump dry, restrict or reduce port sizes, or dead head pump. This could cause component failure to pump.

**DO NOT USE WITH FLAMMABLE LIQUIDS.**

| 2" POLY PUMPS W/HYDRAULIC MOTORS | | | |
|---|---|---|---|
| PART NO | DESCRIPTION | HP | QTY |
| 200PHA | 2" Poly Pump without Hydraulic Motor | N/A | 1 |
| 200PHY | 2" Poly Pump w/12 HP Hydraulic Motor | 12.0 | 1 |
| 200PHYW | 2" Poly Wet Seal Pump w/12 HP Hydraulic Motor | 12.0 | 1 |

## SPOOL VALVE ASSEMBLY DIAGRAM

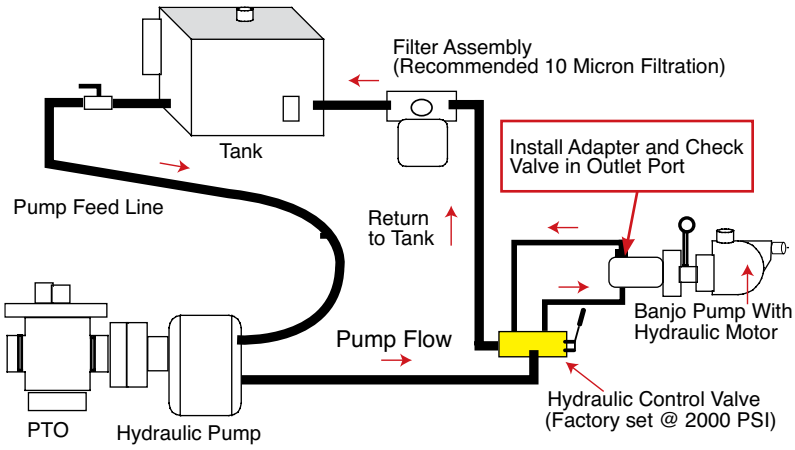

Recommendation:
We recommend using the motor spool control valve or a suitable equivalent. The lack of such a valve in this circuit may cause failure to the hydraulic motor.

| HYDRAULIC MOTOR SPOOL VALVE | | | |
|---|---|---|---|
| PART NO | DESCRIPTION | HP | QTY |
| HSV1000 | Hydraulic Motor Spool Valve | N/A | 1 |

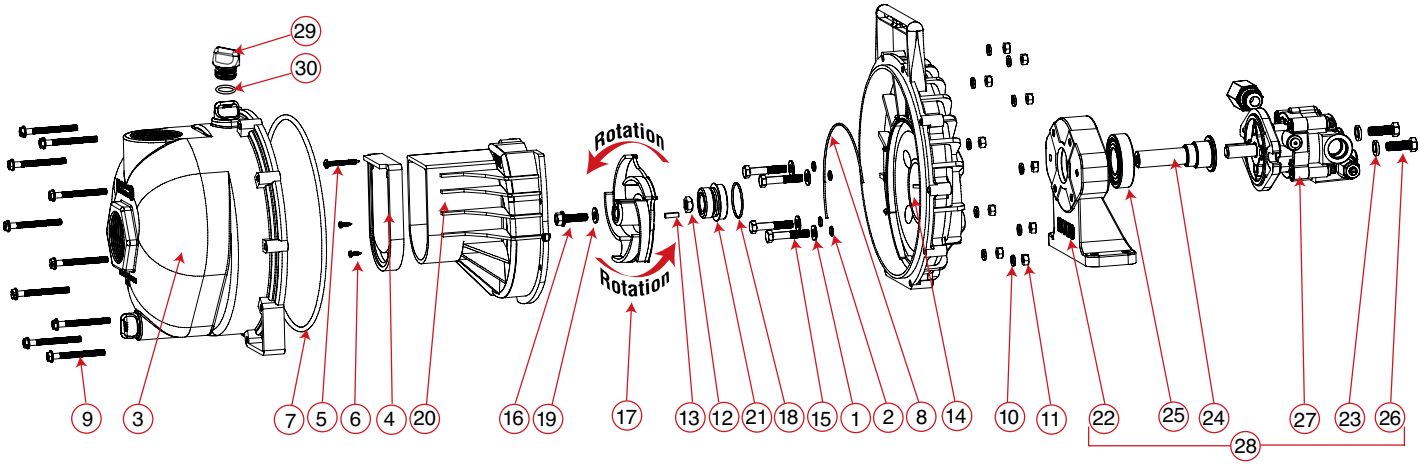


| HYDRAULIC MOTOR DATA | |
|---|---|
| U.S. Gallons/Rev. | 0.0025 |
| Cubic Inches/Rev. | 0.580 |
| Liters/Rev. | 0.0097 |
| Max Hydraulic Pressure | 2000 PSI |
| Min Hydraulic Pressure | 200 PSI |
| Inlet Port | SAE 10 (7/8-14 UNF-2B) |
| Outlet Port | SAE 10 (7/8-14 UNF-2B) |
| Minimum GPM Required | 6 GPM 2400 RPM |
| Maximum GPM Required | 10 GPM 4000 RPM |
| Ideal GPM Required | 9 GPM 3600 RPM |
| **CONNECTION INFORMATION** | |
| Inlet | "A" Port |
| Outlet | "B" Port |
| Supplied check valve is to ensure proper rotation of the Banjo pump. Place check valve in outlet port (marked "B") for proper right hand rotation. | |
| **SPOOL VALVE INFORMATION** | |
| Required Outlet Flow | Min 6 GPM / Max 10 GPM |
| Required System Pressure | Min 600 PSI / Max 3000 PSI |

## KITS 2" POLY PUMPS

| PART NO | EPDM REPAIR KIT NO | FKM REPAIR KIT NO | EPDM SEAL KIT NO | FKM SEAL KIT NO | HYDRAULIC MOTOR SEAL KIT |
|---|---|---|---|---|---|
| 200PHA | 12000A | 12000AV | 12999A | 12999AV | N/A |
| 200PHY | 12000A | 12000AV | 12999A | 12999AV | HY1003 |

**NOTE:** Please see our website for 200PHYW replacement parts.

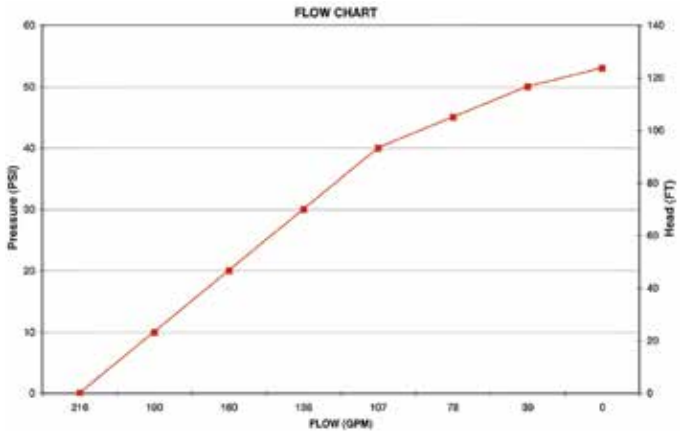


## REPLACEMENT PARTS 2" POLY PUMPS W/ HYDRAULIC ADAPTER

| ITEM | PART NO | DESCRIPTION | QTY |
|---|---|---|---|
| 1 | 12901 | SS Rear Bracket Washer | 4 |
| 2 | 12717 | O-Ring for Screw Heads | 4 |
| 2 | 12717V | FKM (viton type) O-Ring for Screw Heads | 4 |
| 3 | 12712A | Body Assembly | 1 |
| 4 | 12705 | Check Valve | 1 |
| 4 | 12705V | FKM (viton type) Poly Pump Check Valve | 1 |
| 5 | 12900 | SS Upper Volute Screw | 4 |
| 6 | 12725 | SS Volute Screws | 2 |
| 7 | 12719A | Body O-Ring | 1 |
| 8 | 12754 | O-Ring Segment | 1 |
| 8 | 12754V | FKM (viton type) O-Ring Segment | 1 |
| 9 | 12720 | SS Body Screws | 10 |
| 10 | V07018 | SS Lock Washers | 10 |
| 11 | V07019 | SS Body Nuts | 10 |
| 12 | 12775A | Impeller Hex Nut | 1 |
| 13 | 12902A | Impeller Key | 1 |
| 14 | 12703A | Poly Pump Rear Bracket | 1 |
| 15 | 12715A | 5/16"-24 x 1.75" HHCS | 4 |
| 16 | 12765A | SS Impeller Bolt | 1 |
| 17 | 12772 | 5 Vane Impeller | 1 |
| 18 | 12710 | O-Ring for Seal Assembly | 1 |
| 18 | 12710V | FKM (viton type) O-Ring for Seal Assembly | 1 |
| 19 | 12774VA | Impeller Bolt Gasket | 1 |
| 20 | 12702A | Poly Pump Volute | 1 |
| 21 | 12713 | Mechanical Seal Assembly | 1 |
| 22 | 12049E | Hydraulic Pedestal Housing | 1 |
| 23 | V20018 | 3/8" Lock Washer | 2 |
| 24 | 12055E | Adapter Shaft | 1 |
| 25 | 17056E | Bearing | 1 |
| 26 | 18010SS | 3/8"-16 x 1.25" HHCS | 2 |
| 27 | HY1013 | Hydraulic Motor | 1 |
| 28 | 12600B | Complete Hydraulic Assembly | 1 |
| 29 | 12777 | 1/2" Plug | 2 |
| 30 | UV15163 | O-Ring for Plug | 2 |
| N/S | HY1003 | Hydraulic Motor Seal Kit | 2 |

## REPLACEMENT PARTS 2" POLY PUMPS

| ITEM | PART NO | DESCRIPTION | QTY |
|---|---|---|---|
| KIT | 12000A | 5 Vane Impeller Repair Kit (Items 2,4,7,8,17,19,21,30, 12099) | 1 |
| KIT | 12000AV | FKM(viton type) Impeller Repair Kit (Items 2,4,7,8,17,19,21,30, 12099) | 1 |
| KIT | 12999A | Pump Seal/O-Ring Kit (Items 2,4,7,8,17,19,21,30, 12099) | 1 |
| KIT | 12999AV | FKM(viton type) Pump Seal/O-Ring Kit (Items 4-7,8,10,18, 23 & 12099) | 1 |

# 2" Polypropylene Manifold Pumps with Gas Engines

## FEATURES

- Precision molded construction.
- Lightweight.
- Corrosion resistant.
- Superior design.
- Low maintenance.
- EPDM Standard, FKM (viton type) available.

**CAUTION-WARNING:** Please do not run pump dry, restrict or reduce port sizes, or dead head pump. This could cause component failure to pump.

**DO NOT USE WITH FLAMMABLE LIQUIDS.**

**NOTE:** Engine warranty service available at authorized Briggs & Stratton and Honda dealers.

| 2" POLY MANIFOLD BEARING PEDESTALS | | | |
|---|---|---|---|
| PART NO | DESCRIPTION | HP | QTY |
| M220PB | 2" Poly Manifold Bearing Pedestal w/ ¾" Shaft & 4 Vane Impeller | N/A | 1 |

| 2" POLY MANIFOLD PUMP ONLYS | | | |
|---|---|---|---|
| PART NO | DESCRIPTION | HP | QTY |
| M220PO | 2" Poly Manifold Pump Only w/ ¾" Shaft & 4 Vane Impeller | N/A | 1 |

**NOTE:** We recommend using a minimum 5 HP engine.

See page 43-47 for fittings and clamps.

| 2" POLY MANIFOLD PUMPS W/GAS ENGINES | | | |
|---|---|---|---|
| PART NO | DESCRIPTION | HP | QTY |
| M220PH5 | 2" Poly Manifold Pump w/5.5 HP Honda® Engine | 5.5 | 1 |
| M220PH5E | 2" Poly Manifold Pump w/5.5 HP Honda® Engine w/Electric Start | 5.5 | 1 |
| M220PH6 | 2" FP Manifold Pump w/6.5 HP Honda® Engine | 6.5 | 1 |
| M220P6PRO | 2" FP Manifold Pump w/6.5 HP Briggs & Stratton® Pro Series Engine | 6.5 | 1 |
| M220P6PROE | 2" FP Manifold Pump w/6.5 HP Briggs & Stratton® Pro Series Engine w/Electric Start | 6.5 | 1 |

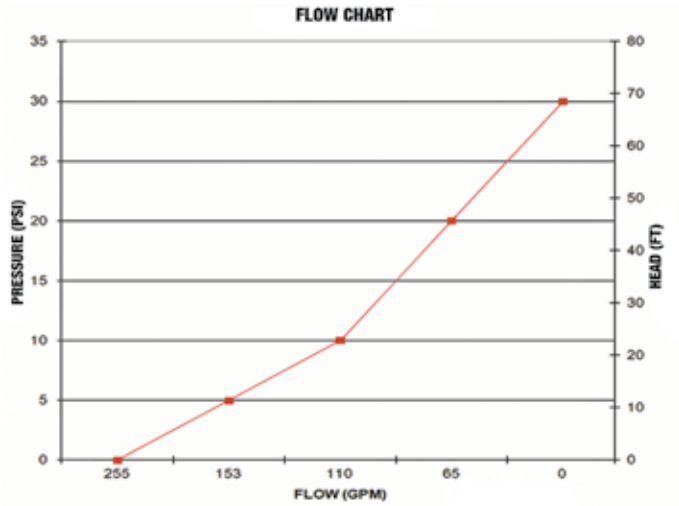

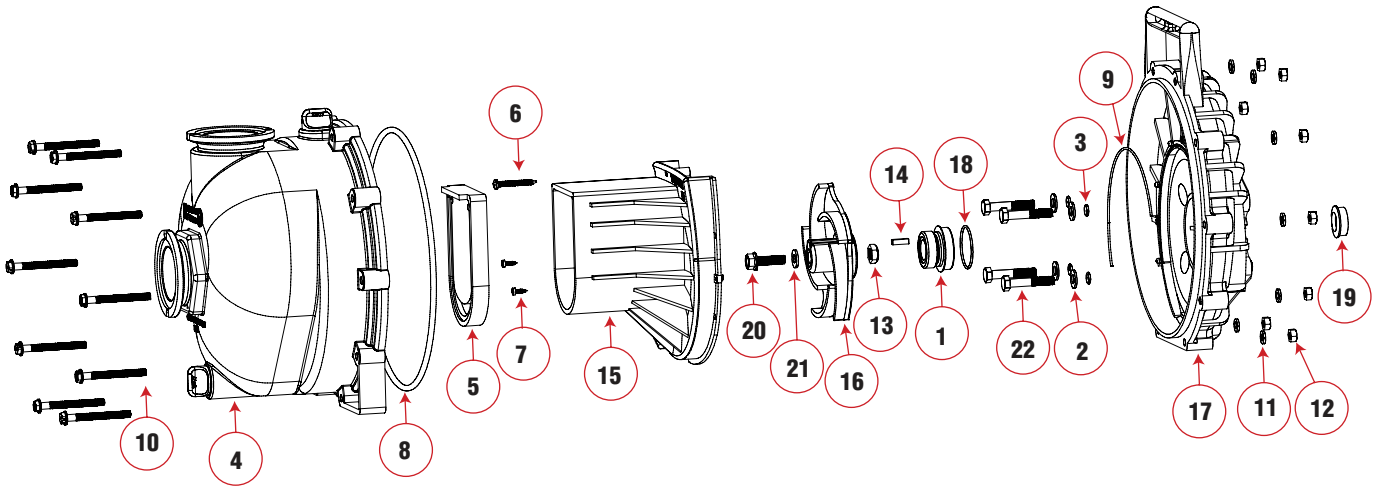


| REPLACEMENT PARTS 2" POLY MANIFOLD PUMPS | | | |
|---|---|---|---|
| ITEM | PART NO | DESCRIPTION | QTY |
| 1 | 12713 | Mechanical Seal Assembly | 1 |
| 2 | 12901 | SS Rear Bracket Washer | 4 |
| 3 | 12717 | O-Ring for Screw Head | 4 |
| 4 | M12712 | 2" FP Manifold Pump Body Assembly | 1 |
| 5 | 12705 | Poly Pump Check Valve | 1 |
| 6 | 12900 | SS Upper Volute Screw | 1 |
| 7 | 12725 | SS Volute Screws | 2 |
| 8 | 12719A | Body O-Ring | 1 |
| 9 | 12754 | O-Ring Segment | 1 |
| 10 | 12720 | SS Body Screws | 10 |
| 11 | V07018 | SS Lock Washers | 10 |

| REPLACEMENT PARTS 2" POLY MANIFOLD PUMPS | | | |
|---|---|---|---|
| ITEM | PART NO | DESCRIPTION | QTY |
| 12 | V07019 | SS Body Nuts | 10 |
| 13 | 12775A | Impeller Hex Nut | 1 |
| 14 | 12902A | Impeller Key | 1 |
| 15 | 12702A | Poly Pump Volute | 1 |
| 16 | 12772 | 5 Vane Impeller | 1 |
| 17 | 12703A | Poly Pump Rear Bracket | 1 |
| 18 | 12710 | O-Ring for Seal Assembly | 1 |
| 19 | 12716 | Poly Pump Slinger | 1 |
| 20 | 12765A | SS Impeller Bolt | 1 |
| 21 | 12774VA | Impeller Bolt Gasket | 1 |
| 22 | 12715A | SS Bracket Screws | 4 |

| KITS 2" MANIFOLD POLY PUMPS | | | | |
|---|---|---|---|---|
| PART NO | EPDM REPAIR KIT NO | FKM REPAIR KIT NO | EPDM SEAL KIT NO | FKM SEAL KIT NO |
| M220PH5 | 12000A | 12000AV | 12999A | 12999AV |
| M220PH5E | 12000A | 12000AV | 12999A | 12999AV |
| M220PH6 | 12000A | 12000AV | 12999A | 12999AV |
| M220P6PRO | 12000A | 12000AV | 12999A | 12999AV |
| M220P6PROE | 12000A | 12000AV | 12999A | 12999AV |
| M220PB | 12000A | 12000AV | 12999A | 12999AV |
| M220PO | 12000A | 12000AV | 12999A | 12999AV |

| REPLACEMENT PARTS 2" MANIFOLD POLY PUMPS | | | |
|---|---|---|---|
| ITEM | PART NO | DESCRIPTION | QTY |
| KIT | 12000A | 5 Vane Impeller Repair Kit (Items 4-8, 10, 14, 18, 22, 23 & 12099) | 1 |
| KIT | 12000AV | FKM(viton type) Impeller Repair Kit (Items 4-8, 10, 14, 18, 22, 23 & 12099) | 1 |
| KIT | 12999A | Pump Seal/O-Ring Kit (Items 4-7, 10, 18, 22, 23 & 12099) | 1 |
| KIT | 12999AV | FKM(viton type) Pump Seal/O-Ring Kit (Items 4-7, 10, 18, 22, 23 & 12099) | 1 |

# 2" Polypropylene Manifold Wet Seal Pumps with Gas Engines

**FEATURES**

- New Compact Design!
- Run Dry Capability!
- Double seal contained in ethylene glycol reservoir. Carbon Ceramic seal faces with stainless steel cup & spring with EPDM rubber.
- Pump end separated from engine.
- Large weep holes between pump end and engine.
- "V" shaped for quicker priming.

*Seal reservoir Double Seals!*

| 2" POLY MANIFOLD WET SEAL PUMPS W/GAS ENGINES | | | |
|---|---|---|---|
| PART NO | DESCRIPTION | HP | QTY |
| M220PH5W | 2" Poly Manifold Wet Seal Pump w/5.5 HP Honda® Engine | 5.5 | 1 |
| M220PH5EW | 2" Poly Manifold Wet Seal Pump w/5.5 HP Honda® Engine w/Electric Start | 5.5 | 1 |
| M220PH6W | 2" Poly Manifold Wet Seal Pump w/6.5 HP Honda® Engine | 6.5 | 1 |
| M220P6PROW | 2" Poly Manifold Wet Seal Pump w/6.5 HP Briggs & Stratton® Engine Pro Series | 6.5 | 1 |
| M220P6PROEW | 2" Poly Manifold Wet Seal Pump w/6.5 HP Briggs & Stratton® Engine Pro Series w/Electric Start | 6.5 | 1 |

*Run Dry Capability!*

| 2" POLY MANIFOLD WET SEAL BEARING PEDESTAL | | | |
|---|---|---|---|
| PART NO | DESCRIPTION | HP | QTY |
| M220PBW | 2" Poly Manifold Wet Seal Bearing Pedestal w/ ¾" Shaft & 5 Vane Impeller | N/A | 1 |

DO NOT USE WITH FLAMMABLE LIQUIDS.

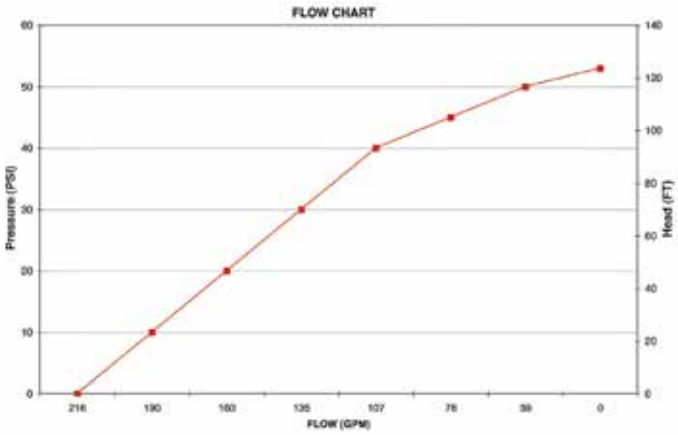

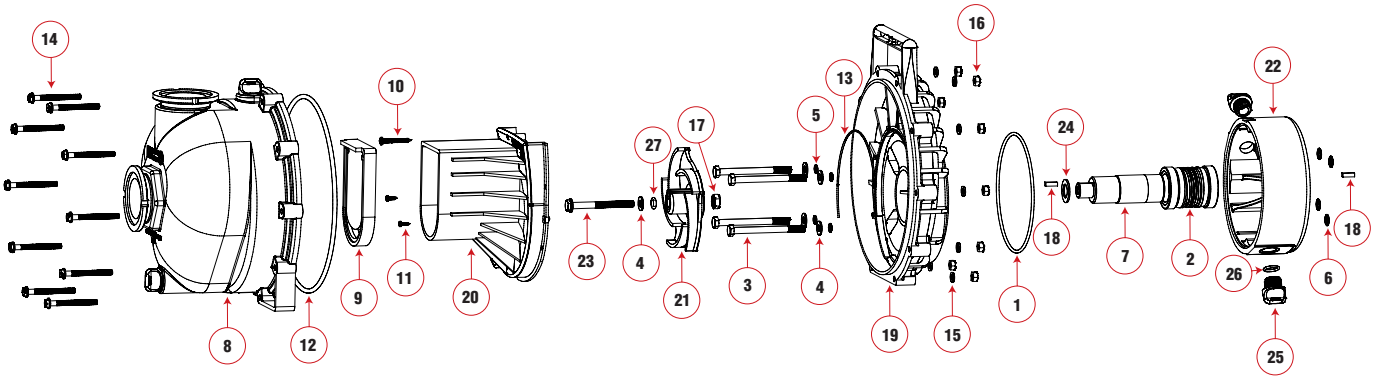


| REPLACEMENT PARTS 2" POLY MANIFOLD WET SEAL PUMPS | | | |
|---|---|---|---|
| ITEM | PART NO | DESCRIPTION | QTY |
| 1 | 13719 | O-Ring | 1 |
| 2 | 15035E | EPDM Mechanical Seal Assembly | 1 |
| 3 | 13034 | 5/16" -24 x 3 1/2" HHCS | 4 |
| 4 | 12901 | SS Rear Bracket Washer | 5 |
| 5 | 12717 | O-Ring for Screw Head | 4 |
| 6 | 12709 | O-Ring | 4 |
| 7 | 12155 | Adapter Shaft | 1 |
| 8 | M12712 | 2" FP Manifold Pump Body Assembly | 1 |
| 9 | 12705 | Poly Pump Check Valve | 1 |
| 10 | 12900 | SS Upper Volute Screw | 1 |
| 11 | 12725 | SS Volute Screws | 2 |
| 12 | 12719A | Body O-Ring | 1 |
| 13 | 12754 | O-Ring Segment | 1 |

| REPLACEMENT PARTS 2" POLY MANFIOLD WET SEAL PUMPS | | | |
|---|---|---|---|
| ITEM | PART NO | DESCRIPTION | QTY |
| 14 | 12720 | SS Body Screws | 10 |
| 15 | V07018 | 1/4" SS Lock Washer | 10 |
| 16 | V07019 | 1/4" SS Nut | 10 |
| 17 | 12775A | Impeller Hex Nut | 1 |
| 18 | 12902A | Impeller Key | 1 |
| 19 | 12707W | Wet Seal Rear Bracket | 1 |
| 20 | 12702A | Poly Pump Volute | 1 |
| 21 | 12772 | Impeller | 1 |
| 22 | 12202W | Wet Seal Reservoir | 1 |
| 23 | 12766 | 5/16" - 24 x 3 1/4" HFS | 1 |
| 24 | CV10175 | Gasket | 1 |
| 25 | 12777 | 1/2" Plug | 2 |
| 26 | UV15163 | Prime/Drain Plug O-Ring | 2 |
| 27 | A203V | O-Ring | 1 |

# 3" Polypropylene Pumps

## PUMP FEATURES

- High strength polypropylene.
- Corrosion resistant.
- Lightweight – portable.
- High performance impellers.
- EPDM Standard, FKM (viton type) available.

## APPLICATIONS

- Agricultural pump.
- Contractor pump.
- Emergency use: fires & floods.

**CAUTION-WARNING:** Please do not run pump dry, restrict or reduce port sizes, or dead head pump. This could cause component failure to pump.

**DO NOT USE WITH FLAMMABLE LIQUIDS.**

**NOTE:** Engine warranty service available at authorized Briggs & Stratton and Honda dealers.

| 3" POLY PUMPS W/GAS ENGINES | | | |
|---|---|---|---|
| PART NO | DESCRIPTION | HP | QTY |
| 300PH-6 | 3" Poly Pump w/6.5 HP Honda® Engine | 6.5 | 1 |
| 300P11PRO | 3" Poly Pump w/11 HP Briggs & Stratton® Engine Pro Series w/Electric Start & Pull Rope | 11 | 1 |

| 3" POLY BEARING PEDESTAL | | | |
|---|---|---|---|
| PART NO | DESCRIPTION | HP | QTY |
| 300PB | 3" Poly Bearing Pedestal w/ ¾" Shaft & 4 Vane Impeller | N/A | 1 |

| 3" POLY PUMP ONLY | | | |
|---|---|---|---|
| PART NO | DESCRIPTION | HP | QTY |
| 300PO | 3" Poly Pump Only w/ ¾" Shaft & 4 Vane Impeller Unassembled | N/A | 1 |

| 3" POLY MANIFOLD PUMPS W/GAS ENGINES | | | |
|---|---|---|---|
| PART NO | DESCRIPTION | HP | QTY |
| M300PH6 | 3" Poly Manifold Pump w/6.5 HP Honda® Engine | 6.5 | 1 |
| M300P6PRO | 3" Poly Manifold Pump w/6.5 HP Briggs & Stratton® Pro Series Engine | 6.5 | 1 |
| M300P11PRO | 3" Poly Manifold Pump w/11 HP Briggs & Stratton® Pro Series Engine | 11 | 1 |

| 3" POLY MANIFOLD BEARING PEDESTAL | | | |
|---|---|---|---|
| PART NO | DESCRIPTION | HP | QTY |
| M300PB | 3" Poly Manifold Bearing Pedestal w/ ¾" Shaft & 4 Vane Impeller | N/A | 1 |

| 3" POLY MANIFOLD PUMP ONLY | | | |
|---|---|---|---|
| PART NO | DESCRIPTION | HP | QTY |
| M300PO | 3" Poly Manifold Pump Only w/ ¾" Shaft & 4 Vane Impeller Unassembled | N/A | 1 |

**Pedestal Pump 300PB & Pump Only 300PO**

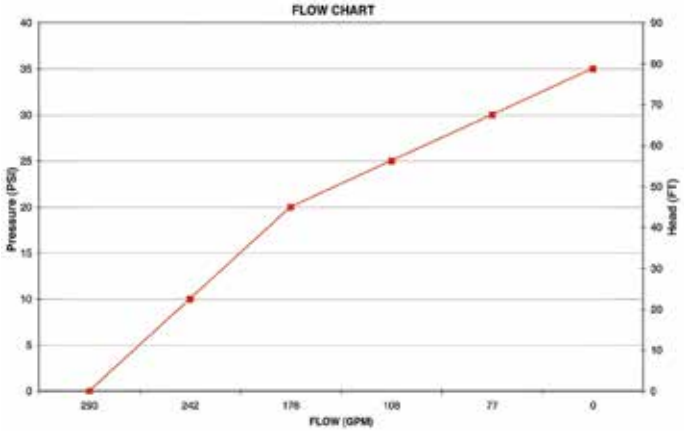

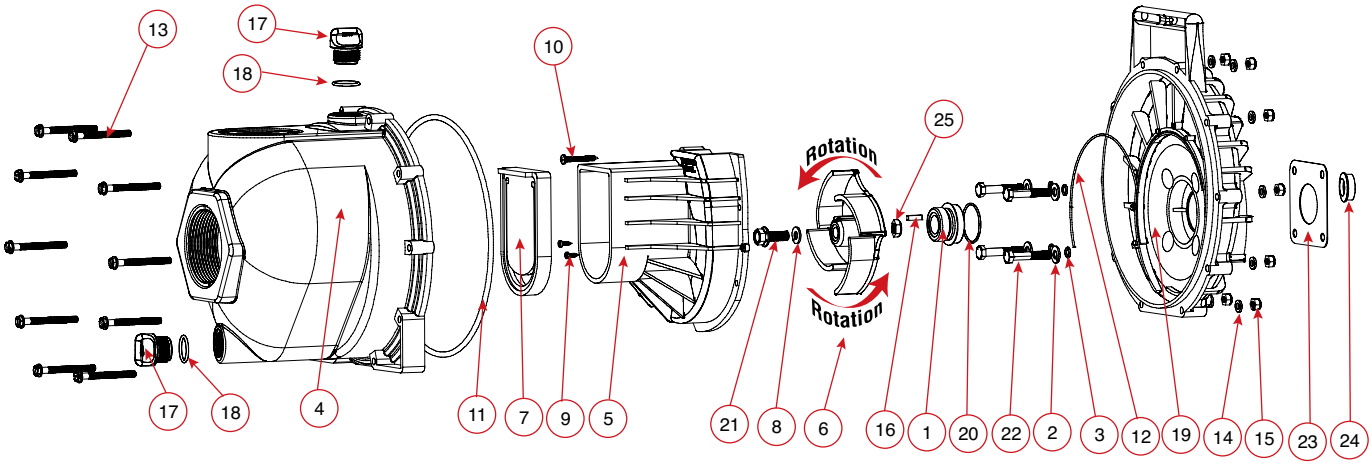


| REPLACEMENT PARTS 3" POLY PUMPS | | | |
|---|---|---|---|
| ITEM | PART NO | DESCRIPTION | QTY |
| 1 | 12713 | Seal Assembly | 1 |
| 1 | 12713V | FKM (viton type) Seal Assembly w/316 SS Cup & Spring | 1 |
| 2 | 12901 | SS Rear Bracket Washer | 4 |
| 3 | 12717 | O-Ring for Screw Head | 4 |
| 3 | 12717V | FKM (viton type) O-RIng for Screw Head | 4 |
| 4 | 13712 | Body Assembly | 1 |
| 5 | 13702 | Poly Pump Volute | 1 |
| 6 | 13771 | 4 Vane Trimmed Impeller (300PH-6, 300PB & 300PO) | 1 |
| 6 | 13772 | 4 Vane Impeller(300P11PRO) | 1 |
| 7 | 12705 | Check Valve | 1 |
| 7 | 12705V | FKM (viton type) Pump Check Valve | 1 |
| 8 | 12774VA | Impeller Bolt Gasket | 1 |
| 9 | 12900 | SS Upper Volute Screw | 4 |
| 10 | 12725 | SS Volute Screws | 2 |
| 11 | 12719A | Body O-Ring | 1 |
| 11 | 12719AV | FKM (viton type) Body O-Ring | 8 |
| 12 | 12754 | O-Ring Segment | 1 |
| 12 | 12754V | FKM (viton type) O-Ring Segment | 1 |
| 13 | 12720 | SS Body Screws | 10 |
| 14 | V07018 | SS Lock Washers | 10 |
| 15 | V07019 | SS Body Nuts | 10 |

| REPLACEMENT PARTS 3" POLY PUMPS | | | |
|---|---|---|---|
| ITEM | PART NO | DESCRIPTION | QTY |
| 16 | 12902A | Impeller Key | 1 |
| 17 | 13777 | ¾" Plug | 2 |
| 18 | 13778 | O-Ring | 2 |
| 18 | 13778V | FKM (viton type) Prime/Drain Plug O-Ring | 2 |
| 19 | 12703A | Poly Pump Rear Bracket | 1 |
| 20 | 12710 | O-Ring for Seal Assembly | 1 |
| 20 | 12710V | FKM (viton type) O-Ring for Seal Assembly | 1 |
| 21 | 12765A | SS Impeller Bolt 5/16 x 24 x 1.12 (300PH-6) | 1 |
| 21 | 13765 | SS Impeller Bolt 3/8 x 24 x 1.75 (300P11PRO) | 1 |
| 22 | 12715A | SS Bracket Screws | 4 |
| 23 | 15751 | Rear Bracket Shim | 1 |
| 24 | 12716 | Poly Pump Slinger | 1 |
| 25 | 12775A | Impeller Hex Nut | 1 |
| N/S | 12882A | Bearing Pedestal | 1 |
| N/S | 12099 | 7/16"-14 x 1.25" HHCS | 1 |
| N/S | 13000 | 4 Vane Impeller Repair Kit (Items 1, 3, 6-8, 11, 12, 18, 20, 24 & 12099) | 1 |
| N/S | 13000V | 4 Vane Impeller FKM (viton type) Repair Kit (Items 1, 3, 6-8, 11, 12, 18, 20, 24 & 12099) | 1 |
| N/S | 13999 | Pump Seal/O-Ring Kit (Items 1, 3, 8, 11, 12, 18, 20, 24 & 12099) | 1 |
| N/S | 13999V | FKM(viton type) Pump Seal/O-Ring Kit (Items 1, 3, 8, 11, 12, 18, 20, 24 & 12099) | 1 |

| KITS 3" POLY MANIFOLD PUMPS | | | | |
|---|---|---|---|---|
| PART NO | EPDM REPAIR KIT NO | FKM REPAIR KIT NO | EPDM SEAL KIT NO | FKM SEAL KIT NO |
| 300PH-6 | 13000 | 13000V | 13999 | 13999V |
| 300P11PRO | 13000 | 13000V | 13999 | 13999V |
| 300PB | 13000 | 13000V | 13999 | 13999V |
| 300PO | 13000 | 13000V | 13999 | 13999V |
| M300PH6 | 13000 | 13000V | 13999 | 13999V |
| M300P6PRO | 13000 | 13000V | 13999 | 13999V |
| M300P11PRO | 13000 | 13000V | 13999 | 13999V |
| M300PB | 13000 | 13000V | 13999 | 13999V |

# 3" Polypropylene Pumps with Hydraulic Motors

### HYDRAULIC MOTOR

- Hydraulic fluid capacity
  Minimum 6 gallons / Maximum 10 gallons.
- 12 H.P. Motor.
- Open or closed system.
- 3600 RPM.

**CAUTION-WARNING:** Please do not run pump dry, restrict or reduce port sizes, or dead head pump. This could cause component failure to pump.

**DO NOT USE WITH FLAMMABLE LIQUIDS.**

| 3" POLY PUMPS W/HYDRAULIC MOTORS | | | |
|---|---|---|---|
| PART NO | DESCRIPTION | HP | QTY |
| 300PHY | 3" Poly Pump w/12 HP Hydraulic Motor | 12 | 1 |
| 300PHYW | 3" Poly Wet Seal Pump w/12 HP Hydraulic Motor | 12 | 1 |

### SPOOL VALVE ASSEMBLY DIAGRAM

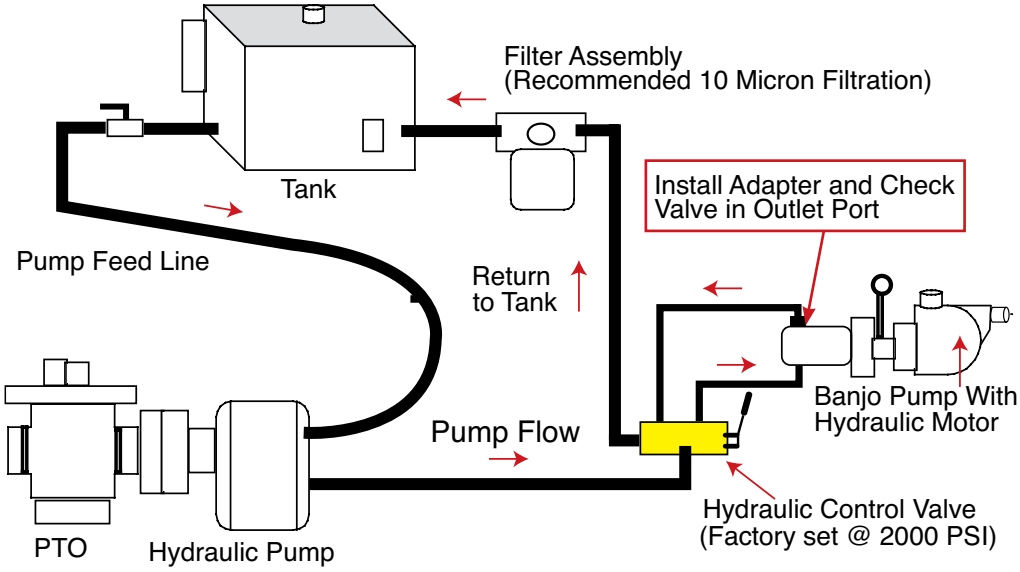

Recommendation:
We recommend using the motor spool control valve or a suitable equivalent. The lack of such a valve in this circuit may cause failure to the hydraulic motor.

| HYDRAULIC MOTOR SPOOL VALVE | | | |
|---|---|---|---|
| PART NO | DESCRIPTION | HP | QTY |
| HSV1000 | Hydraulic Motor Spool Valve | N/A | 1 |

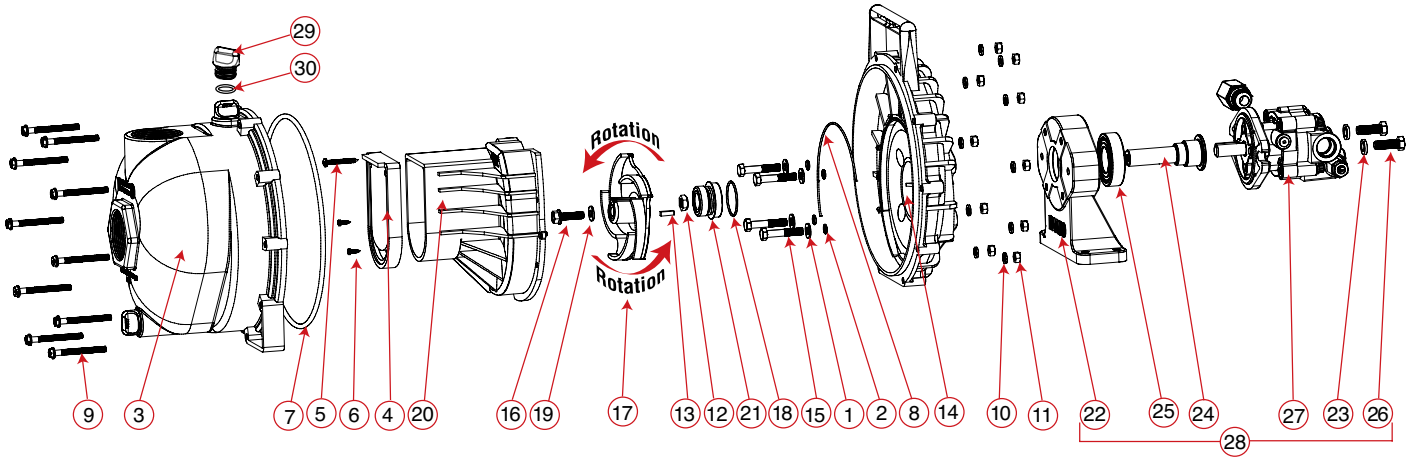


| HYDRAULIC MOTOR DATA | |
|---|---|
| U.S. Gallons/Rev. | 0.0025 |
| Cubic Inches/Rev. | 0.580 |
| Liters/Rev. | 0.0097 |
| Max Hydraulic Pressure | 2000 PSI |
| Min Hydraulic Pressure | 200 PSI |
| Inlet Port | SAE 10 (7/8-14 UNF-2B) |
| Outlet Port | SAE 10 (7/8-14 UNF-2B) |
| Minimum GPM Required | 6 GPM 2400 RPM |
| Maximum GPM Required | 10 GPM 4000 RPM |
| Ideal GPM Required | 9 GPM 3600 RPM |
| **CONNECTION INFORMATION** | |
| Inlet | "A" Port |
| Outlet | "B" Port |
| Supplied check valve is to ensure proper rotation of the Banjo pump. Place check valve in outlet port (marked "B") for proper right hand rotation. | |
| **SPOOL VALVE INFORMATION** | |
| Required Outlet Flow | Min 6 GPM / Max 10 GPM |
| Required System Pressure | Min 600 PSI / Max 3000 PSI |

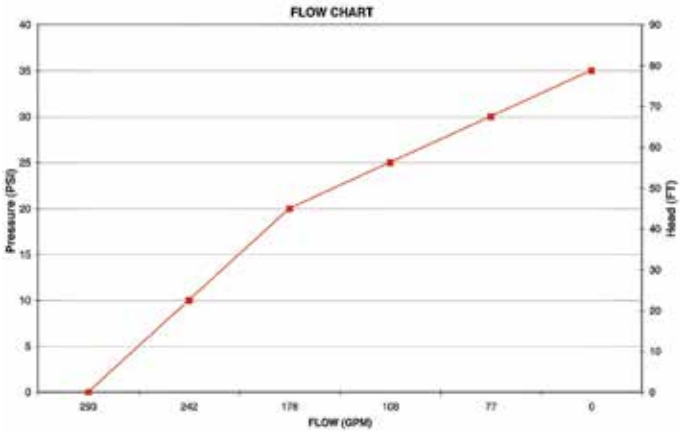


## KITS 3" POLY HYDRAULIC PUMPS

| PART NO | EPDM REPAIR KIT NO | FKM REPAIR KIT NO | EPDM SEAL KIT NO | FKM SEAL KIT NO | HYDRAULIC MOTOR SEAL KIT |
|---|---|---|---|---|---|
| 300PHY | 13000 | 13000V | 13999 | 13999V | HY1013 |

**NOTE:** Please see our website for 300PHYW replacement parts.

## REPLACEMENT PARTS 3" POLY PUMPS W/ HYDRAULIC ADAPTER

| ITEM | PART NO | DESCRIPTION | QTY |
|---|---|---|---|
| 1 | 12901 | SS Rear Bracket Washer | 4 |
| 2 | 12717 | O-Ring for Screw Heads | 4 |
| 2 | 12717V | FKM (viton type) O-Ring for Screw Heads | 4 |
| 3 | 13712 | Body Assembly | 1 |
| 4 | 12705 | Check Valve | 1 |
| 4 | 12705V | FKM (viton type) Pump Check Valve | 1 |
| 5 | 12900 | SS Upper Volute Screw | 4 |
| 6 | 12725 | SS Volute Screws | 2 |
| 7 | 12719A | Body O-Ring | 1 |
| 8 | 12754 | O-Ring Segment | 1 |
| 8 | 12754V | FKM (viton type) O-Ring Segment | 1 |
| 9 | 12720 | SS Body Screws | 10 |
| 10 | V07018 | SS Lock Washers | 10 |
| 11 | V07019 | SS Body Nuts | 10 |
| 12 | 12775A | Impeller Hex Nut | 1 |
| 13 | 12902A | Impeller Key | 1 |
| 14 | 12703A | Poly Pump Rear Bracket | 1 |
| 15 | 12715A | 5/16"-24 x 1.75" HHCS | 4 |
| 16 | 12765A | SS Impeller Bolt | 1 |
| 17 | 13771 | 4 Vane Impeller | 1 |
| 18 | 12710 | O-Ring for Seal Assembly | 1 |
| 18 | 12710V | FKM (viton type) O-Ring for Seal Assembly | 1 |
| 19 | 12774VA | Impeller Bolt Gasket | 1 |
| 20 | 13702 | Poly Pump Volute | 1 |
| 21 | 12713 | Mechanical Seal Assembly | 1 |
| 22 | 12049E | Hydraulic Pedestal Housing (Must order 17056E & 12055E) | 1 |
| 23 | V20018 | 3/8" Lock Washer | 2 |
| 24 | 12055B | Adapter Shaft | 1 |
| 25 | 17056 | Bearing | 1 |
| 26 | 18010SS | 3/8"-16 x 1.25" HHCS | 2 |
| 27 | HY1013 | Hydraulic Motor | 1 |
| 28 | 12600B | Complete Hydraulic Assembly | 1 |
| 29 | 13777 | 3/4" Plug | 2 |
| 30 | 13778 | O-Ring | 2 |

## REPLACEMENT PARTS 3" POLY PUMPS

| ITEM | PART NO | DESCRIPTION | QTY |
|---|---|---|---|
| KIT | 13000 | 4 Vane Impeller Repair Kit (Items 2,4,7-8,16-19, 21, 30, 12099) | 1 |
| KIT | 13000V | 4 Vane Impeller FKM (viton type) Repair Kit (Items 2,4,7-8,16-19, 21, 30, 12099) | 1 |
| KIT | 13999 | Pump Seal/O-Ring Kit (Items 2,4,7-8,16,18,19, 21, 30, 12099) | 1 |
| KIT | 13999V | FKM(viton type) Pump Seal/O-Ring Kit (Items 2,4,7-8,16, 18,19, 21, 30, 12099) | 1 |

# 3" Polypropylene Manifold Wet Seal Pumps with Gas Engines

## FEATURES

- New Compact Design!
- Run Dry Capability!
- Double seal contained in ethylene glycol reservoir. Carbon Ceramic seal faces with stainless steel cup & spring with EPDM rubber.
- Pump end separated from engine.
- Large weep holes between pump end and engine.
- "V" shaped for quicker priming.

*Run Dry Capability!*

*Seal reservoir Double Seals!*

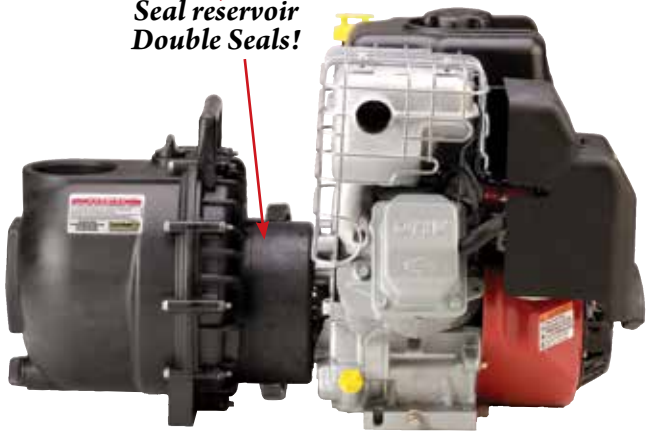

| 3" POLY WET SEAL PUMPS W/GAS ENGINES | | | |
|---|---|---|---|
| PART NO | DESCRIPTION | HP | QTY |
| 300PH6W | 3" Poly Wet Seal Pump w/6.0 HP Honda® Engine | 6.0 | 1 |
| 300PH11W | 3" Poly Wet Seal Pump w/11 HP Honda® Engine w/Electric Start & Pull Rope | 11 | 1 |
| 300P11PROW | 3" Poly Wet Seal Pump w/11 HP Briggs & Stratton® Engine Pro Series w/Electric Start & Pull Rope | 11 | 1 |
| 300PH13W | 3" Poly Wet Seal Pump w/13 HP Honda® Engine w/Electric Start & Pull Rope | 13 | 1 |

Truck shipments only.

| 3" POLY MANIFOLD WET SEAL PUMPS W/GAS ENGINES | | | |
|---|---|---|---|
| PART NO | DESCRIPTION | HP | QTY |
| M300PH6W | 3" Poly Manifold Wet Seal Pump w/6.0 HP Honda® Engine | 6.0 | 1 |
| M300PH11W | 3" Poly Manifold Wet Seal Pump w/11 HP Honda® Engine w/ Electric Start & Pull Rope | 11 | 1 |
| M300P11PROW | 3" Poly Wet Seal Pump w/11 HP Briggs&Stratton® Engine Pro Series w/ Pull Rope | 11 | 1 |

| 3" POLY WET SEAL BEARING PEDESTAL | | | |
|---|---|---|---|
| PART NO | DESCRIPTION | HP | QTY |
| 300PBW | 3" Poly Wet Seal Bearing Pedestal w/ ¾" Shaft & 4 Vane Impeller | N/A | 1 |

| 3" POLY MANIFOLD WET SEAL BEARING PEDESTAL | | | |
|---|---|---|---|
| PART NO | DESCRIPTION | HP | QTY |
| M300PBW | 3" Poly Manifold Wet Seal Bearing Pedestal w/ ¾" Shaft & 4 Vane Impeller | N/A | 1 |

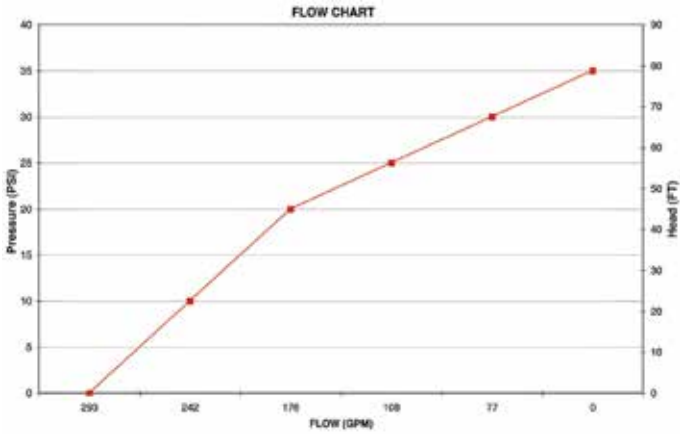


DO NOT USE WITH FLAMMABLE LIQUIDS.

PUMPS

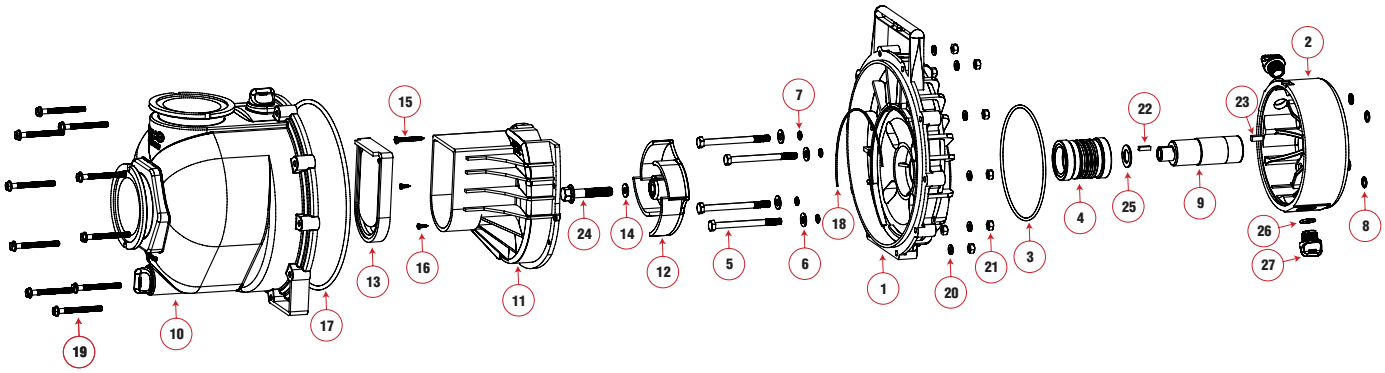


| REPLACEMENT PARTS 3" MANIFOLD POLY WET SEAL PUMPS | | | |
|---|---|---|---|
| ITEM | PART NO | DESCRIPTION | QTY |
| 1 | 12703AW | Wet Seal Rear Bracket for 11 HP Honda® Engine & 11 HP Briggs & Stratton® Engine | 1 |
| 1 | 12707W | Wet Seal Rear Bracket for 6 HP Honda® Engine, 6 HP Briggs & Stratton® Engine & Bearing Pedestal | 1 |
| 2 | 12201W | Wet Seal Reservoir for 11 HP Honda® Engine & 11 HP Briggs & Stratton® Engine | 1 |
| 2 | 12202W | Wet Seal Reservoir for 6 HP Honda® Engine,6 HP Briggs & Stratton® Engine & Bearing Pedestal | 1 |
| 3 | 13719 | O-Ring | 1 |
| 4 | 15035E | Mechanical Seal Assembly EPDM | 1 |
| 5 | 13034 | 5/16" - 24 x 3 3/4" HHCS | 4 |
| 6 | 12901 | 5/16" Flat Washer | 4 |
| 7 | 12717 | O-Ring for Bracket Screw | 4 |
| 8 | 12709 | O-Ring | 4 |
| 9 | 12155 | Manifold Adapter Shaft for 6 HP Honda® Engine,6 HP Briggs & Stratton® Engine & Bearing Pedestal | 1 |
| 9 | 13055 | Adapter Shaft for 11 HP Honda® Engine & 11 HP Briggs & Stratton® Engine | 1 |
| 10 | M13712 | Manifold Body Assembly | 1 |
| 10 | 13712 | Body Assembly | 1 |
| 11 | 13702 | Volute | 1 |
| 12 | 13772 | Impeller | 1 |

| REPLACEMENT PARTS 3" MANIFOLD POLY WET SEAL PUMPS | | | |
|---|---|---|---|
| ITEM | PART NO | DESCRIPTION | QTY |
| 13 | 12705 | Check Valve | 1 |
| 14 | 12774VA | Impeller Bolt Gasket | 1 |
| 15 | 12900 | #10 x 1 1/2" PPH SMS 18-8 SS | 1 |
| 16 | 12725 | #6 x 1/2" PPH SMS 18-8 SS | 1 |
| 17 | 12719A | Body O-Ring | 1 |
| 18 | 12754 | O-Ring Segment | 1 |
| 19 | 12720 | 1/4" - 20 x 2 1/2" SI Ind HWHS | 10 |
| 20 | V07018 | 1/4" Lock Washer | 10 |
| 21 | V07019 | 1/4" - 20 Hex Nut | 10 |
| 22 | 12902A | 3/16" SQ. x 5/8" Key | 1 |
| 23 | 16901 | 1/4" SQ. 3/4" Key Stock | 1 |
| 24 | 14766 | 7/16" - 20 x 2 1/2" HFS for 11 HP Honda® Engine & 11 HP Briggs & Stratton® Engine (Manifold) | 1 |
| 24 | 12766 | 5/16"-24 x 3 1/4" HFS for 6 HP Honda® Engine,6 HP Briggs & Stratton® Engine & Bearing Pedestal (Manifold) | 1 |
| 24 | 13766 | 3/8" - 24 x 2 1/4" HFS for 11 HP Honda® Engine & 11 HP Briggs & Stratton® Engine | 1 |
| 25 | CV10175 | Gasket | 1 |
| 26 | UV15163 | O-Ring (manifold) | 2 |
| 26 | 13778 | O-Ring | 2 |
| 27 | 13777 | 3/4" Plug | 2 |
| 27 | 12777 | 1/2" Plug (manifold) | 2 |

# 1½" Cast Iron Pumps

## FEATURES

- Cast iron construction for rugged dependable service.
- Stainless steel shaft sleeve to protect engine shaft.
- Carbon ceramic seal with stainless steel cup and spring with FKM (viton type) rubber.
- Replaceable inlet and outlet flanges.
- Dynamically balanced impeller.

## FEATURES

- Pump Only packs complete and ready for attachment to gasoline engine.
- Pedestal pump for long coupling to electric motor.

## IMPORTANT

- Recommended horsepower, listed below, is for water only. Heavier fluids may require additional horsepower or a trimmed impeller.

**CAUTION-WARNING:** Please do not run pump dry, restrict or reduce port sizes, or dead head pump. This could cause component failure to pump.

**DO NOT USE WITH FLAMMABLE LIQUIDS.**

**NOTE:** Engine warranty service available at authorized Briggs & Stratton and Honda dealers.

**SHIPPING**: Pumps are truck shipments only.

**1½" CAST IRON PUMP ONLY**

| PART NO | DESCRIPTION | HP | QTY |
|---|---|---|---|
| 150POI | 1½" Cast Iron Pump Only w/ ¾" Shaft Sleeve | N/A | 1 |

**1½" CAST IRON BEARING PEDESTAL**

| PART NO | DESCRIPTION | HP | QTY |
|---|---|---|---|
| 150PBI | 1½" Cast Iron Bearing Pedestal w/ ¾" Straight Shaft* | N/A | 1 |

**1½" CAST IRON C-FLANGE PUMPS**

| PART NO | DESCRIPTION | HP | QTY |
|---|---|---|---|
| 150POICF5/8-4.1 | 1½" Cast Iron C-Flange Pump w/ 5/8" Shaft Sleeve* & 4.1 Impeller | N/A | 1 |
| 150POICF7/8 | 1½" Cast Iron C-Flange Pump w/ 7/8" Shaft Sleeve* | N/A | 1 |
| 150POICF7/8-4.1 | 1½" Cast Iron C-Flange Pump w/ 7/8" Shaft Sleeve* & 4.1 Impeller | N/A | 1 |
| 150POICF7/8-4.6 | 1½" Cast Iron C-Flange Pump w/ 7/8" Shaft Sleeve* & 4.6 Impeller | N/A | 1 |

* Recommendation for 5/8" Shaft: 56C Frame Size, 3 HP, 3450 RPM, & 5" Max Impeller for close coupling to electric motors.

7/8" Shaft: 145TC Frame Size, 3 HP, 3450 RPM, & 5" Max Impeller for close coupling to electric motors.

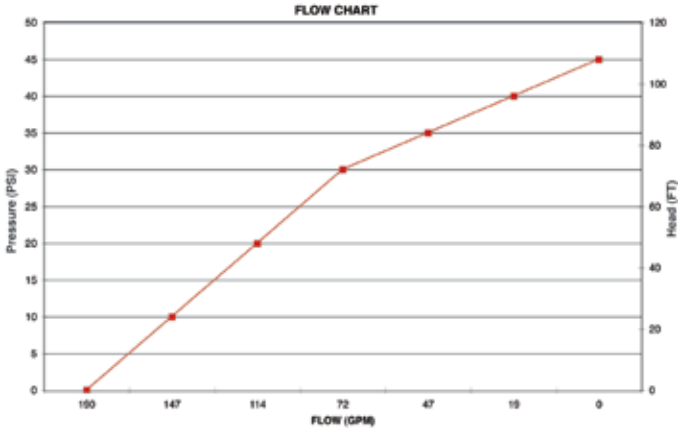

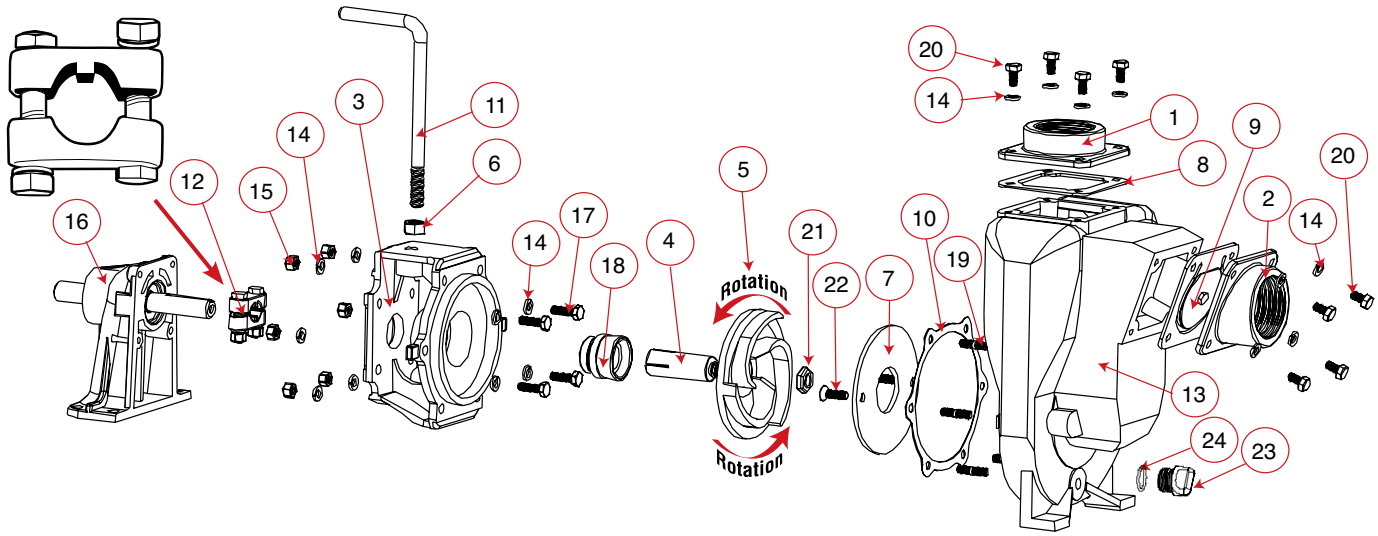


| REPLACEMENT PARTS 1½" CAST IRON PUMPS | | | |
|---|---|---|---|
| ITEM | PART NO | DESCRIPTION | QTY |
| 1 | 17001 | Threaded Outlet Flange | 1 |
| 2 | 17003 | Threaded Inlet Flange | 1 |
| 3 | 17004 | Adapter for Gas Engine | 1 |
| 3 | 17046 | C-Flange Adapter | 1 |
| 4 | 17005 | 5/8" Sleeve Drive for Electric Motor | 1 |
| 4* | 17006 | 3/4" Sleeve Drive | 1 |
| 4 | 17007 | 7/8" Sleeve Drive for Electric Motor | 1 |
| 5* | 17008 | 5" Impeller | 1 |
| 5 | 17008-4.6 | 4.6" Trimmed Impeller | 1 |
| 5 | 17008-4.1 | 4.1" Trimmed Impeller | 1 |
| 6 | 17010 | 1/2" Hex Nut | 1 |
| 7* | 17011 | Wear Plate | 1 |
| 8 | 17013 | EPDM Gasket | 1 |
| 9 | 17016 | Check Valve Assembly | 1 |
| 10* | 17018 | Gasket Adapter | 1 |
| 11 | 15022 | Handle | 1 |
| 12 | 17023 | 5/8" Clamp for 3/4" Shaft Assembly (Old Style) | 1 |
| 12 | 17123 | 5/8" Clamp for 3/4" Shaft Assembly (Keyed) | 1 |
| 12 | 17024 | 7/8" Clamp for Shaft Assembly | 1 |

| REPLACEMENT PARTS 1½" CAST IRON PUMPS | | | |
|---|---|---|---|
| ITEM | PART NO | DESCRIPTION | QTY |
| 13 | 17026 | Pump Housing | 1 |
| 14 | V10118 | 5/16" Lock Washer | 18 |
| 15 | V10119 | 5/16" - 18 SS Hex Nut | 6 |
| N/S | 12884 | Internal Retaining Clip for Pedestal | 1 |
| N/S | 12883B | Bearings | 2 |
| 16 | 12882A | Complete Pedestal Assembly | 1 |
| 17 | 17040 | 5/16" -24 x 1.00" Cap Screw | 4 |
| 18 | 17028 | EPDM Seal Assembly | 1 |
| 18* | 17035 | FKM (viton type) Seal Assembly | 1 |
| 18 | 17035SD | Severe Duty Seal | 1 |
| 19 | 17042 | Stud | 6 |
| 20 | 17019 | 5/16"-18 x 3/4" Cap Screw | 8 |
| 21 | 17009B | 5/8" Impeller Nut | 1 |
| 22 | 17130 | 5/16-18 x 1.00" FHSCS, 18-8 SS | 2 |
| 23 | 12777 | 1/2" Plug | 1 |
| 24 | UV15163 | O-Ring | 1 |
| N/S | 17033 | Z Rails (Pair) | 1 |
| N/S | 17100 | Repair Kit (Consists of items 4*, 5*, 7,10,18*) | 1 |

# 2" Cast Iron Pumps

## FEATURES

- Cast iron construction for rugged dependable service.
- Stainless steel shaft sleeve to protect engine shaft.
- Carbon ceramic seal with stainless steel cup and spring with FKM (viton type) rubber.
- Replaceable inlet and outlet flanges.
- Dynamically balanced impeller.

**CAUTION-WARNING:** Please do not run pump dry, restrict or reduce port sizes, or dead head pump. This could cause component failure to pump.

**DO NOT USE WITH FLAMMABLE LIQUIDS.**

**NOTE:** Engine warranty service available at authorized Briggs & Stratton and Honda dealers.
**SHIPPING**: Pumps are truck shipments only.

| 2" CAST IRON PUMPS W/GAS ENGINES | | | |
|---|---|---|---|
| PART NO | DESCRIPTION | HP | QTY |
| 200PI-3 | 2" Cast Iron Pump w/3.5 HP Briggs & Stratton® Engine | 3.5 | 1 |
| 200PI6PRO | 2" Cast Iron Pump w/6.5 HP Briggs & Stratton® Engine Pro Series | 6.5 | 1 |
| 200PIH-5 | 2" Cast Iron Pump w/5.5 HP Honda® Engine | 5.5 | 1 |
| 200PIH5E | 2" Cast Iron Pump w/5.5 HP Honda® Engine w/Electric Start | 5.5 | 1 |

| 2" CAST IRON PUMP ONLY | | | |
|---|---|---|---|
| PART NO | DESCRIPTION | HP | QTY |
| 200POI | 2" Cast Iron Pump Only w/ ¾" Shaft Sleeve | N/A | 1 |

| 2" CAST IRON BEARING PEDESTAL | | | |
|---|---|---|---|
| PART NO | DESCRIPTION | HP | QTY |
| 200PBI | 2" Cast Iron Bearing Pedestal w/ ¾" Straight Shaft* | N/A | 1 |

Note:* ¾" straight shaft for long coupling to electric motors

| 2" CAST IRON C-FLANGE PUMPS | | | |
|---|---|---|---|
| PART NO | DESCRIPTION | HP | QTY |
| 200POICF5/8 | 2" Cast Iron C-Flange Pump w/ ⅝" Shaft Sleeve* | N/A | 1 |
| 200POICF7/8 | 2" Cast Iron C-Flange Pump w/ ⅞" Shaft Sleeve* | N/A | 1 |
| 200POICF7/8-4.6 | 2" Cast Iron C-Flange Pump w/ ⅞" Shaft Sleeve* & 4.6 Impeller | N/A | 1 |



Note: * Recommendation for ⅝" Shaft: 56C Frame Size, 3 HP, 3450 RPM, & 5" Max Impeller for close coupling to electric motors.
⅞" Shaft: 145TC Frame Size, 3 HP, 3450 RPM, & 5" Max Impeller for close coupling to electric motors.

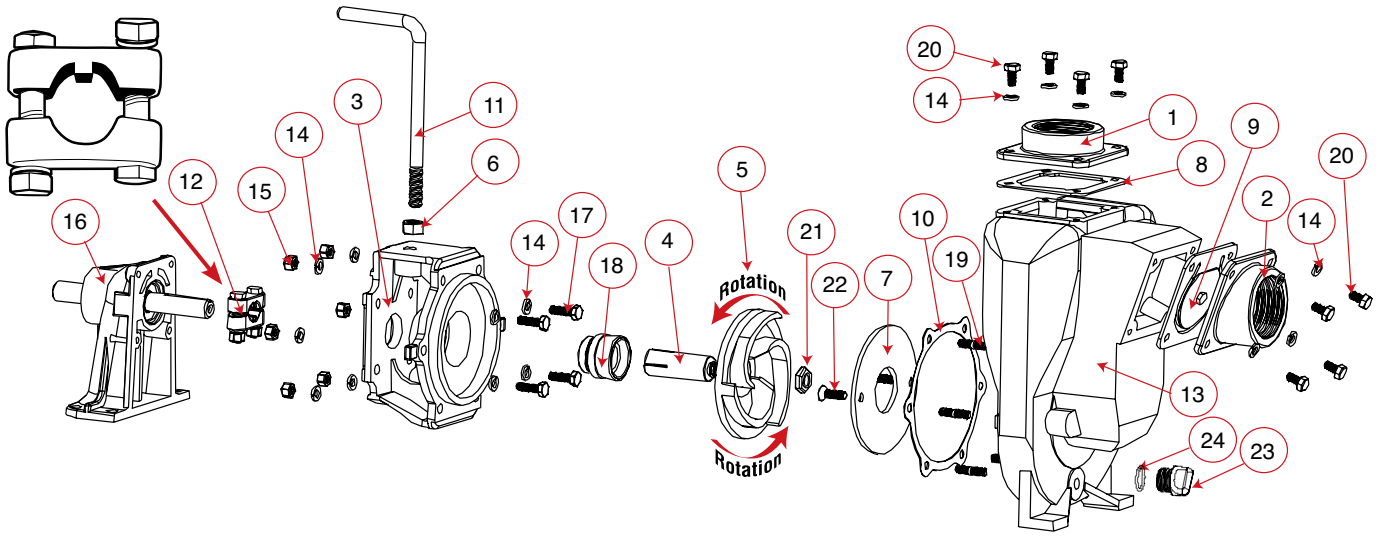


| REPLACEMENT PARTS 2" CAST IRON PUMPS | | | |
|---|---|---|---|
| ITEM | PART NO | DESCRIPTION | QTY |
| 1 | 17000 | Threaded Outlet Flange | 1 |
| 1 | M17000 | 2" Manifold Outlet Flange | 1 |
| 2 | 17002 | Threaded Inlet Flange | 1 |
| 2 | M17002 | 2" Manifold Inlet Flange | 1 |
| 3 | 17004 | Adapter for Gas Engine | 1 |
| 3 | 17046 | C-Flange Adapter | 1 |
| 4 | 17005 | 5/8" Sleeve Drive for Electric Motor | 1 |
| 4* | 17006 | 3/4" Sleeve Drive | 1 |
| 4 | 17007 | 7/8" Sleeve Drive for Electric Motor | 1 |
| 5* | 17008 | 5" Impeller | 1 |
| 5 | 17008-4.6 | 4.6" Trimmed Impeller | 1 |
| 5 | 17008-4.1 | 4.1" Trimmed Impeller | 1 |
| 6 | 17010 | 1/2" Hex Nut | 1 |
| 7* | 17011 | Wear Plate | 1 |
| 8 | 17013 | EPDM Gasket | 1 |
| 9 | 17016 | Check Valve Assembly | 1 |
| 10* | 17018 | Gasket Adapter | 1 |
| 11 | 15022 | Handle | 1 |
| 12 | 17023 | 5/8" Clamp for 3/4" Shaft Assembly (Old Style) | 1 |
| 12 | 17123 | 5/8" Clamp for 3/4" Shaft Assembly (Keyed) | 1 |
| 12 | 17024 | 7/8" Clamp for Shaft Assembly | 1 |

| REPLACEMENT PARTS 2" CAST IRON PUMPS | | | |
|---|---|---|---|
| ITEM | PART NO | DESCRIPTION | QTY |
| 13 | 17026 | Pump Housing | 1 |
| 14 | V10118 | 5/16" Lock Washer | 18 |
| 15 | V10119 | 5/16" - 18 SS Hex Nut | 6 |
| N/S | 12884 | Internal Retaining Clip for Pedestal | 1 |
| N/S | 12883B | Bearings | 2 |
| 16 | 12882A | Complete Pedestal Assembly | 1 |
| 17 | 17040 | 5/16" -24 x 1.00" Cap Screw | 4 |
| 18 | 17028 | EPDM Seal Assembly | 1 |
| 18* | 17035 | FKM (viton type) Seal Assembly | 1 |
| 18 | 17035SD | Severe Duty Seal | 1 |
| 19 | 17042 | Stud | 6 |
| 20 | 17019 | 5/16"-18 x 3/4" Cap Screw | 8 |
| 21 | 17009B | 5/8" Impeller Nut | 1 |
| 22 | 17130 | 5/16-18 x 1.00" FHSCS, 18-8 SS | 2 |
| 23 | 12777 | 1/2" Plug | 1 |
| 24 | UV15163 | O-Ring | 1 |
| N/S | 17033 | Z Rails (Pair) | 1 |
| N/S | 17100 | Repair Kit (Consists of items 4*, 5*, 7,10,18*) | 1 |

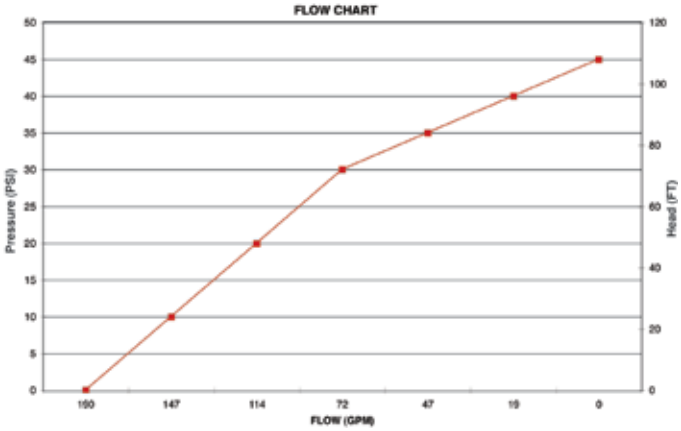

# 2" Wet Seal Cast Iron Pump

Pump Seal & Engine Protection

**FEATURES**

- Run Dry Capability!
- FKM (viton type) double seal contained in ethylene glycol reservoir.
- Dynamically balanced impeller.
- All stainless steel hardware.
- Available in cast iron or 316 stainless steel, with bearing pedestal, gas engine or pump only.

**NOTE:** Engine warranty service available at authorized Briggs & Stratton and Honda dealers.

***SHIPPING**: Truck shipments only.

Run Dry Capability!

*Seal reservoir double seals!*

| 2" CAST IRON WET SEAL PUMPS W/GAS ENGINES | | | |
|---|---|---|---|
| PART NO | DESCRIPTION | HP | QTY |
| 201PIH5W | 2" Cast Iron Wet Seal Pump w/5.5 HP Honda® Engine | 5.5 | 1 |
| 201PI6PROW | 2" Cast Iron Wet Seal Pump w/6.5 HP Briggs & Stratton® Engine Pro Series | 6.5 | 1 |

Bearing Pedestal
¾" shaft for electric motors

Pump Only
for gas engine

*See page 135 for available base plate.

| POLYETHYLENE SUCTION BASKET STRAINER | | |
|---|---|---|
| PART NO | DESCRIPTION | QTY |
| 200SBS | 2" Female Thread Poly Basket | 1 |
| 300SBS | 3" Female Thread Poly Basket | 1 |

| 2" CAST IRON WET SEAL BEARING PEDESTALS | | | |
|---|---|---|---|
| PART NO | DESCRIPTION | HP | QTY |
| 201PBIW | 2" Cast Iron Wet Seal Pump w/Bearing Pedestal | N/A | 1 |

| 2" CAST IRON WET SEAL PUMP ONLYS | | | |
|---|---|---|---|
| PART NO | DESCRIPTION | HP | QTY |
| 201POIW | 2" Cast Iron Wet Seal Pump Only | N/A | 1 |

DO NOT USE WITH FLAMMABLE LIQUIDS.

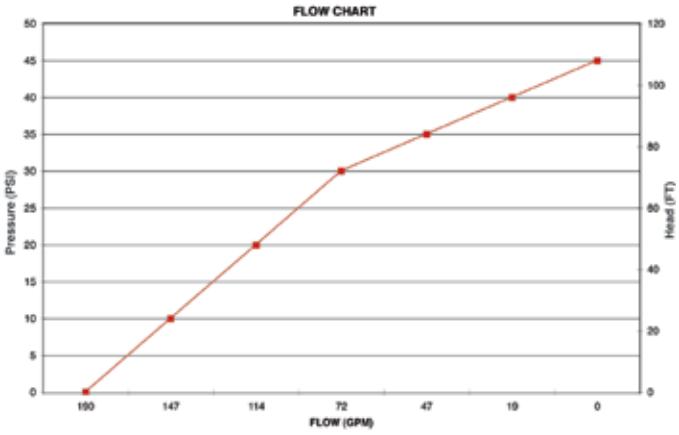

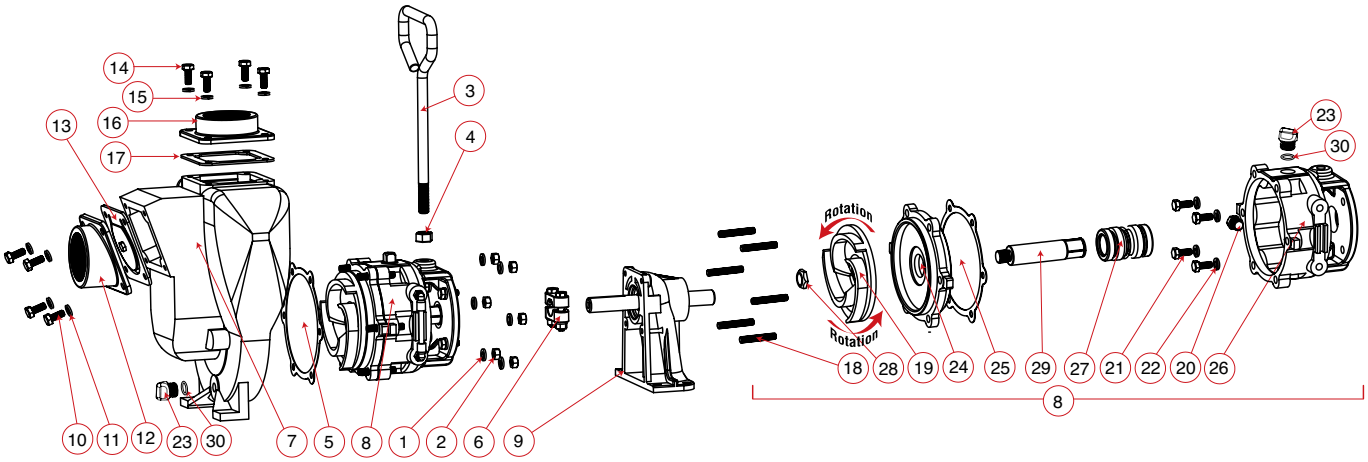


| REPLACEMENT PARTS 2" CAST IRON WET SEAL PUMPS | | | |
|---|---|---|---|
| ITEM | PART NO | DESCRIPTION | QTY |
| 1 | V10118 | 5/16" Lock Washer | 6 |
| 2 | V10119 | 5/16" -18 Hex Nut | 6 |
| 3 | 15022 | Handle | 1 |
| 4 | 17010 | ½" Hex Nut | 1 |
| 5 | 17018 | Gasket Adapter | 1 |
| 6 | 17123 | 5/8" Clamp, ¾" Shaft Assembly Keyed | 1 |
| 7 | 17226 | Pump Housing | 1 |
| 8 | 17200A | Wet Seal Assembly | 1 |
| 9 | 12882A | Bearing Pedestal | 1 |
| 10 | 17019 | 5/16"-18 x ¾" HHCS | 4 |
| 11 | V10118 | 5/16" Lock Washer | 4 |
| 12 | 17002 | Inlet Flange | 1 |
| 13 | 17016 | EPDM Check Valve Gasket Assembly | 1 |
| 14 | 17019 | 5/16" -18 x ¾" HHCS | 4 |
| 15 | V10118 | 5/16" Lock Washer | 4 |

| REPLACEMENT PARTS 2" CAST IRON WET SEAL PUMPS | | | |
|---|---|---|---|
| ITEM | PART NO | DESCRIPTION | QTY |
| 16 | 17000 | Outlet Flange | 1 |
| 17 | 17013 | EPDM Outlet Gasket | 1 |
| 18 | 17242 | Housing Stud | 6 |
| 19 | 17208 | Impeller | 1 |
| 20 | 17032 | Pipe Plug | 1 |
| 21 | 17019 | 5/16"-18 x ¾" Cap Screw | 4 |
| 22 | V10118 | 5/16" Lock Washer | 4 |
| 23 | 12777 | ½" Plug | 2 |
| 24 | 17202 | Cover Plate | 1 |
| 25 | 17018 | Gasket Adapter | 1 |
| 26 | 17201A | Reservoir | 1 |
| 27 | 17235 | FKM (viton type) Mechanical Seal Assembly | 1 |
| 28 | 17009B | 5/8" Impeller Nut | 1 |
| 29 | 17206A | Adapter Shaft | 1 |
| 30 | UV15163 | O-Ring | 2 |

# 2" Cast Iron Pumps with Electric Motors

## FEATURES

- Cast iron construction for rugged dependable service.
- Stainless steel shaft sleeve to protect engine shaft.
- Carbon ceramic seal with stainless steel cup and spring with FKM (viton type) rubber.
- Replaceable inlet and outlet flanges.
- Dynamically balanced impeller.

**CAUTION-WARNING:** Please do not run pumps dry, restrict or reduce port sizes or dead head pumps. This could cause component failure to pump.

**DO NOT USE WITH FLAMMABLE LIQUIDS.**

| 2" CAST IRON PUMPS W/ELECTRIC MOTORS | | | |
|---|---|---|---|
| PART NO | DESCRIPTION | HP | QTY |
| 234PIE3 | 2" Cast Iron Pump w/3.0 HP Three Phase Electric Motor | 3.0 | 1 |
| 234PIE5 | 2" Cast Iron Pump w/5.0 HP Three Phase Electric Motor | 5.0 | 1 |
| 234PIE51 | 2" Cast Iron Pump w/5.0 HP Single Phase Electric Motor | 5.0 | 1 |

| 2" CAST IRON PUMP ONLY | | | |
|---|---|---|---|
| PART NO | DESCRIPTION | HP | QTY |
| 234POI | 2" Cast Iron Pump Only w/ 184TC Frame Adapter | N/A | 1 |

**NOTE:** Truck shipments only. Motor warranty service available at authorized dealers.

| POLYETHYLENE SUCTION BASKET STRAINER | | |
|---|---|---|
| PART NO | DESCRIPTION | QTY |
| 200SBS | 2" Female Thread Poly Basket | 1 |
| 300SBS | 3" Female Thread Poly Basket | 1 |

## COMPLETE PUMP WITH EFFICIENT INDUSTRIAL ELECTRIC MOTORS!

### MOTOR FEATURES:

- Pressure cast aluminum end plates with ribbed design for rigidity.
- Ball bearings, locked drive end bearing.
- Heavy gauge steel frame.
- Motors wound with inverter spike resistance magnet wire.
- Mounted complete on heavy duty cast iron base plate.
- 230 V Motors.

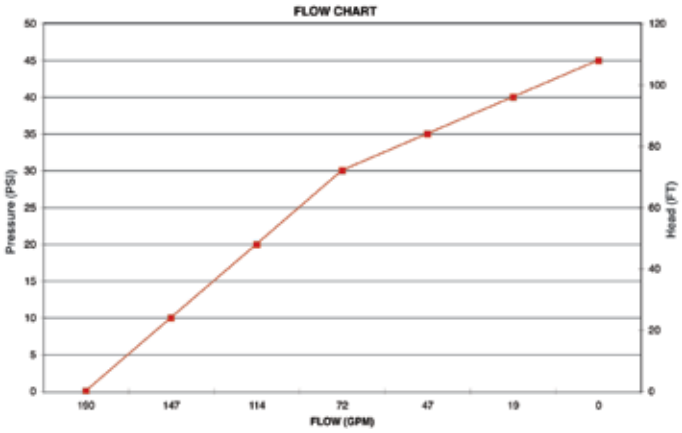

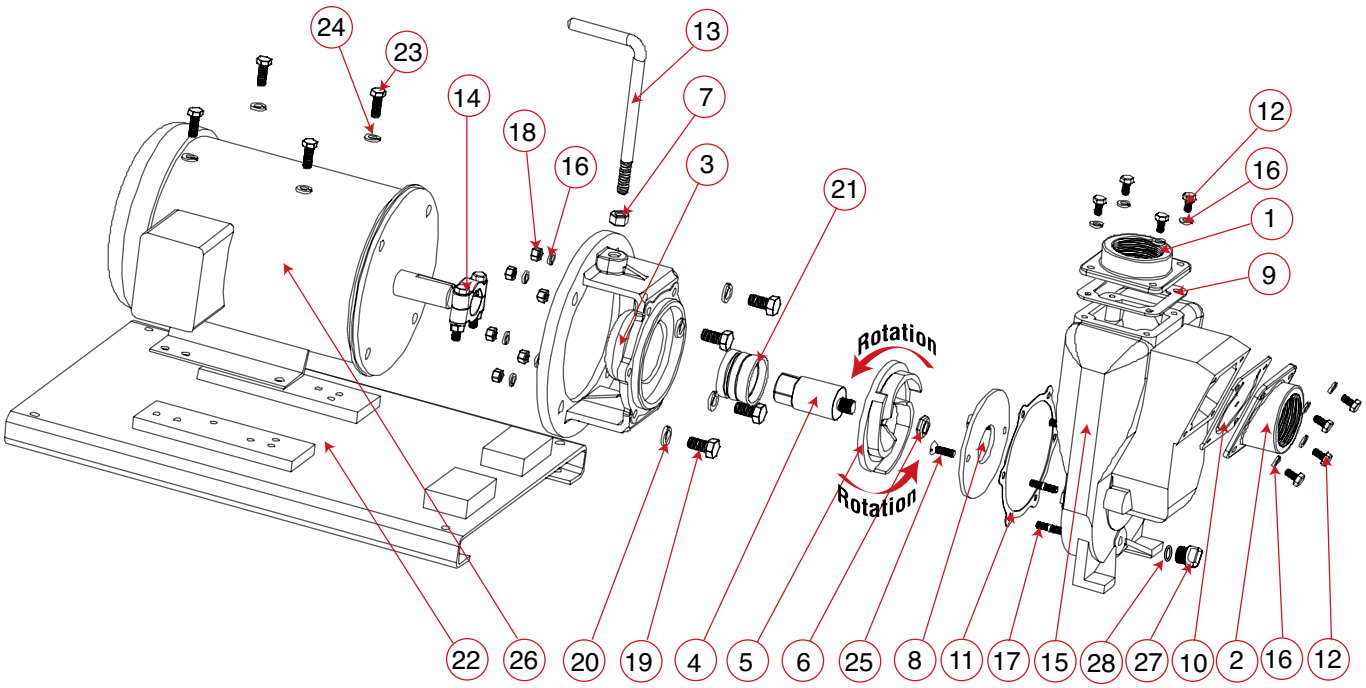


| REPLACEMENT PARTS 234PIE3 | | | |
|---|---|---|---|
| ITEM | PART NO | DESCRIPTION | QTY |
| 1 | 17000 | Outlet Flange | 1 |
| 2 | 17002 | Inlet Flange | 1 |
| 3 | 17046 | C-Flange Adapter | 1 |
| 4 | 17007 | Impeller Shaft | 1 |
| 5 | 17008 | Impeller | 1 |
| 6 | 17009B | 5/8" Impeller Nut | 1 |
| 7 | 17010 | 1/2" Hex Nut | 1 |
| 8 | 17011 | Wear Plate | 1 |
| 9 | 17013 | Outlet Gasket | 1 |
| 10 | 17016 | Gasket & Check Valve | 1 |
| 11 | 17018 | Gasket Adapter | 1 |
| 12 | 17019 | Bolt | 8 |
| 13 | 15022 | Handle | 1 |
| 14 | 17024 | Clamp Assembly w/Key | 1 |
| 15 | 17026 | Pump Housing | 1 |
| 16 | V10118 | 5/16" Lock Washer | 20 |
| 17 | 17042 | Housing Stud | 6 |
| 18 | V10119 | Hex Nut | 8 |
| 19 | 17449 | Bolt | 4 |
| 20 | 18058 | Washer | 4 |
| 21 | 17035 | Seal Assembly | 1 |
| 22 | 17701 | Base Plate Assembly | 1 |
| 23 | 17704 | Bolt | 4 |
| 24 | V20018 | 3/8" Lock Washer | 4 |
| 25 | 17130 | 5/16-18 x 1.00" FHSCS, 18-8 SS | 2 |
| 26 | BEM3 | Electric Motor | 1 |
| 27 | 12777 | 1/2" Plug | 1 |
| 28 | UV15163 | O-Ring for Drain Plug | 1 |

| REPLACEMENT PARTS 234PIE5 & 234PIE51 | | | |
|---|---|---|---|
| ITEM | PART NO | DESCRIPTION | QTY |
| 1 | 17000 | Outlet Flange | 1 |
| 2 | 17002 | Inlet Flange | 1 |
| 3 | 17446 | C-Flange Adapter | 1 |
| 4 | 17406 | Impeller Shaft | 1 |
| 5 | 17408 | Impeller | 1 |
| 6 | 17009B | 5/8" Impeller Nut | 1 |
| 7 | 17010 | 1/2" Hex Nut | 1 |
| 8 | 17011 | Wear Plate | 1 |
| 9 | 17013 | Outlet Gasket | 1 |
| 10 | 17016 | Gasket & Check Valve | 1 |
| 11 | 17018 | Gasket Adapter | 1 |
| 12 | 17019 | Bolt | 8 |
| 13 | 15022 | Handle | 1 |
| 14 | 18129 | Clamp Assembly w/Key | 1 |
| 15 | 17026 | Pump Housing | 1 |
| 16 | V10118 | 5/16" Lock Washer | 20 |
| 17 | 17042 | Housing Stud | 6 |
| 18 | V10119 | Hex Nut | 8 |
| 19 | 17449 | Bolt | 4 |
| 20 | 18058 | Washer | 4 |
| 21 | 18025 | Seal Assembly | 1 |
| 22 | 17701 | Base Plate Assembly | 1 |
| 23 | 17704 | Bolt | 4 |
| 24 | V20018 | 3/8" Lock Washer | 4 |
| 25 | 17130 | 5/16-18 x 1.00" FHSCS, 18-8 SS | 2 |
| 26 | BEM5 | Electric Motor | 1 |
| 26 | BEM51 | Electric Motor | 1 |
| 27 | 12777 | 1/2" Plug | 1 |
| 28 | UV15163 | O-Ring for Drain Plug | 1 |

# 2" Cast Iron Pumps with Hydraulic Motors

### PUMP FEATURES

- Rugged construction for dependable service.
- Carbon ceramic seal with stainless steel cup and spring with FKM (viton type) rubber.
- Replaceable inlet and outlet flanges.
- Dynamically balanced impeller.

### HYDRAULIC MOTOR FEATURES

- Hydraulic fluid capacity
  Minimum 6 Gallons / Maximum 10 Gallons.
- 12 H.P. Motor.
- Open or closed system.
- Minimum 500 P.S.I. / Maximum 2000 P.S.I.

**CAUTION-WARNING:** Please do not run pumps dry, restrict or reduce port sizes or dead head pumps. This could cause component failure to pump.

**DO NOT USE WITH FLAMMABLE LIQUIDS.**

| 2" CAST IRON HYDRAULIC PUMPS | | | |
|---|---|---|---|
| PART NO | DESCRIPTION | HP | QTY |
| 200PIHY | 2" Cast Iron Pump w/12 HP Hydraulic Motor | 12 | 1 |
| 200PIHA | 2" Cast Iron Pump Only without Motor | N/A | 1 |

### SPOOL VALVE ASSEMBLY DIAGRAM

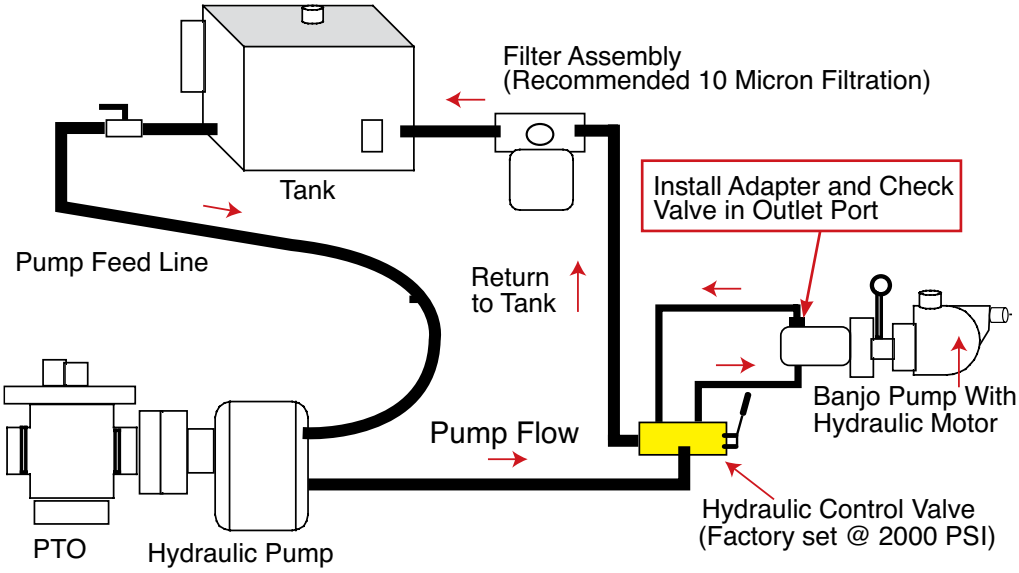

Recommendation:
We recommend using the motor spool control valve or a suitable equivalent. The lack of such a valve in this circuit may cause failure to the hydraulic motor.

| HYDRAULIC MOTOR SPOOL VALVE | | | |
|---|---|---|---|
| PART NO | DESCRIPTION | HP | QTY |
| HSV1000 | Hydraulic Motor Spool Valve | N/A | 1 |

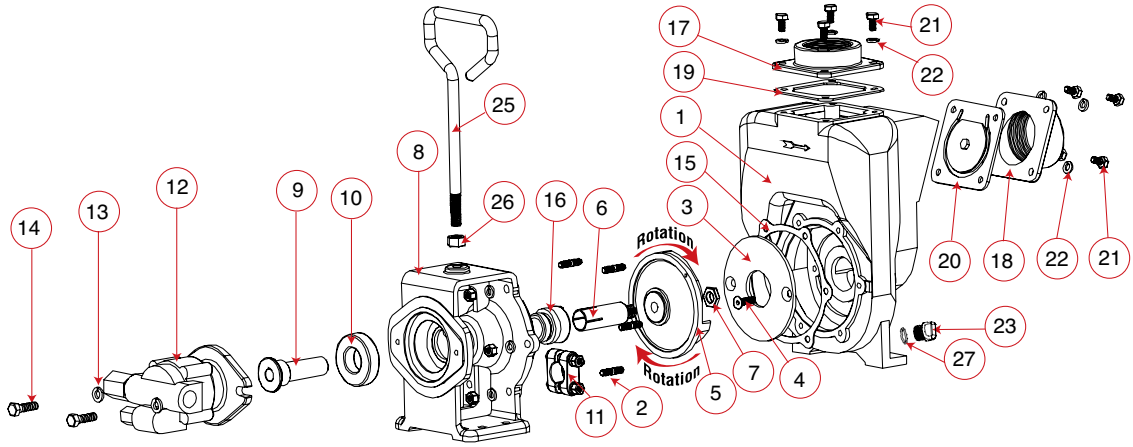


| HYDRAULIC MOTOR DATA | |
|---|---|
| U.S. Gallons/Rev. | 0.0025 |
| Cubic Inches/Rev. | 0.580 |
| Liters/Rev. | 0.0097 |
| Max Hydraulic Pressure | 2000 PSI |
| Min Hydraulic Pressure | 200 PSI |
| Inlet Port | SAE 10 (7/8-14 UNF-2B) |
| Outlet Port | SAE 10 (7/8-14 UNF-2B) |
| Minimum GPM Required | 6 GPM 2400 RPM |
| Maximum GPM Required | 10 GPM 4000 RPM |
| Ideal GPM Required | 9 GPM 3600 RPM |
| **CONNECTION INFORMATION** | |
| Inlet | "A" Port |
| Outlet | "B" Port |
| Supplied check valve is to ensure proper rotation of the Banjo pump. Place check valve in outlet port (marked "B") for proper right hand rotation. | |
| **SPOOL VALVE INFORMATION** | |
| Required Outlet Flow | Min 8 GPM / Max 13 GPM |
| Required System Pressure | Min 600 PSI / Max 3000 PSI |

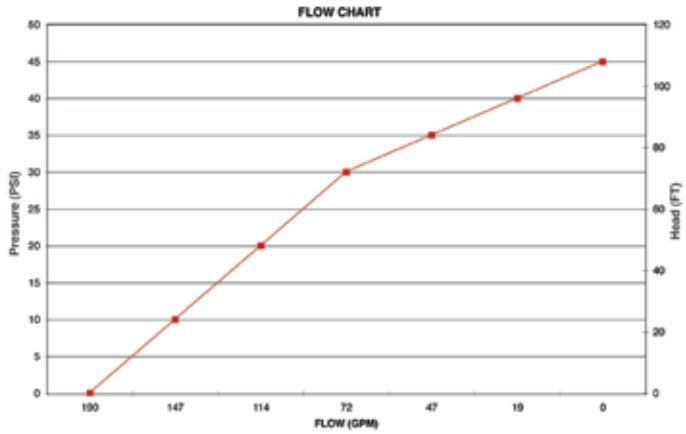


## REPLACEMENT PARTS 1½" & 2" HYDRAULIC ADAPTER

| ITEM | PART NO | DESCRIPTION | QTY |
|---|---|---|---|
| 1 | 17049A | Hydraulic Motor Adapter | 1 |
| 2 | 17018 | Gasket Adapter | 1 |
| 3 | 17035 | Seal Assembly | 1 |
| N/S | 17007 | 7/8" SS Shaft Sleeve | 1 |
| N/S | 12214A | Shim | 1 |
| 4 | 17056 | SKF 6206-2RS1 Bearing | 1 |
| 5 | 17055A | Hydraulic Adapter Shaft | 1 |
| 6 | HY1013 | Gresen® Hydraulic Motor | 1 |
| 7 | V20018 | Lock Washer | 2 |
| 8 | 18010SS | Bolt | 2 |
| 9 | 17600A | Hydraulic Motor Conversion Assembly | 1 |
| N/S | HY1003 | Seal Kit | 1 |

## REPLACEMENT PARTS 1½" & 2" CAST IRON PUMPS

| ITEM | PART NO | DESCRIPTION | QTY |
|---|---|---|---|
| 1 | 17026 | Pump Housing | 1 |
| 2 | 17042 | Pump Housing Stud | 6 |
| 3 | 17011 | Wear Plate | 1 |
| 4 | 17130 | 5/16-18 x 1.00" FHSCS, 18-8 SS | 2 |
| 5 | 17008 | 5" Impeller | 1 |
| 6 | 17007 | 7/8" Sleeve Drive for Hydraulic Motor | 1 |
| 7 | 17009B | 5/8" Impeller Nut | 1 |
| 8 | 17049A | Hydraulic Adapter | 1 |
| 9 | 17055A | Hydraulic Adapter Shaft | 1 |
| 10 | 17056 | SKF 6206-2RS1 Bearing | 1 |
| 11 | 17024 | 7/8" Clamp, no key | 1 |
| 12 | HY1013 | MGG@0025BC1D3 Hydraulic Motor Assembly | 1 |
| 13 | V20018 | 3/8" Lock Washer | 2 |
| 14 | 18010SS | 3/8"-16 x 1.25" HHHCS | 2 |
| 15 | 17018 | Gasket Adapter | 1 |
| 16 | 17028 | EPDM Seal Assembly | 1 |
| 16 | 17035 | FKM (viton type) Seal Assembly | 1 |
| 16 | 17035SD | Severe Duty Seal Assembly | 1 |
| 17 | 17000 | 2" Outlet Flange | 1 |
| 17 | 17001 | 1½" Outlet Flange | 1 |
| 18 | 17002 | 2" Inlet Flange | 1 |
| 18 | 17003 | 1½" Inlet Flange | 1 |
| 19 | 17013 | EPDM Gasket | 1 |
| 20 | 17016 | Gasket Check Valve Assembly | 1 |
| 21 | 17019 | 5/16" -18 x 0.75" Cap Screw | 8 |
| 22 | V10118 | 5/16" Split Lock Washer | 14 |
| 23 | 12777 | ½" Plug | 1 |
| 24 | V10119 | 5/16"-18 Hex Nut | 6 |
| 25 | 15022 | Handle | 1 |
| 26 | 17010 | ½" Hex Nut - 13UNF-RH | 1 |
| 27 | UV15163 | O-Ring | 1 |

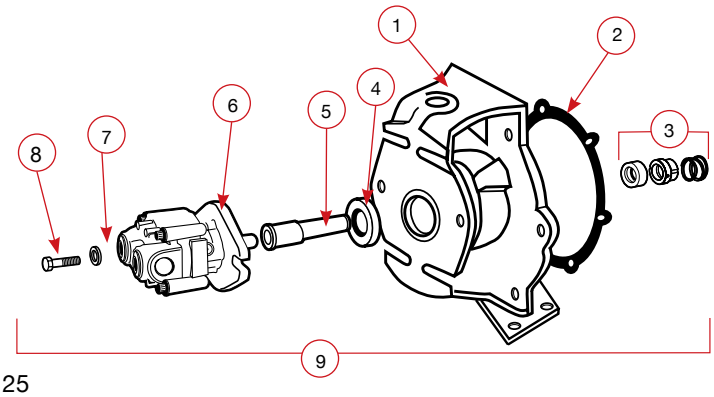

# 2" 222 Series Cast Iron Pumps

## PUMP FEATURES

- Cast iron construction for rugged dependable service.
- Carbon ceramic seal with stainless steel cup and spring with FKM (viton type) rubber.
- Replaceable inlet and outlet flanges.
- Dynamically balanced impeller.
- Pump end separated from engine.
- Heavy duty slinger seal on motor shaft.
- Large weep holes between pump end and engine.
- "V" Shaped for quicker priming.

**CAUTION-WARNING:** Please do not run pump dry, restrict or reduce port sizes, or dead head pump. This could cause component failure to pump.

**DO NOT USE WITH FLAMMABLE LIQUIDS.**

**NOTE:** Engine warranty service available at authorized Briggs & Stratton and Honda dealers.

***SHIPPING**: Truck shipments only.

| 222 SERIES CAST IRON PUMPS W/GAS ENGINES | | | |
|---|---|---|---|
| PART NO | DESCRIPTION | HP | QTY |
| 222PIH5 | 2" Cast Iron Pump w/5.5 HP Honda® Engine | 5.5 | 1 |
| 222PIH6 | 2" Cast Iron Pump w/6.5 HP Honda® Engine | 6.5 | 1 |
| 222PIH5E | 2" Cast Iron Pump w/5.5 HP Honda® Engine w/ Electric Start | 5.5 | 1 |
| 222PI6PRO | 2" Cast Iron Pump w/6.5 HP Briggs & Stratton® Engine Pro Series | 6.5 | 1 |

| 222 CAST IRON BEARING PEDESTAL FOR ELECTRIC MOTORS | | | |
|---|---|---|---|
| PART NO | DESCRIPTION | HP | QTY |
| 222PBI | 2" Cast Iron Bearing Pedestal w/ ¾" Shaft Straight Keyed | N/A | 1 |

* Recommended for use with 5 h.p. electric motor @ 3600 RPM.

| 222 CAST IRON PUMP ONLYS FOR GAS ENGINES | | | |
|---|---|---|---|
| PART NO | DESCRIPTION | HP | QTY |
| 222POI | 2" Cast Iron Pump Only w/ Full Impeller | N/A | 1 |
| 225POI | 2" Cast Iron Pump Only w/ Trimmed Impeller | N/A | 1 |

* 225POI Recommended for use with 10 pound per gallon material or more.

| 222 CAST IRON HYDRAULIC PUMPS | | | |
|---|---|---|---|
| PART NO | DESCRIPTION | HP | QTY |
| 222PIHY | 2" Cast Iron Pump w/12 HP Hydraulic Motor | 12 | 1 |

Please see page 124 for spool valve & diagram.

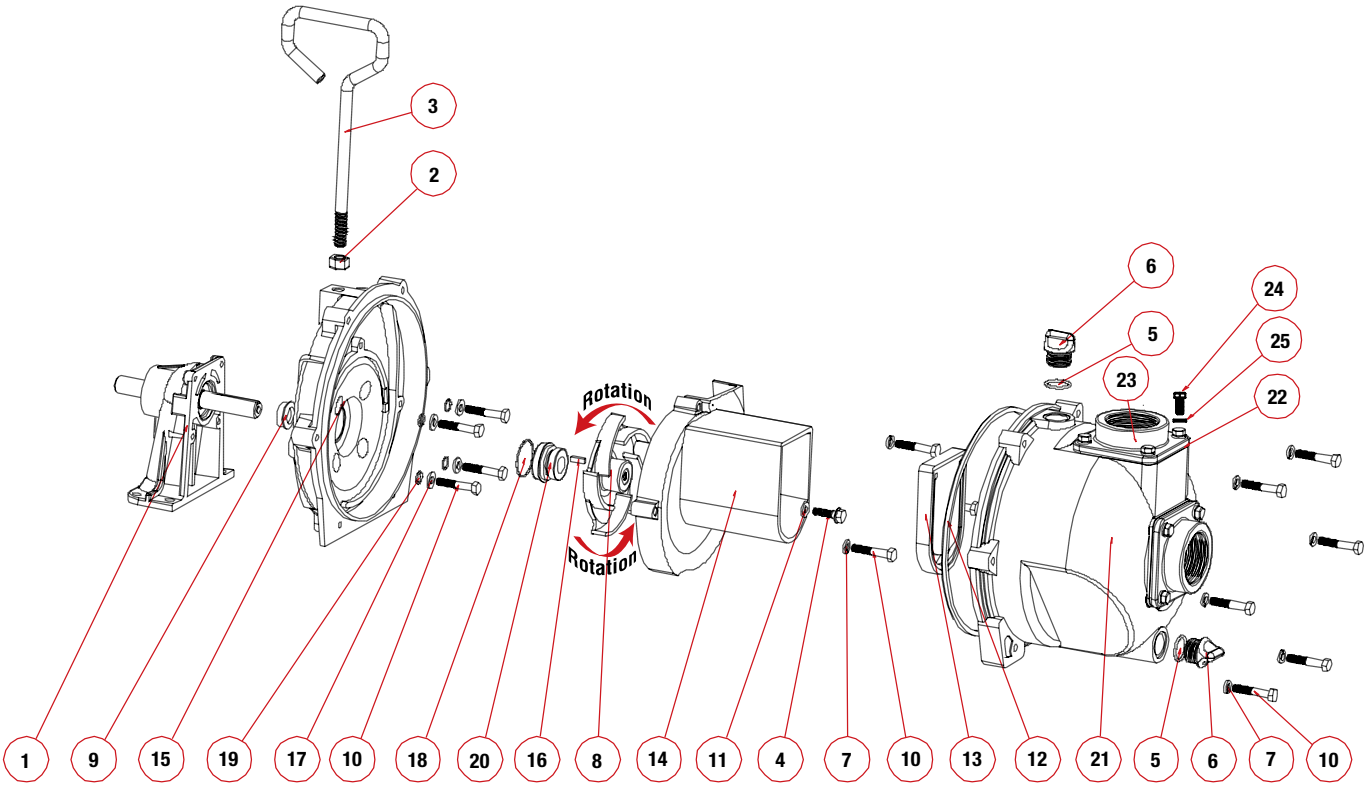


| REPLACEMENT PARTS 222 CAST IRON PUMPS W/GAS ENGINES | | | |
|---|---|---|---|
| ITEM | PART NO | DESCRIPTION | QTY |
| 1 | 12882A | Bearing Pedestal Assembly | 1 |
| 1 | 12600B | Hydraulic Pedestal Assembly | 1 |
| 2 | 17010 | ½" Jam Nut | 1 |
| 3 | 15022 | Handle | 1 |
| 4 | 12765A | 5⁄16" - 24 x 1.12 Impeller Bolt | 1 |
| 5 | 13778 | O-Ring | 2 |
| 6 | 13777 | ¾" Plug | 2 |
| 7 | V10118 | 5⁄16" Lock Washer | 9 |
| 8 | 15772 | 5 Vane Impeller | 1 |
| 9 | 12716 | Pump Slinger | 1 |
| 10 | 12715A | 5⁄16" - 24 x 1.75 HHCS | 13 |
| 11 | 12774VA | Impeller Bolt Gasket | 1 |
| 12 | 12719A | Body O-Ring | 1 |
| 13 | 12705 | Check Valve | 1 |
| 14 | 15702 | Volute | 1 |
| 15 | 15703 | Rear Bracket | 1 |
| 16 | 12902A | 3⁄16" sq x 5⁄8" Key | 1 |
| 17 | 12901 | 5⁄16" Flat Washer | 4 |
| 18 | 12710 | O-Ring | 1 |

| REPLACEMENT PARTS 222 CAST IRON PUMPS W/GAS ENGINES | | | |
|---|---|---|---|
| ITEM | PART NO | DESCRIPTION | QTY |
| 19 | 12717 | O-Ring | 4 |
| 20 | 12713V | Seal Assembly | 1 |
| 20 | 12713SD | Severe Duty Seal | 1 |
| 21 | 15712 | Body | 1 |
| 22 | 17013 | Flange Gasket | 2 |
| 23 | 17000 | Threaded Flange | 2 |
| 24 | 17019 | 5⁄16" - 18 x 0.75 HHCS | 8 |
| 25 | V10118 | 5⁄16" Lock Washer | 8 |
| N/S | 12099 | 7⁄16"-14 x 1.25" HHCS | 1 |
| N/S | 15751 | Bracket Shim | 1 |
| N/S | 15752 | Impeller Shim | 1 |
| N/S | 17033 | Z-Rails | 1pr |
| N/S | 17034 | 5⁄16" - 18 x 1¾" Zinc Plated | 4 |
| N/S | V10119 | 5⁄16" -18 Hex Nut | 4 |
| N/S | V10118 | 5⁄16" Lock Washer | 4 |
| N/S | 15000 | Repair Kit (Items 5, 8, 11-12, 18-20, 12099, 15751 & 15752) | 1 |
| N/S | 15000V | FKM (viton type) Repair Kit | 1 |
| N/S | 15999 | Seal Kit (Items 5, 11-12, 18-20, 12099, 15751 & 15752) | 1 |
| N/S | 15999V | FKM (viton type) Seal Kit | 1 |

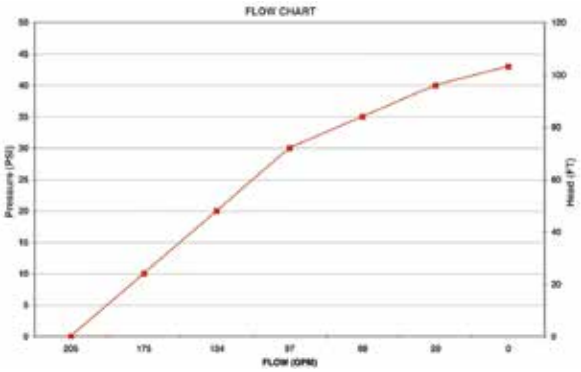


| KITS 222 CAST IRON PUMPS W/GAS ENGINES | | | | |
|---|---|---|---|---|
| PART NO | REPAIR KIT NO | FKM(viton type) REPAIR KIT NO | SEAL KIT EPDM NO | SEAL KIT FKM NO |
| 222PIH5 | 15000 | 15000V | 15999 | 15999V |
| 222PIH6 | 15000 | 15000V | 15999 | 15999V |
| 222PIH5E | 15000 | 15000V | 15999 | 15999V |
| 222PI6PRO | 15000 | 15000V | 15999 | 15999V |
| 222POI | 15000 | 15000V | 15999 | 15999V |
| 225POI | 15000 | 15000V | 15999 | 15999V |
| 222PBI | 15000 | 15000V | 15999 | 15999V |
| 222PIHY | 15000 | 15000V | 15999 | 15999V |

# 2" 222 Series Cast Iron Pumps with Electric Motors

## FEATURES

- Cast iron construction for rugged dependable service.
- Stainless steel shaft sleeve to protect engine shaft.
- Carbon ceramic seal with stainless steel cup and spring with FKM (viton type) rubber.
- Replaceable inlet and outlet flanges.
- Dynamically balanced impeller.
- Pump end separated from engine.
- Heavy duty slinger seal on motor shaft.
- Large weep holes between pump end and engine.
- "V" shaped for quicker priming.

**CAUTION-WARNING:** Please do not run pumps dry, restrict or reduce port sizes or dead head pumps. This could cause component failure to pump. No Flammables.

**DO NOT USE WITH FLAMMABLE LIQUIDS.**

***SHIPPING**: Truck shipments only.

| 222 SERIES CAST IRON PUMPS W/ELECTRIC MOTORS | | | |
|---|---|---|---|
| PART NO | DESCRIPTION | HP | QTY |
| 222PIE5 | 2" Cast Iron Pump w/5.0 HP Three Phase Electric Motor | 5.0 | 1 |
| 222PIE51 | 2" Cast Iron Pump w/5.0 HP Single Phase Electric Motor | 5.0 | 1 |

## COMPLETE PUMP WITH EFFICIENT INDUSTRIAL ELECTRIC MOTORS!

| POLYETHYLENE SUCTION BASKET STRAINER | | |
|---|---|---|
| PART NO | DESCRIPTION | QTY |
| 200SBS | 2" Female Thread Poly Basket | 1 |
| 300SBS | 3" Female Thread Poly Basket | 1 |

## MOTOR FEATURES:

- Pressure cast aluminum end plates with ribbed design for rigidity.
- Ball bearings, locked drive end bearing.
- Heavy gauge steel frame.
- Motors wound with inverter spike resistance magnet wire.
- Mounted complete on heavy duty cast iron base plate.
- 230 V Motors.

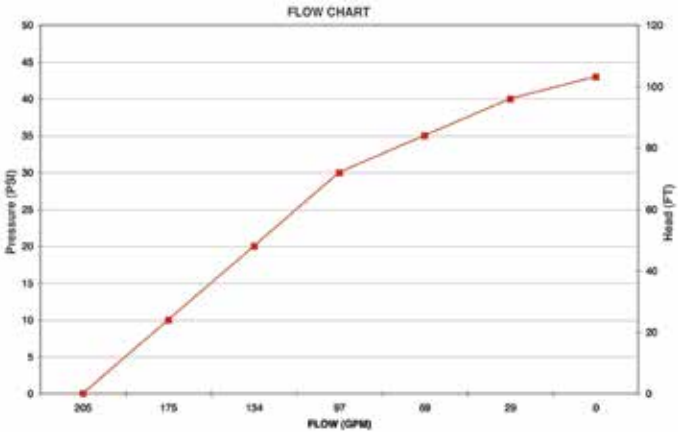

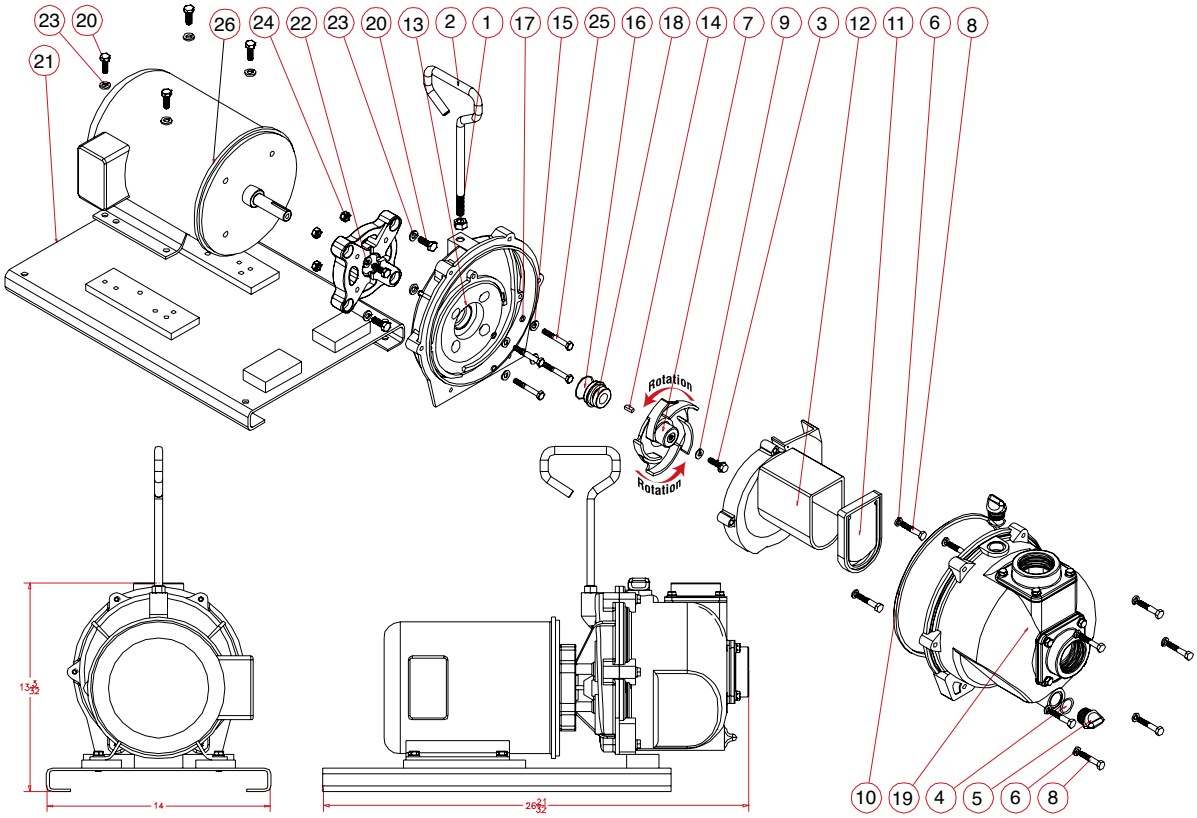


| REPLACEMENT PARTS 222 CAST IRON PUMPS W/ELECTRIC MOTORS | | | |
|---|---|---|---|
| ITEM | PART NO | DESCRIPTION | QTY |
| 1 | 17010 | ½" Jam Nut | 1 |
| 2 | 15022 | Handle | 1 |
| 6 | 12765A | 5/16" - 24 x 1.12 Impeller Bolt | 1 |
| 4 | 13778 | O-Ring | 2 |
| 5 | 13777 | ¾" Plug | 2 |
| 6 | V10118 | 5/16" Lock Washer | 9 |
| 7 | 15772 | 5 Vane Impeller | 1 |
| 8 | 12715A | 5/16" - 24 x 1.75 HHCS | 13 |
| 9 | 12774VA | Impeller Bolt Gasket | 1 |
| 10 | 12719A | Body O-Ring | 1 |
| 11 | 12705 | Check Valve | 1 |
| 12 | 15702 | Volute | 1 |
| 13 | 15703 | Rear Bracket | 1 |
| 14 | 12902A | 3/16" SQ. x 5/8" Key | 1 |
| 15 | 12901 | 5/16" Flat Washer | 4 |
| 16 | 12710 | O-Ring | 1 |
| 17 | 12717 | O-Ring | 4 |
| 18 | 12713V | Seal Assembly | 1 |

| REPLACEMENT PARTS 222 CAST IRON PUMPS W/ELECTRIC MOTORS | | | |
|---|---|---|---|
| ITEM | PART NO | DESCRIPTION | QTY |
| 18 | 12713SD | Severe Duty Seal | 1 |
| 19 | 15712 | Body | 1 |
| 20 | 17704 | 3/16" - 16 x 1.25 HHCS Bolt | 8 |
| 21 | 17701 | C-Faced Base Plate | 1 |
| 22 | 12046 | 56C Adapter | 1 |
| 23 | V20018 | 3/8" Lock Washer | 8 |
| 24 | V20019 | 3/8" 16 SS Hex Nut | 4 |
| 25 | BF107 | 5/16" - 18 x 2¼" HHCS Bolt | 4 |
| 26 | BEM5-182CZ | 5 HP 3450 RPM Three Phase Motor | 1 |
| 26 | BEM51-182CZ | 5 HP 3450 RPM Single Phase Motor | 1 |
| N/S | 12099 | 7/16"-14 x 1.25" HHCS | 1 |
| N/S | 15751 | Bracket Shim | 1 |
| N/S | 15752 | Impeller Shim | 1 |
| N/S | 12756 | Adapter Kit (Items 14, 20, 22, 23, 12052, 12053, 15751, 15752, 17029) | 1 |
| N/S | 15000 | Repair Kit (Items 4,7,9-11,14,16-18,12099,15751&15752) | 1 |
| N/S | 15000V | FKM (viton type) Repair Kit | 1 |
| N/S | 15999 | Seal Kit (Items 4, 9-11, 14,16-18,12099,15751&15752) | 1 |
| N/S | 15999V | FKM (viton type) Seal Kit | 1 |

| KITS 222 CAST IRON PUMPS W/ELECTRIC MOTORS | | | | |
|---|---|---|---|---|
| PART NO | EPDM REPAIR KIT NO | FKM(viton type) REPAIR KIT NO | EPDM SEAL KIT NO | ADAPTER KIT |
| 222PIE5 | 15000 | 15000V | 15999 | 12756 |
| 222PIE51 | 15000 | 15000V | 15999 | 12756 |

# 2" M222 Series Cast Iron Manifold Wet Seal Pumps

## FEATURES

- Durable cast iron construction.
- Dynamically balanced impeller.
- Carbon ceramic seal with stainless steel cup and spring with FKM (viton type) rubber.
- Pump end separated from engine.
- Large weep holes between pump end and engine or motor.
- "V" Shaped for quicker priming.

**DO NOT USE WITH FLAMMABLE LIQUIDS.**

**NOTE:** Engine warranty service available at authorized Briggs & Stratton and Honda dealers.

***SHIPPING**: Truck shipments only.

| 2" MANIFOLD WET SEAL CI PUMPS W/GAS ENGINES | | | |
|---|---|---|---|
| PART NO | DESCRIPTION | HP | QTY |
| M222PIH6W | 2" Manifold Cast Iron Wet Seal Pump w/ 6.5 HP Honda® Engine | 6.5 | 1 |

| 2" MANIFOLD WET SEAL CI PUMPS W/ELECTRIC MOTORS | | | |
|---|---|---|---|
| PART NO | DESCRIPTION | HP | QTY |
| M222PIE5W | 2" Manifold Cast Iron Wet Seal Pump w/5 HP Three Phase Electric Motor | 5 | 1 |
| M222PIE51W | 2" Manifold Cast Iron Wet Seal Pump w/ 5 HP Single Phase Electric Motor | 5 | 1 |

| 2" MANIFOLD WET SEAL CI PUMPS W/BEARING PEDESTAL | | | |
|---|---|---|---|
| PART NO | DESCRIPTION | HP | QTY |
| M222PBIW | 2" Manifold Cast Iron Wet Seal Pump w/Bearing Pedestal w/ ¾ Shaft | N/A | 1 |

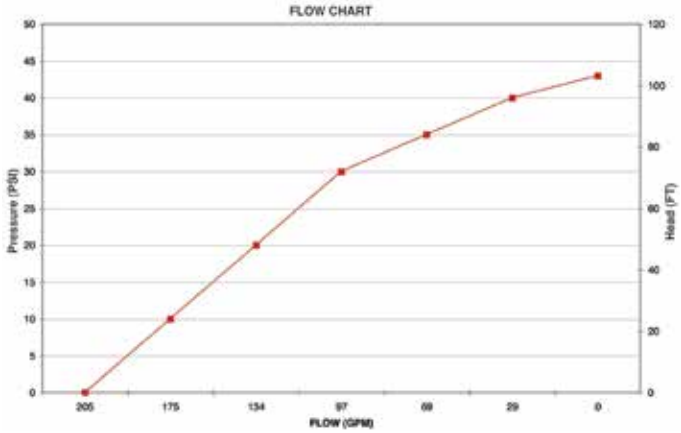

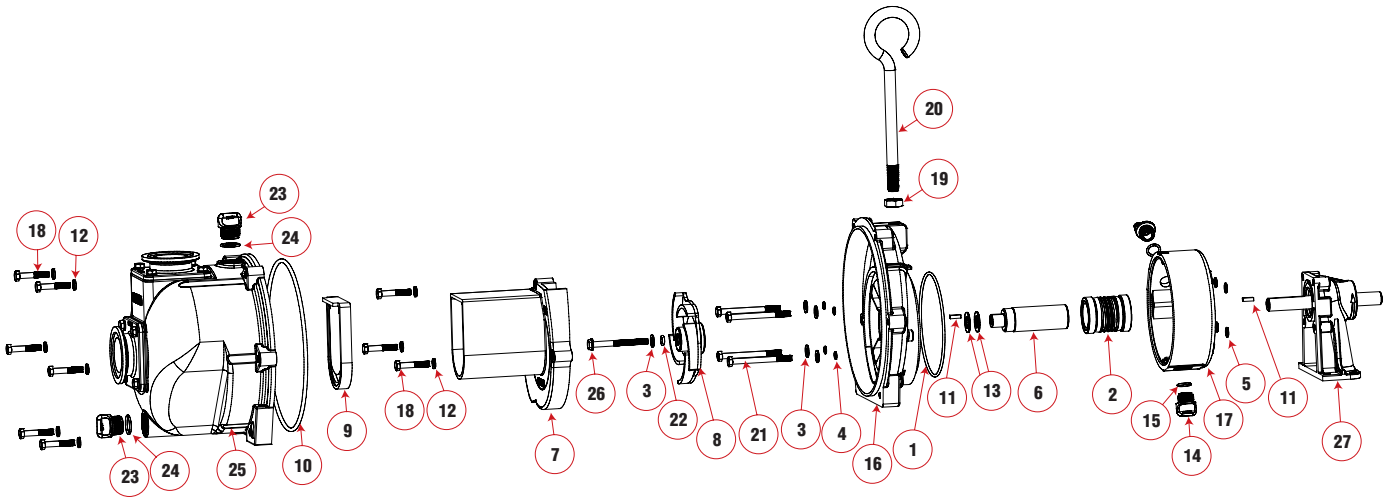


| REPLACEMENT PARTS M222 WET SEAL CAST IRON PUMPS | | | |
|---|---|---|---|
| ITEM | PART NO | DESCRIPTION | QTY |
| 1 | 13719 | O-Ring | 1 |
| 2 | 15035E | EPDM Mechanical Seal Assembly | 1 |
| 3 | 12901 | 5/16" Flat Washer | 4 |
| 4 | 12717 | O-Ring for Bracket Screw | 4 |
| 5 | 12709 | O-Ring | 4 |
| 6 | 15055 | Adapter Shaft | 1 |
| 7 | 15702 | Volute | 1 |
| 8 | 15772 | 5 Vane Impeller | 1 |
| 9 | 12705 | Check Valve | 1 |
| 10 | 12719A | Body O-Ring | 1 |
| 11 | 12902A | Impeller Key | 2 |
| 12 | V10118 | 5/16" Lock Washer | 9 |
| 13 | CV10175 | Gasket | 2 |
| 14 | 12777 | ½" Plug | 2 |

| REPLACEMENT PARTS M222 WET SEAL CAST IRON PUMPS | | | |
|---|---|---|---|
| ITEM | PART NO | DESCRIPTION | QTY |
| 15 | UV15163 | O-Ring | 2 |
| 16 | 15703W | Rear Bracket | 1 |
| 17 | 15201W | Wet Seal Reservoir | 1 |
| 18 | 12715A | 5/16"- 24 x 1¾" HHCS | 9 |
| 19 | 18034 | 5/8"-11 Jam Nut | 1 |
| 20 | 18033 | Pump Handle | 1 |
| 21 | V10117 | 5/16" - 18 x 3½" HFS | 4 |
| 22 | A203V | O-Ring | 1 |
| 23 | 13777 | ¾" Plug | 2 |
| 24 | 13778 | O-Ring | 2 |
| 25 | M15712 | Pump Body | 1 |
| 26 | 12766 | 5/16" - 24 x 3¼" HFS | 1 |
| 27 | 12882A | Bearing Pedestal | 1 |

# 2" M222 Series Cast Iron Manifold Wet Seal Pumps with Hydraulic Motors

## FEATURES

- Durable cast iron construction.
- Dynamically balanced impeller.
- Carbon ceramic seal with stainless steel cup and spring with FKM (viton type) rubber.
- Pump end separated from engine.
- Large weep holes between pump end and motor.
- "V" Shaped for quicker priming.

DO NOT USE WITH FLAMMABLE LIQUIDS.

| 2" MANIFOLD WET SEAL CI HYDRAULIC PUMP | | | |
|---|---|---|---|
| PART NO | DESCRIPTION | HP | QTY |
| M222PIHYW | 2" Manifold Cast Iron Wet Seal Pump w/12 HP Hydraulic Motor | 12 | 1 |

## SPOOL VALVE ASSEMBLY DIAGRAM

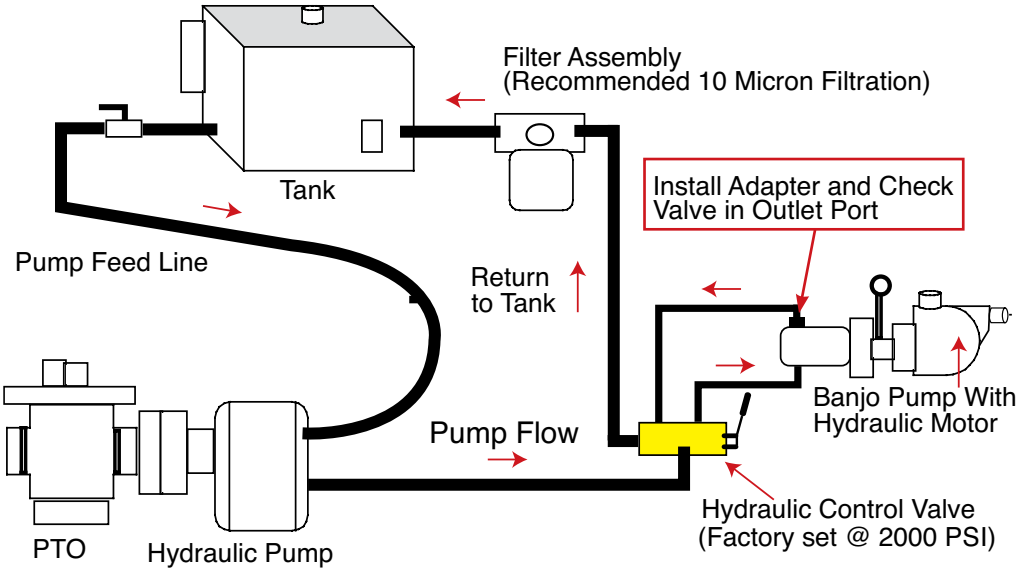

Recommendation:
We recommend using the motor spool control valve or a suitable equivalent. The lack of such a valve in this circuit may cause failure to the hydraulic motor.

| HYDRAULIC MOTOR SPOOL VALVE | | | |
|---|---|---|---|
| PART NO | DESCRIPTION | HP | QTY |
| HSV1000 | Hydraulic Motor Spool Valve | N/A | 1 |

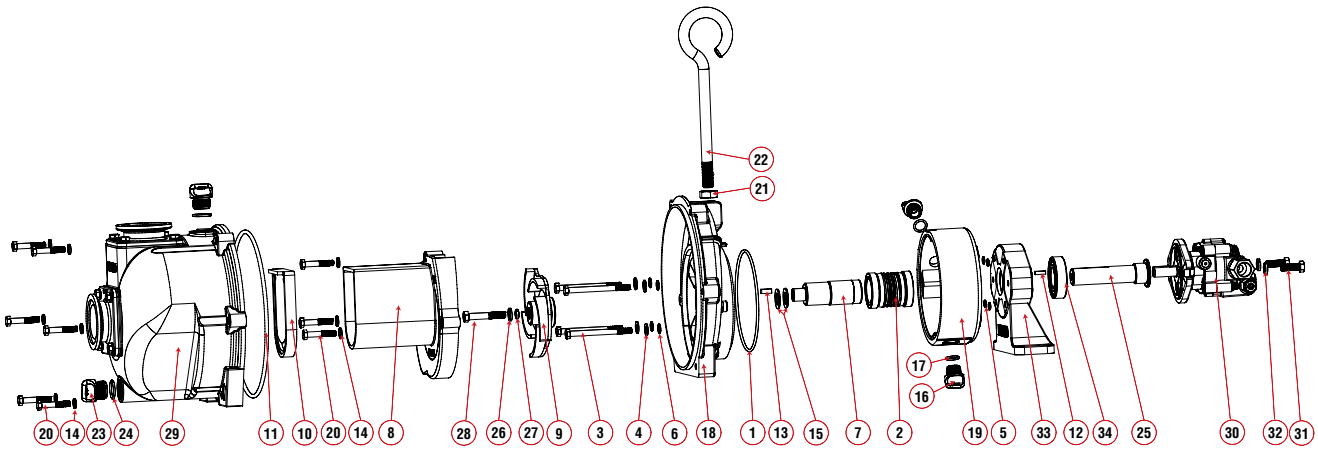


| HYDRAULIC MOTOR DATA | |
|---|---|
| U.S. Gallons/Rev. | 0.0025 |
| Cubic Inches/Rev. | 0.580 |
| Liters/Rev. | 0.0097 |
| Max Hydraulic Pressure | 2000 PSI |
| Min Hydraulic Pressure | 200 PSI |
| Inlet Port | SAE 10 (7/8-14 UNF-2B) |
| Outlet Port | SAE 10 (7/8-14 UNF-2B) |
| Minimum GPM Required | 6 GPM 2400 RPM |
| Maximum GPM Required | 10 GPM 4000 RPM |
| Ideal GPM Required | 9 GPM 3600 RPM |
| **CONNECTION INFORMATION** | |
| Inlet | "A" Port |
| Outlet | "B" Port |
| Supplied check valve is to ensure proper rotation of the Banjo pump. Place check valve in outlet port (marked "B") for proper right hand rotation. | |
| **SPOOL VALVE INFORMATION** | |
| Required Outlet Flow | Min 8 GPM / Max 13 GPM |
| Required System Pressure | Min 600 PSI / Max 3000 PSI |

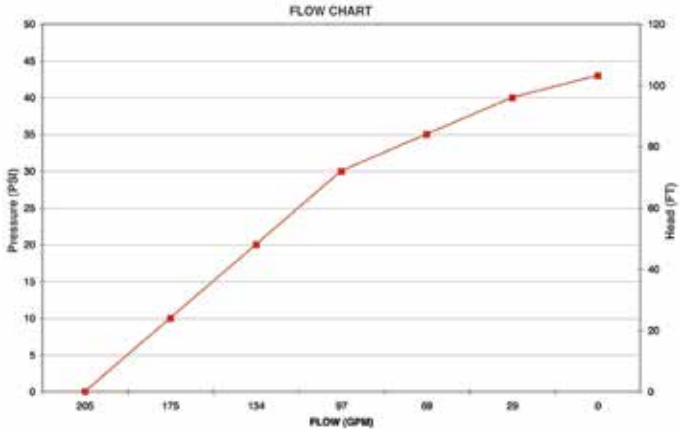


## REPLACEMENT PARTS M222 WET SEAL HYRAULIC PUMP

| ITEM | PART NO | DESCRIPTION | QTY |
|---|---|---|---|
| 1 | 13719 | O-Ring | 1 |
| 2 | 15035E | EPDM Mechanical Seal Assembly | 1 |
| 3 | 13034 | 5/16" -24 x 3 3/4" HHCS | 4 |
| 4 | 12901 | SS Rear Bracket Washer | 4 |
| 5 | 12717 | O-Ring for Screw Head | 4 |
| 6 | 12709 | O-Ring | 4 |
| 7 | 13055 | Adapter Shaft | 1 |
| 8 | 15702 | Volute | 1 |
| 9 | 15772 | 5 Vane Impeller | 1 |
| 10 | 12705 | Check Valve | 1 |
| 11 | 12719A | Body O-Ring | 1 |
| 12 | 12902A | Impeller Key | 1 |
| 13 | 16901 | 1/4" SQ. 3/4" Key Stock | 1 |
| 14 | V10118 | 5/16" SS Lock Washer | 9 |
| 15 | CV10175 | Gasket | 2 |
| 16 | 12777 | 1/2" Plug | 2 |
| 17 | UV15163 | Prime/Drain Plug O-Ring | 1 |
| 18 | 15703W | Rear Bracket | 1 |
| 19 | 15201W | Wet Seal Reservoir | 1 |
| 20 | 12715A | SS Bracket Screws | 9 |
| 21 | 18034 | 5/8" SS Jam Nut | 1 |
| 22 | 18033 | Handle | 1 |
| 23 | 13777 | 3/4" Plug | 2 |
| 24 | 13778 | O-Ring | 2 |
| 25 | 12055E | Hydraulic Motor Adapter Shaft | 1 |
| 26 | 19766 | 3/8" Flat Washer | 1 |
| 27 | A203V | O-Ring | 1 |
| 28 | BF207 | 3/8" - 16 x 2 1/4" HHCS | 1 |
| 29 | M15712 | Pump Body | 1 |
| 30 | HY1013 | Gresen® Hydraulic Motor | 1 |
| 31 | 18010SS | Bolt | 2 |
| 32 | V20018 | Lock Washer | 2 |
| 33 | 12049E | Hydraulic Pedestal Housing | 1 |
| 34 | 17056E | Bearing | 1 |

# 3" Cast Iron Pumps with Gas Engines

## FEATURES

- Cast iron construction for rugged dependable service.
- Stainless steel shaft sleeve to protect engine shaft.
- Carbon ceramic seal with stainless steel cup and spring with FKM (viton type) rubber.
- Replaceable inlet and outlet flanges.
- Dynamically balanced impeller.

**CAUTION-WARNING:** Please do not run pumps dry, restrict or reduce port sizes or dead head pumps. This could cause component failure to pump.

**DO NOT USE WITH FLAMMABLE LIQUIDS.**

**NOTE:** Engine warranty service available at authorized Briggs & Stratton and Honda dealers.

***SHIPPING**: Truck shipments only.

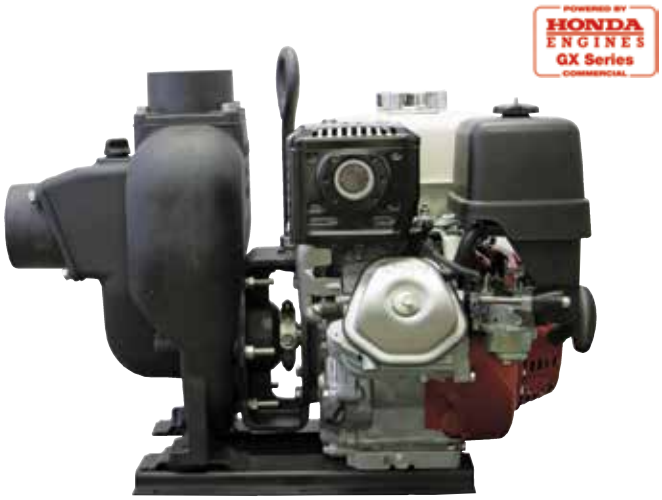


| 3" CAST IRON PUMPS W/GAS ENGINES | | | |
|---|---|---|---|
| PART NO | DESCRIPTION | HP | QTY |
| 300PIH-8 | 3" Cast Iron Pump w/8 HP Honda® Engine w/Electric Start & Pull Rope | 8 | 1 |
| 300PIH-11 | 3" Cast Iron Pump w/11 HP Honda® Engine w/Electric Start & Pull Rope | 11 | 1 |
| 300PIH13 | 3" Cast Iron Pump w/13 HP Honda® Engine w/Electric Start & Pull Rope | 13 | 1 |

| 3" CAST IRON PUMP ONLY | | | |
|---|---|---|---|
| PART NO | DESCRIPTION | HP | QTY |
| 300POI | 3" Cast Iron Pump Only for 1" Shaft | N/A | 1 |

| 3" CAST IRON BEARING PEDESTAL | | | |
|---|---|---|---|
| PART NO | DESCRIPTION | HP | QTY |
| 300PBI | 3" Cast Iron Bearing Pedestal w/1" Shaft | N/A | 1 |

Note: * Recommend: 7½ HP, 3450 RPM, 184TC Frame Size for close coupling to electric motors.

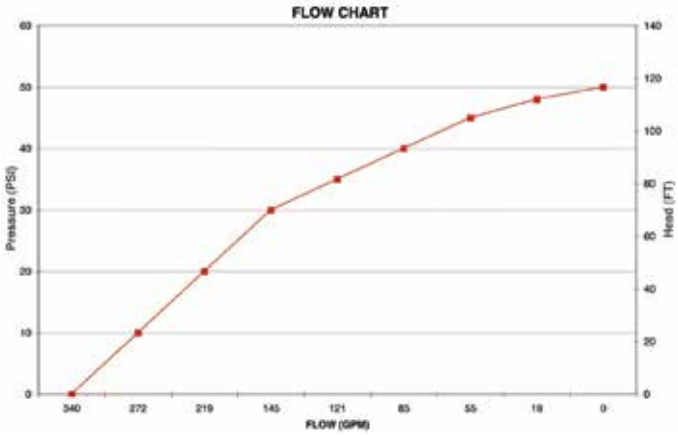

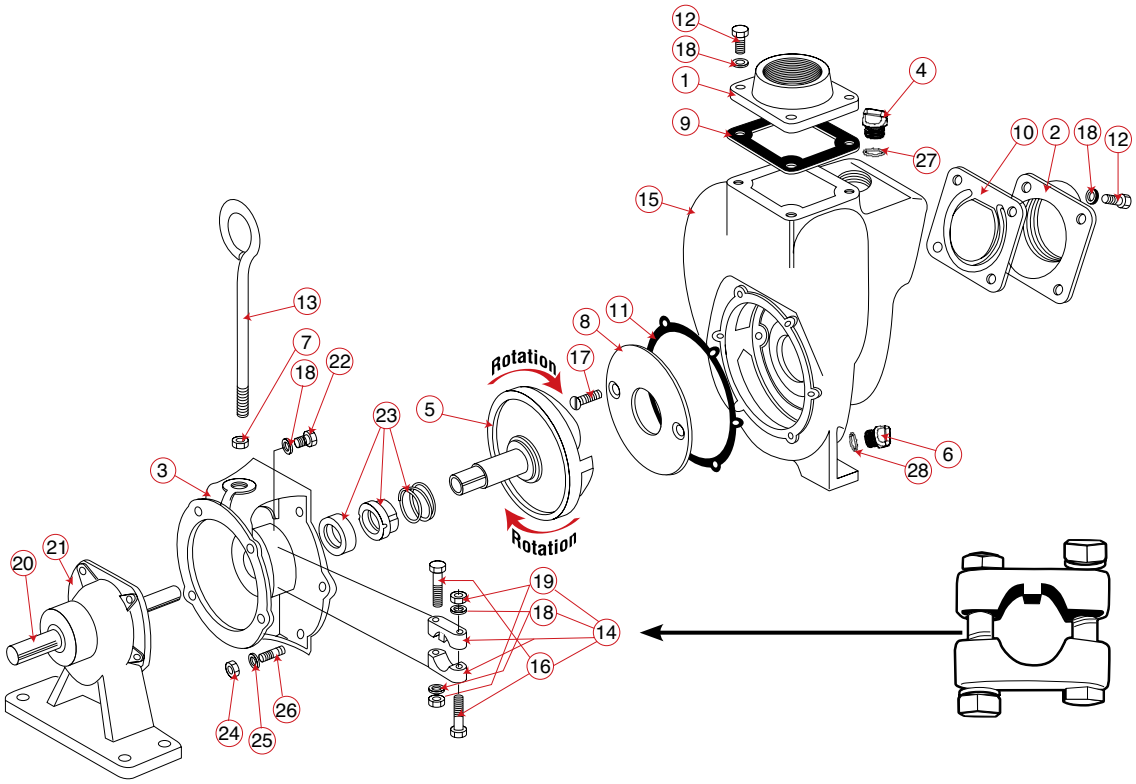


| REPLACEMENT PARTS 3" CAST IRON PUMPS | | | |
|---|---|---|---|
| ITEM | PART NO | DESCRIPTION | QTY |
| 1 | 18008 | NPT Outlet Flange | 1 |
| 1 | M18008 | 3" Manifold Outlet Flange | 1 |
| 2 | 18012 | NPT Inlet Flange | 1 |
| 2 | M18012 | 3" Manifold Inlet Flange | 1 |
| 3 | 18026 | Adapter for Gas Engine & Bearing Pedestal | 1 |
| 3 | 18048 | C-Flange Adapter | 1 |
| 3 | 18049 | Hydraulic Motor Adapter | 1 |
| N/S | 18055 | Hydraulic Adapter Shaft | 1 |
| 4 | 13777 | ¾" Plug | 1 |
| 5* | 18023 | 1" Impeller & Drive Shaft for Gas Engine | 1 |
| 5 | 18023-1.125 | 1⅛" Impeller & Drive Shaft for Electric Motor | 1 |
| 6 | 12777 | ½" Plug | 1 |
| 7 | 18034 | ⅝" SS Jam Nut | 1 |
| 8 | 18004 | Wear Plate | 1 |
| 9 | 18009 | EPDM Outlet Gasket | 1 |
| 10 | 18013 | Gasket Check Valve Assembly | 1 |
| 11 | 18021 | Adapter Gasket | 1 |
| 12 | 18010SS | ⅜" - 16 x 1⅛" SS Cap Screw HXHD | 8 |
| 13 | 18033 | Handle | 1 |

| REPLACEMENT PARTS 3" CAST IRON PUMPS | | | |
|---|---|---|---|
| ITEM | PART NO | DESCRIPTION | QTY |
| 14 | 18029 | Clamp Assembly (Old Style) | 1 |
| 14 | 18129 | Clamp Assembly (New Style) | 1 |
| 15 | 18001 | Pump Housing | 1 |
| 16 | 18030 | ⅜" -24 x 2¼" Bolt | 2 |
| 17 | 18106 | Wear Plate Flat Head Screw | 2 |
| 18 | V20018 | ⅜" Lock Washer | 8 |
| 19 | 18032 | ⅜" x 24 SS Hex Nut | 2 |
| 20 | 18504 | 1" Shaft | 1 |
| 21 | 18500 | Bearing Pedestal | 1 |
| N/S | 18502 | Bearing SKF 66306-2RS1/C3 | 2 |
| 22 | 17704 | Bolt | 4 |
| 23* | 18025 | FKM (viton type) Seal Assembly | 1 |
| 23 | 18025SD | Severe Duty Seal | 1 |
| 24 | V20019 | ⅜" 16 SS Hex Nut | 6 |
| 25 | V20018 | ⅜" SS Lock Washer | 6 |
| 26 | 18218 | ⅜" -16 x 24 x 2⅛" SS Stud | 6 |
| 27 | 13778 | O-Ring | 1 |
| 28 | UV15163 | O-Ring | 1 |
| N/S | 18035 | Z-Rail Mounting Bracket (Pair) | 1 |
| N/S | 18100 | Repair Kit (Consist of items 5*, 8,11,17, 23*) | 1 |

| UNIVERSAL BASE PLATE ASSEMBLY | | |
|---|---|---|
| PART NO | DESCRIPTION | QTY |
| 18700 | Base Plate Assembly for 1½", 2" & 3" Cast Iron or Poly Pump (Plate, Coupling Guard, Bolt Bag & Shims) | 1 |

| POLYETHYLENE SUCTION BASKET STRAINER | | |
|---|---|---|
| PART NO | DESCRIPTION | QTY |
| 200SBS | 2" Female Thread Poly Basket | 1 |
| 300SBS | 3" Female Thread Poly Basket | 1 |

# 3" Cast Iron Wet Seal Pumps

**FEATURES**

- New compact design!
- Run Dry Capability!
- Durable cast iron construction.
- Dynamically balanced impeller.
- Replaceable inlet & outlet flanges.
- Graphite loaded silicon carbide seal with stainless steel cup and spring with FKM (viton type) rubber.
- Pump end separated from engine.
- Double seal contained in ethylene glycol reservoir.
- 350 gallons per minute.
- 63 P.S.I. maximum pressure.

*Run Dry Capability!*

Seal reservoir
Double Seals!

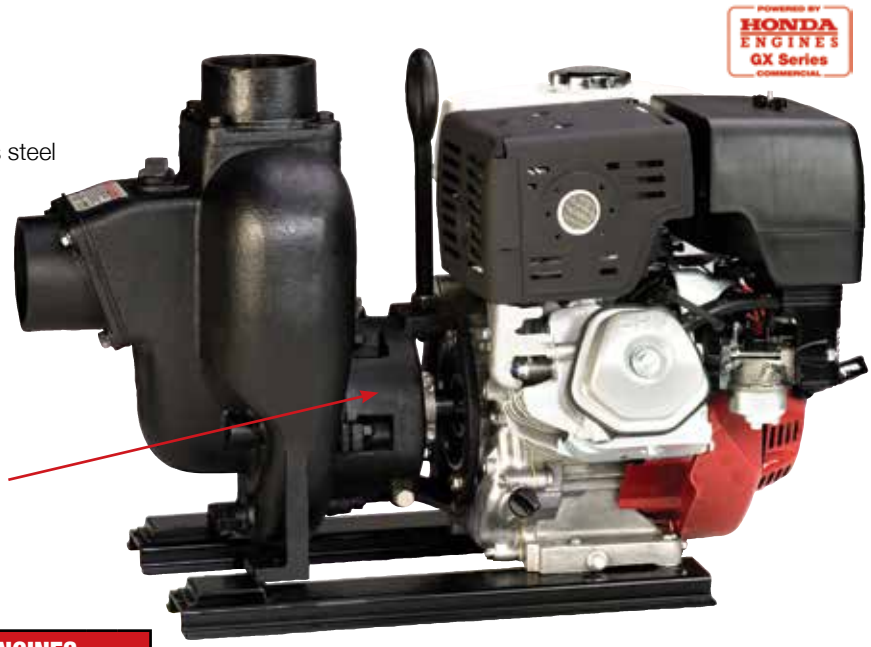


| 3" CAST IRON WET SEAL PUMPS W/GAS ENGINES | | | |
|---|---|---|---|
| PART NO | DESCRIPTION | HP | QTY |
| 301PIH13W | 3" Cast Iron Wet Seal Pump w/13 HP Honda® Engine w/ Electric Start & Pull Rope | 13 | 1 |

**DO NOT USE WITH FLAMMABLE LIQUIDS.**

**NOTE:** Engine warranty service available at authorized Briggs & Stratton® and Honda® dealers.

***SHIPPING:** Truck shipments only.

Bearing Pedestal
1" shaft for electric motors

Pump Only
for gas engine

| 3" CAST IRON WET SEAL BEARING PEDESTALS | | | |
|---|---|---|---|
| PART NO | DESCRIPTION | HP | QTY |
| 301PBIW | 3" Cast Iron Wet Seal Pump w/Bearing Pedestal | N/A | 1 |

| 3" CAST IRON WET SEAL PUMP ONLYS | | | |
|---|---|---|---|
| PART NO | DESCRIPTION | HP | QTY |
| 301POIW | 3" Cast Iron Wet Seal Pump Only | N/A | 1 |

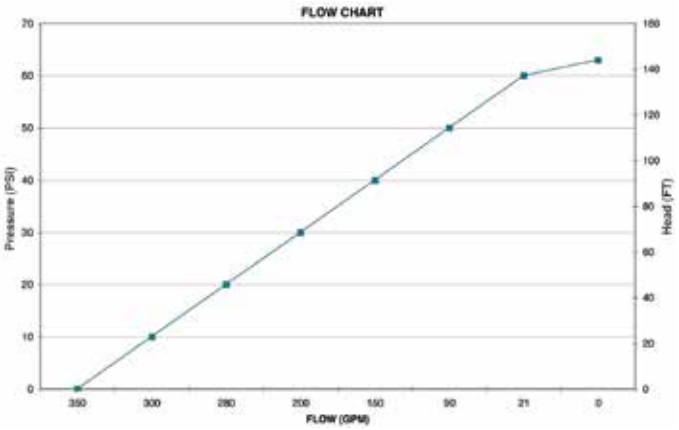

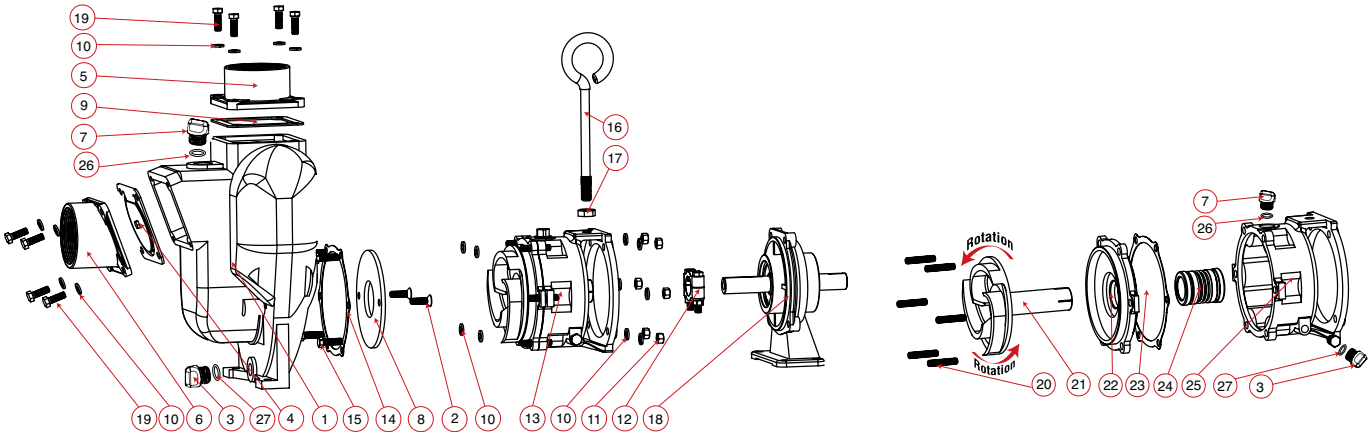


| REPLACEMENT PARTS 3" CAST IRON WET SEAL PUMPS | | | |
|---|---|---|---|
| ITEM | PART NO | DESCRIPTION | QTY |
| 1 | 18001 | Pump Housing | 1 |
| 2 | 18106 | Flat Head Socket Cap Screw | 2 |
| 3 | 12777 | ½" Plug | 2 |
| 4 | 18013 | Inlet/Check EPDM Gasket | 1 |
| 5 | 18008 | NPT Outlet Flange | 1 |
| 6 | 18012 | NPT Inlet Flange | 1 |
| 7 | 13777 | ¾" Plug | 2 |
| 8 | 18004 | Wear Plate | 1 |
| 9 | 18009 | EPDM Outlet Gasket | 1 |
| 10 | V20018 | ⅜" Lock Washer | 18 |
| 11 | V20019 | ⅜" 16 SS Hex Nut | 6 |
| 12 | 18129 | Clamp Assembly Keyed | 1 |
| 13 | 18200A | Wet Seal Assembly | 1 |
| 14 | 18021 | Adapter Gasket | 1 |

| REPLACEMENT PARTS 3" CAST IRON WET SEAL PUMPS | | | |
|---|---|---|---|
| ITEM | PART NO | DESCRIPTION | QTY |
| 15 | 17704 | ⅜" -16 x 1¼" HHCS | 4 |
| 16 | 18033 | Handle | 1 |
| 17 | 18034 | ⅝" -11 Jam Nut | 1 |
| 18 | 18500 | Bearing Pedestal | 1 |
| 19 | 18010SS | ⅜" - 16 x 1⅛" HHCS | 8 |
| 20 | 18218 | ⅜" -16 x 24 x 2⅛" SS Stud | 6 |
| 21 | 18206 | Impeller | 1 |
| 22 | 18202A | Cover Plate | 1 |
| 23 | 18021 | Adapter Gasket | 1 |
| 24 | 15035E | EPDM Mechanical Seal Assembly | 1 |
| 25 | 18203A | Wet Seal Reservoir | 1 |
| 26 | 13778 | O-Ring | 2 |
| 27 | UV15163 | O-Ring | 2 |

| POLYETHYLENE SUCTION BASKET STRAINER | | |
|---|---|---|
| PART NO | DESCRIPTION | QTY |
| 200SBS | 2" Female Thread Poly Basket | 1 |
| 300SBS | 3" Female Thread Poly Basket | 1 |

*See page 135 for available base plate.

# 3" Cast Iron Pumps with Hydraulic Motors

### PUMP FEATURES

- Rugged construction for dependable service.
- Carbon ceramic seal with stainless steel cup and spring with FKM (viton type) rubber.
- Replaceable inlet and outlet flanges.
- Dynamically balanced impeller.

### HYDRAULIC MOTOR

- Hydraulic fluid capacity
  Minimum 9 Gallons / Maximum 13 Gallons.
- 21 H.P. Motor.
- Open system.
- Minimum 600 P.S.I. / Maximum 3000 P.S.I.

**CAUTION-WARNING:** Please do not run pumps dry, restrict or reduce port sizes or dead head pumps. This could cause component failure to pump.

**DO NOT USE WITH FLAMMABLE LIQUIDS.**

| 3" CAST IRON HYDRAULIC PUMPS | | | |
|---|---|---|---|
| PART NO | DESCRIPTION | HP | QTY |
| 300PIHY | 3" Cast Iron Pump w/21 HP Hydraulic Motor | 21 | 1 |

## SPOOL VALVE ASSEMBLY DIAGRAM

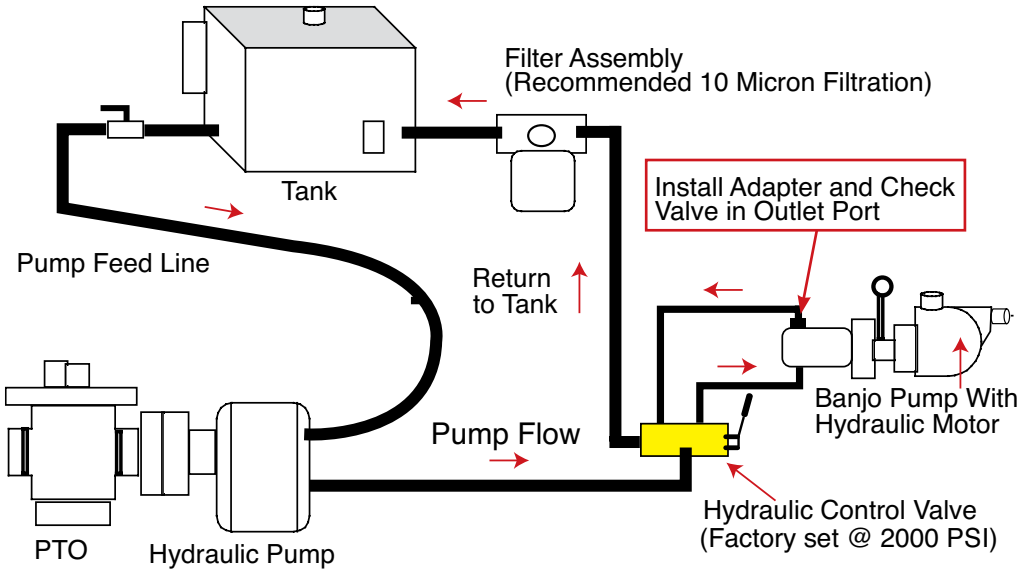

Recommendation:
We recommend using the motor spool control valve or a suitable equivalent. The lack of such a valve in this circuit may cause failure to the hydraulic motor.

| HYDRAULIC MOTOR SPOOL VALVE | | | |
|---|---|---|---|
| PART NO | DESCRIPTION | HP | QTY |
| HSV1000 | Hydraulic Motor Spool Valve | N/A | 1 |

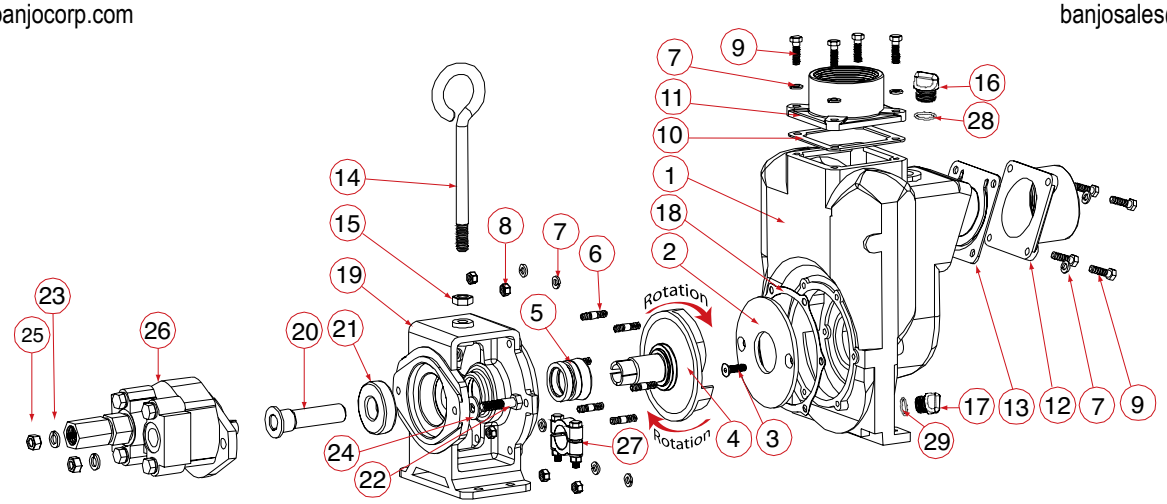


| HYDRAULIC MOTOR DATA | |
|---|---|
| U.S. Gallons/Rev. | 0.0038 |
| Cubic Inches/Rev. | 0.878 |
| Liters/Rev. | 0.0144 |
| Max Hydraulic Pressure | 3000 PSI |
| Min Hydraulic Pressure | 600 PSI |
| Inlet Port | 1-1/16-12UN-2B |
| Outlet Port | 1-5/16-12UN-2B |
| Minimum GPM Required | 9 GPM 2370 RPM |
| Maximum GPM Required | 13 GPM 3450 RPM |
| Ideal GPM Required | 9 GPM 3600 RPM |
| **CONNECTION INFORMATION** | |
| Inlet | "A" Port |
| Outlet | "B" Port |
| Supplied check valve is to ensure proper rotation of the Banjo pump. Place check valve in outlet port (marked "B") for proper right hand rotation. It is recommended that a minimum ¾" inlet line & a minimum 1" outlet line be used. The outlet port must be connected directly back to the hydraulic fluid reservoir & not to any valving, regulators or flow diverters. The outlet port/return line back pressure must not exceed 250 PSI. | |
| **SPOOL VALVE INFORMATION** | |
| Required Outlet Flow | Min 9 GPM / Max 13 GPM |
| Required System Pressure | Min 600 PSI / Max 3000 PSI |

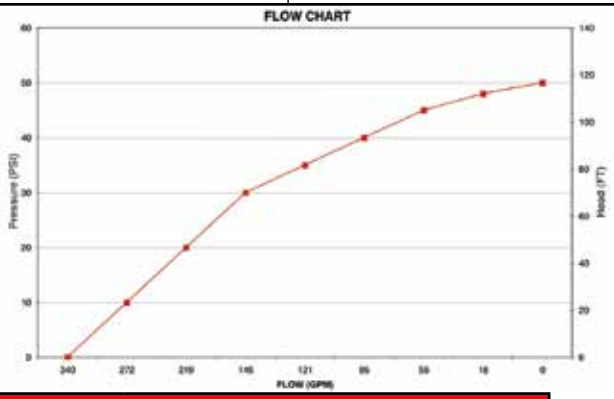


## REPLACEMENT PARTS 3" HYDRAULIC ADAPTER

| ITEM | PART NO | DESCRIPTION | QTY |
|---|---|---|---|
| 1 | 18049 | C-Flange Hydraulic Motor Adapter | 1 |
| 2 | 18021 | Gasket Adapter | 1 |
| 3 | 18025 | Seal Assembly | 1 |
| 4 | 18502 | SKF 63306-2RS1/C3 Bearing | 1 |
| 5 | 18055 | Hydraulic Adapter Shaft Sleeve | 1 |
| 6 | HY1012 | Tyrone® UM16 Hydraulic Motor | 1 |
| 7 | 18059 | ½" Flat Washer | 2 |
| 8 | 18058 | ½" Split Lock Washer | 2 |
| 9 | 18056 | ½" - 13" x 2" HHCS Bolt | 2 |
| 10 | 17010 | ½" Hex Nut | 2 |
| 11 | 18600 | Hydraulic Motor Adapter Assembly | 1 |
| N/S | HY1001 | Repair Kit | 1 |

## REPLACEMENT PARTS 3" CAST IRON HYDRAULIC PUMPS

| ITEM | PART NO | DESCRIPTION | QTY |
|---|---|---|---|
| 1 | 18001 | Pump Housing | 1 |
| 2 | 18004 | Wear Plate | 1 |
| 3 | 18106 | ⅜" - 16 x 1.25" HHCS | 2 |
| 4 | 18023 | Impeller & Drive Shaft | 1 |
| 5 | 18025 | FKM (viton type) Mechanical Seal | 1 |
| 5 | 18025SD | Severe Duty Seal | 1 |
| 6 | 18218 | ⅜" -16 x 24 x 2⅛" SS Stud | 6 |
| 7 | V20018 | ⅜" Lock Washer | 14 |
| 8 | V20019 | ⅜" 16 SS Hex Nut | 6 |
| 9 | 18010SS | ⅜" - 16 x 1.25" HHCS | 8 |
| 10 | 18009 | EPDM Outlet Gasket | 1 |
| 11 | 18008 | NPT Outlet Flange | 1 |
| 12 | 18012 | NPT Inlet Flange | 1 |
| 13 | 18013 | Inlet/Check EPDM Gasket | 1 |
| 14 | 18033 | Handle | 1 |
| 15 | 18034 | ⅝" -11 Hex Nut | 1 |
| 16 | 13777 | ¾" Plug | 1 |
| 17 | 12777 | ½" Plug | 1 |
| 18 | 18021 | Adapter Gasket | 1 |
| 19 | 18049 | Hydraulic Motor Adapter | 1 |
| 20 | 18055 | Hydraulic Adapter Shaft | 1 |
| 21 | 18502 | Bearing SKF 66306-2RS1/C3 | 1 |
| 22 | 18056 | ½" -13 x 2" HHCS | 2 |
| 23 | 18058 | ½" Split Washer | 2 |
| 24 | 18059 | ½" Flat Washer | 2 |
| 25 | 17010 | ½" - 13 Hex Nut | 2 |
| 26 | HY1012 | UM16-45A-HX Hydraulic Motor Assembly | 1 |
| 27 | 18029 | Clamp Assembly Unkeyed | 1 |
| 28 | 13778 | O-Ring | 1 |
| 29 | UV15163 | O-Ring | 1 |
| N/S | 18100 | Repair Kit (Consist of 2, 3, 4, 5, 18) | 1 |

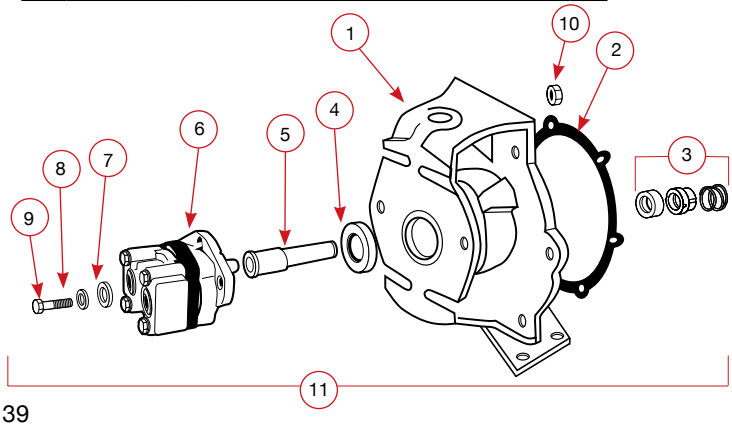

# 3" 333 Series Cast Iron Pumps

## FEATURES

- Durable cast iron construction.
- Dynamically balanced impeller.
- Replaceable inlet and outlet flanges.
- Graphite loaded silicon carbide sealwith stainless steel cup and spring with FKM (viton type) rubber.
- Pump end separated from engine.
- Large weep holes between pump end and engine.
- "V" Shaped for quicker priming.

**CAUTION-WARNING:** Please do not run pump dry, restrict or reduce port sizes, or dead head pump. This could cause component failure to pump.

**DO NOT USE WITH FLAMMABLE LIQUIDS.**

**NOTE:** Engine warranty service available at authorized Briggs & Stratton and Honda dealers.

***SHIPPING**: Truck shipments only.

333PIH13

| 333 SERIES CAST IRON PUMPS W/ELECTRIC MOTOR | | | |
|---|---|---|---|
| PART NO | DESCRIPTION | HP | QTY |
| 333PIE15 | 3" Cast Iron Pump w/15 HP Three Phase Electric Motor | 15 | 1 |

| 333 SERIES CAST IRON BEARING PEDESTAL | | | |
|---|---|---|---|
| PART NO | DESCRIPTION | HP | QTY |
| 333PBI | 3" Cast Iron Bearing Pedestal w/1" Shaft | N/A | 1 |

| 333 SERIES CAST IRON PUMPS W/GAS ENGINE | | | |
|---|---|---|---|
| PART NO | DESCRIPTION | HP | QTY |
| 333PIH13 | 3" Cast Iron Pump w/13 HP Honda® Engine w/ electric Start & Pull Rope | 13 | 1 |

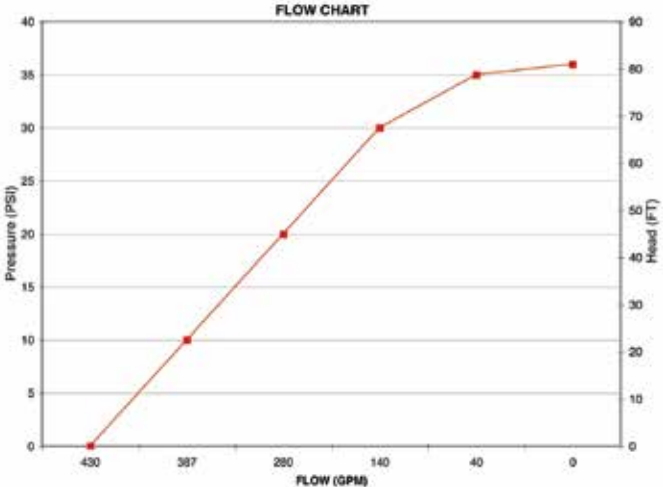


| 333 SERIES CAST IRON PUMP ONLY | | | |
|---|---|---|---|
| PART NO | DESCRIPTION | HP | QTY |
| 333POI | 3" Cast Iron Pump Only w/1" Shaft & 5 Vane Impeller Unassembled | N/A | 1 |
| 333POICF | 3" Cast Iron Pump Only w/1 3/8" Shaft & 5 Vane Impeller Unassembled for 215TC Frame | N/A | 1 |

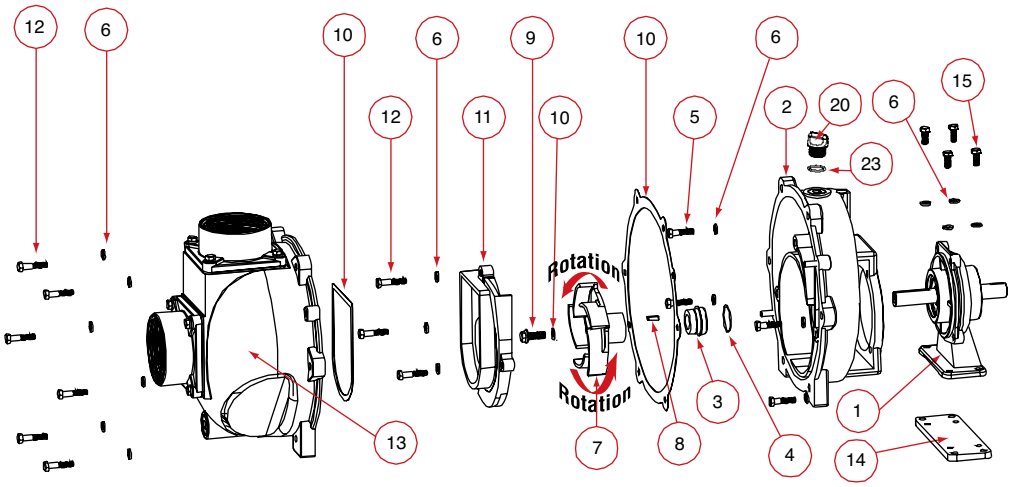


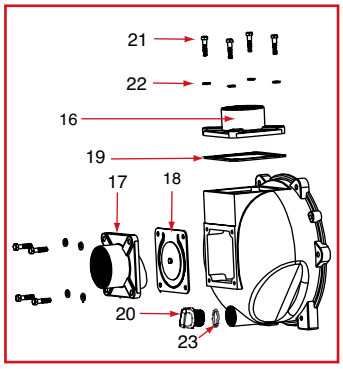


16733 Body Assembly

| REPLACEMENT PARTS 333PIH13 & 333PBI | | | |
|---|---|---|---|
| ITEM | PART NO | DESCRIPTION | QTY |
| N/S | 16099 | Impeller Removal Bolt | 1 |
| 1 | 18500 | Bearing Pedestal (333PBI) | 1 |
| 2 | 16704 | Rear Bracket | 1 |
| 3 | 16713 | Mechanical Seal | 1 |
| 4 | 16710 | O-Ring | 1 |
| 5 | 17704 | 3/8" - 16 x 1.25" SS Cap Screw (333PBI) | 4 |
| 6 | V20018 | 3/8" SS Lock Washer | 17 |
| 7 | 16773 | 3" Impeller (333PBI) | 1 |
| 7 | 16774 | 3" Impeller (333PIH13 & 333POI) | 1 |
| 8 | 16901 | 1/4" SQ. 3/4" Key Stock | 1 |
| 9 | 16765 | Impeller Bolt (333PBI) | 1 |
| 9 | 13765 | Impeller Bolt (333PPIH13) | 1 |
| 10 | 16019 | Gasket Set | 1 |
| 11 | 16702 | Volute | 1 |
| 12 | V20011SS | 3/8" - 16 x 1.75" SS Bolt | 9 |
| 13 | 16733 | Body | 1 |
| 14 | 18511 | Adapter Plate (333PBI) | 1 |
| 15 | 18512 | 3/8" - 16 x 0.875" SS HHCS (333PBI) | 4 |
| N/S | 16751 | Bracket Shim Set | 1 |
| N/S | 16752 | Impeller Shim | 1 |
| N/S | 18033 | Handle | 1 |
| N/S | 18034 | 5/8" SS Jam Nut | 1 |
| 16 | 16001 | Outlet Flange | 1 |
| 17 | 16003 | Inlet Flange | 1 |
| 18 | 16706 | FKM (viton type) Inlet Gasket w/ Check | 1 |
| 19 | 16011 | FKM (viton type) Outlet Gasket | 1 |
| 20 | 13777 | 3/4" Plug | 2 |
| 21 | 18027 | 3/8" - 16 x 1.50" HHCS (333PIH13) | 8 |
| 22 | V20018 | 3/8" SS Lock Washer | 8 |
| 23 | 13778 | O-Ring | 2 |

| REPLACEMENT PARTS 333PIE15 | | | |
|---|---|---|---|
| ITEM | PART NO | DESCRIPTION | QTY |
| N/S | 16099 | Impeller Removal Bolt | 1 |
| 2 | 16704A | Rear Bracket w/C-Face Adapter | 1 |
| 3 | 15025 | Mechanical Seal | 1 |
| 6 | V20018 | 3/8" SS Lock Washer | 8 |
| 7 | 16773A | 3" Impeller - 5 Vane | 1 |
| 8 | 17901 | 1/4" SQ. 3/4" Key Stock | 1 |
| 9 | 16765 | 7/16-20 1 1/4" HFS | 1 |
| 10 | 16019 | Gasket Set | 1 |
| 11 | 16702 | Volute | 1 |
| 12 | V20011SS | 3/8" - 16 x 1.75" SS Bolt | 9 |
| 13 | 16733 | Body | 1 |
| N/S | 16751 | Bracket Shim Set | 1 |
| N/S | 16752 | Impeller Shim | 1 |
| N/S | 18033 | Handle | 1 |
| N/S | 18034 | 5/8" SS Jam Nut | 1 |
| 16 | 16001 | Outlet Flange | 1 |
| 17 | 16003 | Inlet Flange | 1 |
| 18 | 16706 | FKM (viton type )Inlet Gasket w/ Check | 1 |
| 19 | 16011 | FKM (viton type) Outlet Gasket | 1 |
| 20 | 13777 | 3/4" Plug | 2 |
| 21 | 18027 | 3/8" - 16 x 1.50" HHCS | 8 |
| 22 | V20018 | 3/8" SS Lock Washer | 4 |
| 23 | 13778 | O-Ring | 2 |

# 3" M332 Series Cast Iron Manifold Wet Seal Pumps

## FEATURES

- Durable cast iron construction.
- Dynamically balanced impeller.
- Carbon ceramic seal with stainless steel cup and spring with FKM (viton type) rubber.
- Pump end separated from engine.
- Large weep holes between pump end and engine or motor.
- "V" Shaped for quicker priming.

**DO NOT USE WITH FLAMMABLE LIQUIDS.**

| 3" MANIFOLD WET SEAL CI PUMPS W/GAS ENGINES | | | |
|---|---|---|---|
| PART NO | DESCRIPTION | HP | QTY |
| M332PIH13W | 3" Manifold Cast Iron Wet Seal Pump w/13 HP Honda® Engine w/Electric Start & Pull Rope | 13 | 1 |

**NOTE:** Engine warranty service available at authorized Briggs & Stratton and Honda dealers.

***SHIPPING**: Truck shipments only.

| 3" MANIFOLD WET SEAL CI PUMPS W/ELECTRIC MOTORS | | | |
|---|---|---|---|
| PART NO | DESCRIPTION | HP | QTY |
| M332PIE10W | 3" Manifold Cast Iron Wet Seal Pump w/10HP Three Phase Electric Motor | 10 | 1 |
| M332PIE101W | 3" Manifold Cast Iron Wet Seal Pump w/10HP Single Phase Electric Motor | 10 | 1 |

| 3" MANIFOLD WET SEAL CAST IRON PUMP ONLY | | | |
|---|---|---|---|
| PART NO | DESCRIPTION | HP | QTY |
| M332POIW | 3" Manifold Cast Iron Wet Seal Pump Only | N/A | 1 |

| 3" MANIFOLD WET SEAL CAST IRON BEARING PEDESTAL | | | |
|---|---|---|---|
| PART NO | DESCRIPTION | HP | QTY |
| M332PBIW | 3" Manifold Cast Iron Wet Seal Bearing Pedestal w/ 1" Shaft | N/A | 1 |

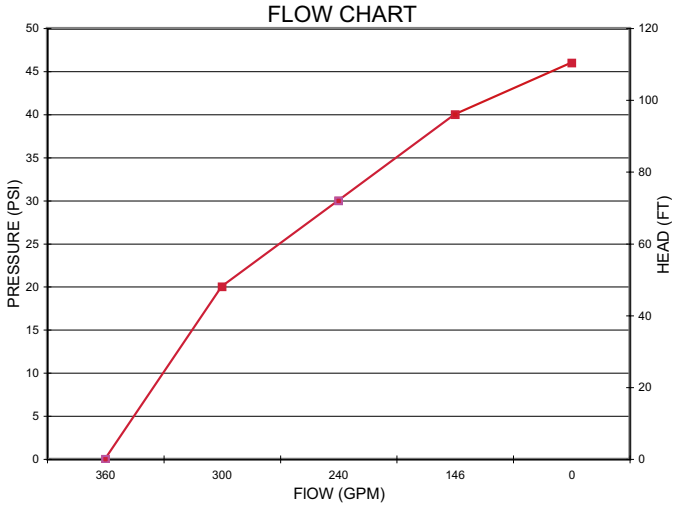

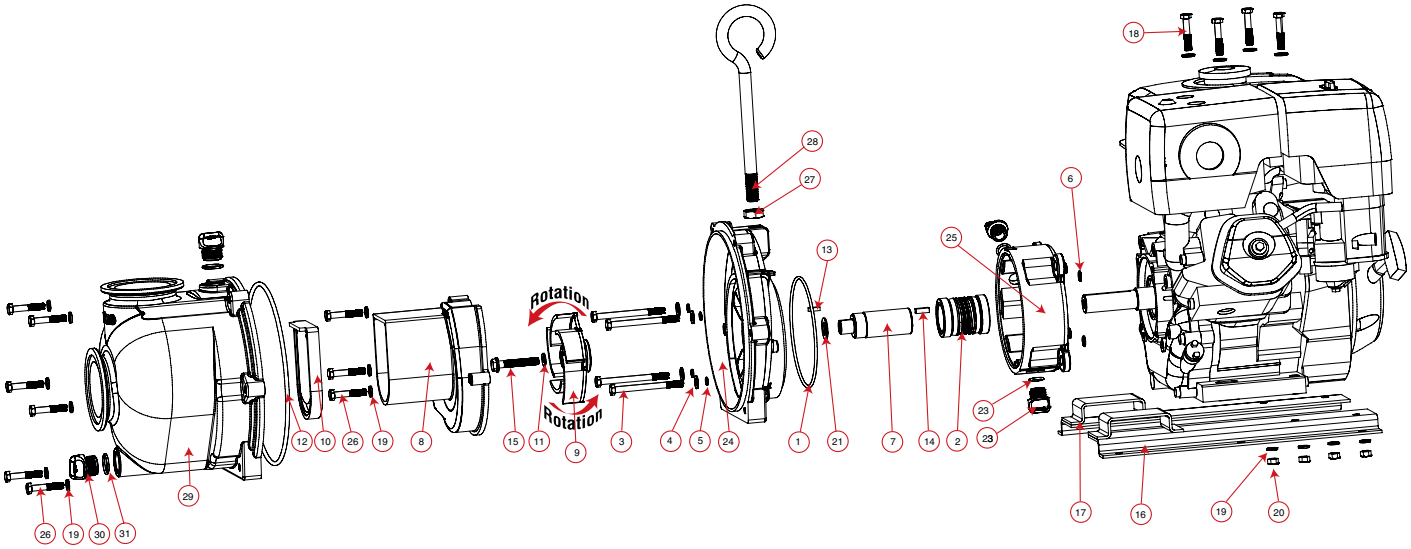


| REPLACEMENT PARTS M332 WET SEAL CAST IRON PUMPS | | | |
|---|---|---|---|
| ITEM | PART NO | DESCRIPTION | QTY |
| 1 | 13719 | O-Ring | 1 |
| 2 | 15035E | EPDM Mechanical Seal Assembly | 1 |
| 3 | 13034 | 5⁄16" - 24 x 3¾" HHCS | 4 |
| 4 | 12901 | 5⁄16" Flat Washer | 8 |
| 5 | 12717 | O-Ring for Bracket Screw | 4 |
| 6 | 12709 | O-Ring | 4 |
| 7 | 13055 | Adapter Shaft | 1 |
| 8 | 19702 | Volute | 1 |
| 9 | 19772 | 5 Vane Impeller | 1 |
| 10 | 12705 | Check Valve | 1 |
| 11 | 12774VA | Impeller Bolt Gasket | 1 |
| 12 | 12719A | Body O-Ring | 1 |
| 13 | 12902A | Impeller Key | 1 |
| 14 | 16901 | ¼" sq x ¾" Key Stock | 1 |
| 15 | 13766 | ⅜" - 24 x 2¼" HFS | 1 |

| REPLACEMENT PARTS M332 WET SEAL CAST IRON PUMPS | | | |
|---|---|---|---|
| ITEM | PART NO | DESCRIPTION | QTY |
| 16 | 18135B | Z-Rail | 1 |
| 17 | 18135A | Z-Rail | 1 |
| 18 | 17029 | 5⁄16" - 18 x 1¾" HHCS | 4 |
| 19 | V10118 | 5⁄16" Lock Washer | 13 |
| 20 | V10119 | 5⁄16" Hex Nut | 4 |
| 21 | CV10175 | Gasket | 2 |
| 22 | 12777 | ½" Plug | 2 |
| 23 | UV15163 | O-Ring | 2 |
| 24 | 19703W | Rear Bracket | 1 |
| 25 | 19201W | Wet Seal Reservoir | 1 |
| 26 | 12715A | 5⁄16"- 24 x 1¾" HHCS | 9 |
| 27 | 18034 | ⅝"-11 Jam Nut | 1 |
| 28 | 18033 | Pump Handle | 1 |
| 29 | M19712X | Pump Body | 1 |
| 30 | 13777 | ¾" Plug | 2 |
| 31 | 13778 | O-Ring | 2 |

# 3" M332 Series Cast Iron Manifold Wet Seal Pumps with Hydraulic Motors

## FEATURES

- Durable cast iron construction.
- Dynamically balanced impeller.
- Carbon ceramic seal with stainless steel cup and spring with FKM (viton type) rubber.
- Pump end separated from engine.
- Large weep holes between pump end and motor.
- "V" Shaped for quicker priming.

DO NOT USE WITH FLAMMABLE LIQUIDS.

| 3" MANIFOLD WET SEAL CI HYDRAULIC PUMP | | | |
|---|---|---|---|
| PART NO | DESCRIPTION | HP | QTY |
| M332PIHYW | 3" Manifold Cast Iron Wet Seal Pump w/21 HP Hydraulic Motor | 21 | 1 |

## SPOOL VALVE ASSEMBLY DIAGRAM

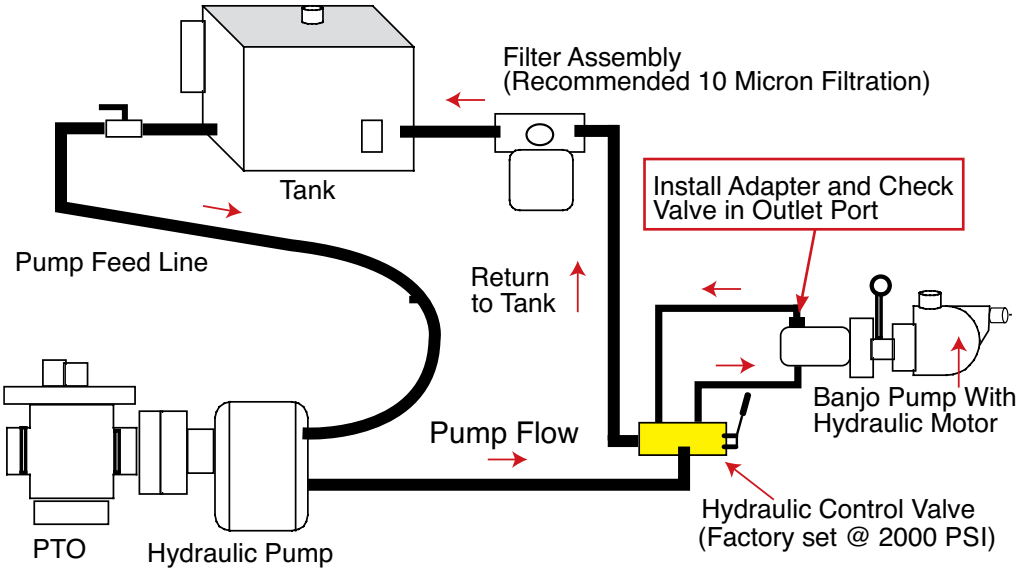

Recommendation:
We recommend using the motor spool control valve or a suitable equivalent. The lack of such a valve in this circuit may cause failure to the hydraulic motor.

| HYDRAULIC MOTOR SPOOL VALVE | | | |
|---|---|---|---|
| PART NO | DESCRIPTION | HP | QTY |
| HSV1000 | Hydraulic Motor Spool Valve | N/A | 1 |

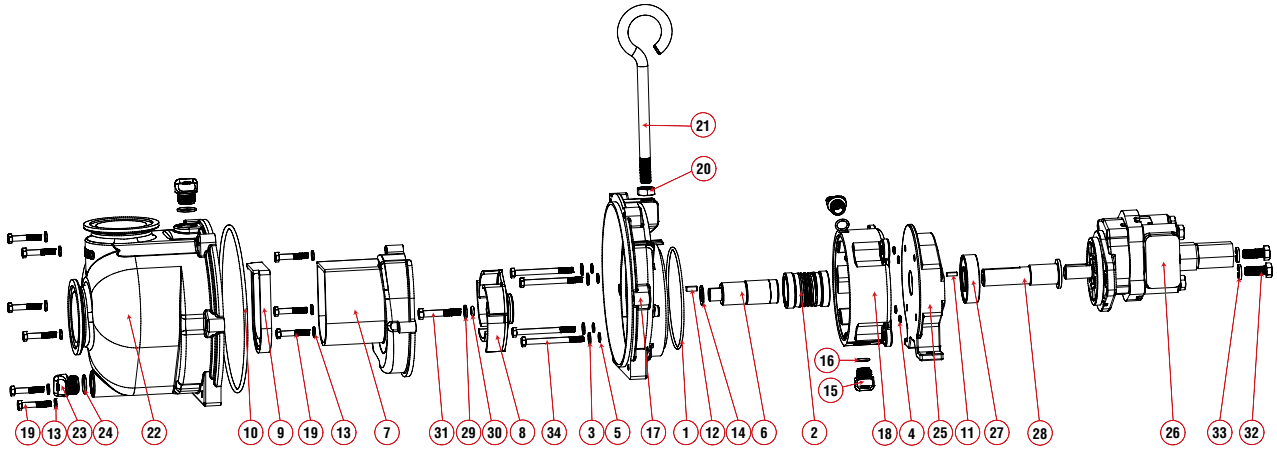


| HYDRAULIC MOTOR DATA | |
|---|---|
| U.S. Gallons/Rev. | 0.0038 |
| Cubic Inches/Rev. | 0.878 |
| Liters/Rev. | 0.0144 |
| Max Hydraulic Pressure | 3000 PSI |
| Min Hydraulic Pressure | 600 PSI |
| Inlet Port | 1-1/16-12UN-2B |
| Outlet Port | 1-5/16-12UN-2B |
| Minimum GPM Required | 9 GPM 2370 RPM |
| Maximum GPM Required | 13 GPM 3450 RPM |
| Ideal GPM Required | 9 GPM 3600 RPM |
| **CONNECTION INFORMATION** | |
| Inlet | "A" Port |
| Outlet | "B" Port |
| Supplied check valve is to ensure proper rotation of the Banjo pump. Place check valve in outlet port (marked "B") for proper right hand rotation. It is recommended that a minimum ¾" inlet line & a minimum 1" outlet line be used. The outlet port must be connected directly back to the hydraulic fluid reservoir & not to any valving, regulators or flow diverters. The outlet port/return line back pressure must not exceed 250 PSI. | |
| **SPOOL VALVE INFORMATION** | |
| Required Outlet Flow | Min 9 GPM / Max 13 GPM |
| Required System Pressure | Min 600 PSI / Max 3000 PSI |

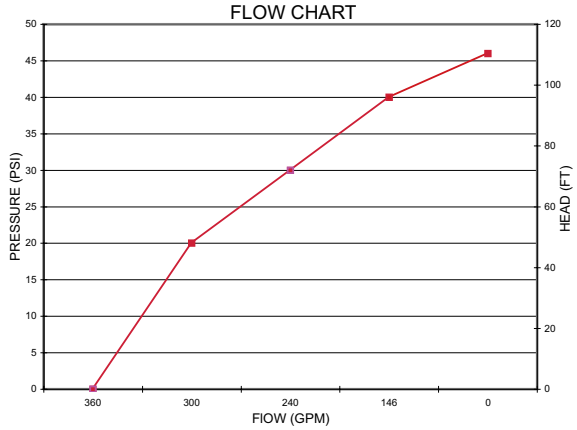


## REPLACEMENT PARTS M332 WET SEAL HYRAULIC PUMP

| ITEM | PART NO | DESCRIPTION | QTY |
|---|---|---|---|
| 1 | 13719 | O-Ring | 1 |
| 2 | 15035E | EPDM Mechanical Seal Assembly | 1 |
| 3 | 12901 | SS Rear Bracket Washer | 4 |
| 4 | 12717 | O-Ring for Screw Head | 4 |
| 5 | 12709 | O-Ring | 4 |
| 6 | 13055 | Adapter Shaft | 1 |
| 7 | 19702 | Volute | 1 |
| 8 | 19772 | 5 Vane Impeller | 1 |
| 9 | 12705 | Check Valve | 1 |
| 10 | 12719A | Body O-Ring | 1 |
| 11 | 12902A | Impeller Key | 1 |
| 12 | 16901 | ¼" SQ. ¾" Key Stock | 1 |
| 13 | V10118 | 5/16" SS Lock Washer | 9 |
| 14 | CV10175 | Gasket | 2 |
| 15 | 12777 | ½" Plug | 2 |
| 16 | UV15163 | Prime/Drain Plug O-Ring | 2 |
| 17 | 19703W | Rear Bracket | 1 |
| 18 | 19201W | Wet Seal Reservoir | 1 |
| 19 | 12715A | SS Bracket Screws | 9 |
| 20 | 18034 | 5/8" SS Jam Nut | 1 |
| 21 | 18033 | Handle | 1 |
| 22 | M19712X | Pump Body | 1 |
| 23 | 13777 | ¾" Plug | 2 |
| 24 | 13778 | O-Ring | 2 |
| 25 | 19001H | Reservoir Backing Plate | 1 |
| 26 | HY1012 | Tyrone® UM16 Hydraulic Motor | 1 |
| 27 | 18502 | SKF 63306-2RS1/C3 Bearing | 1 |
| 28 | 18055H | Hydraulic Motor Adapter Shaft | 1 |
| 29 | 19766 | 3/8" Flat Washer | 1 |
| 30 | A203V | O-Ring | 1 |
| 31 | BF207 | 3/8" - 16 x 2¼" HHCS | 1 |
| 32 | 17449 | Bolt | 2 |
| 33 | 18058 | ½" Split Lock Washer | 2 |
| 34 | V10117 | 5/16" x 3½" SS Body Bolt | 4 |

# 4" 444 Series Cast Iron Pumps

## FEATURES

- Durable cast iron construction.
- Dynamically balanced impeller.
- Replaceable inlet and outlet flanges.
- Graphite loaded silicon carbide seal with stainless steel cup and spring with FKM (viton type) rubber.
- Pump end separated from engine.
- Large weep holes between pump end and engine.
- "V" Shaped for quicker priming.

**CAUTION-WARNING:** Please do not run pump dry, restrict or reduce port sizes, or dead head pump. This could cause component failure to pump.

**DO NOT USE WITH FLAMMABLE LIQUIDS.**

**NOTE:** Engine warranty service available at authorized Briggs & Stratton and Honda dealers.

***SHIPPING**: Truck shipments only.

444PIH24

| 444 SERIES CAST IRON PUMPS W/GAS ENGINES | | | |
|---|---|---|---|
| PART NO | DESCRIPTION | HP | QTY |
| 444PIH24 | 4" Cast Iron Pump w/24 HP Honda® Engine | 24 | 1 |

| 444 SERIES CAST IRON PUMP ONLY | | | |
|---|---|---|---|
| PART NO | DESCRIPTION | HP | QTY |
| 444POI | 4" Cast Iron Pump Only w/ 1⅛" x 3½" Shaft & 6 Vane Impeller Unassembled | N/A | 1 |

**Graphite Loaded Silicon Carbide Seal for Longer Seal Life.**

Better Run Dry Capabilities!

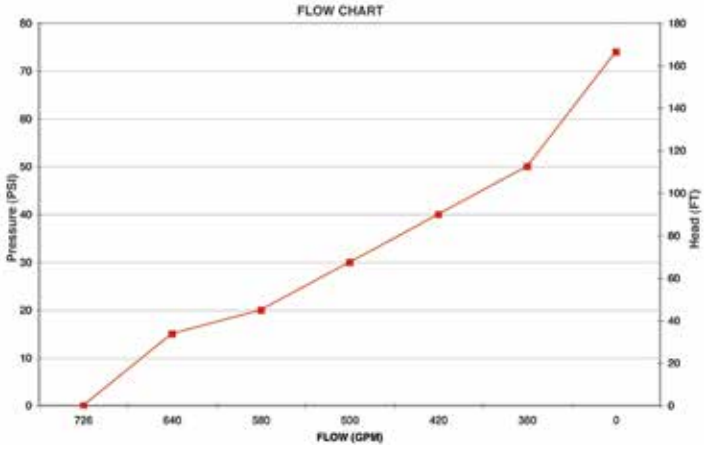


PUMPS

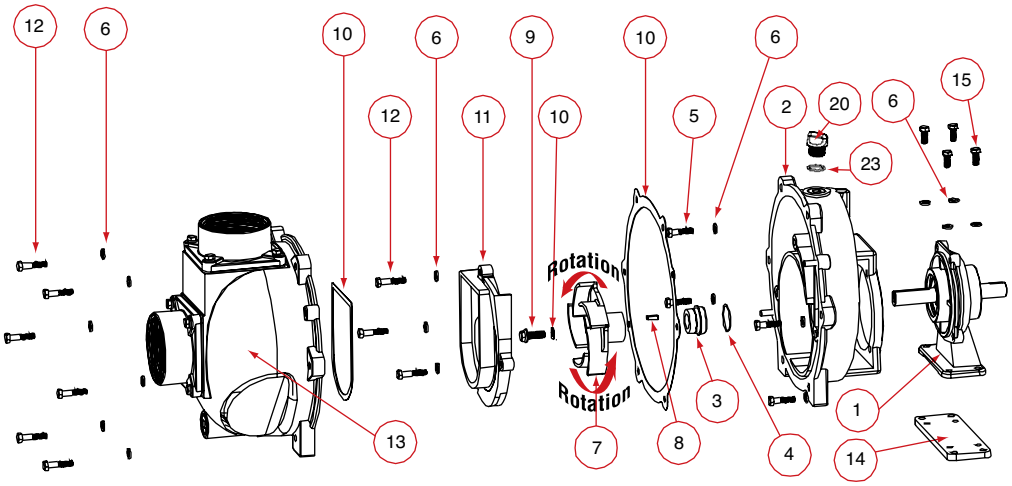


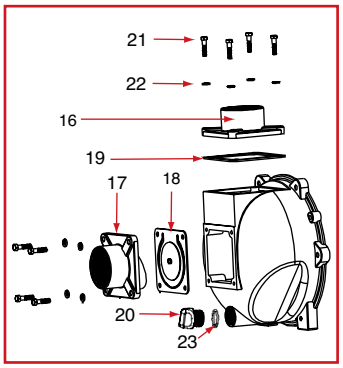


16712 Body Assembly

| REPLACEMENT PARTS 444PIH24 & 444POI | | | |
|---|---|---|---|
| ITEM | PART NO | DESCRIPTION | QTY |
| N/S | 16099 | Impeller Removal Bolt | 1 |
| 2 | 16707 | Rear Bracket | 1 |
| 3 | 18435 | Mechanical Seal | 1 |
| 4 | V10264 | O-Ring | 1 |
| 5 | 17704 | 3/8" - 16 x 1.25" SS Cap Screw | 4 |
| 6 | V20018 | 3/8" SS Lock Washer | 13 |
| 7 | 16775 | 4" Impeller | 1 |
| 8 | 16901 | ¼" SQ. ¾" Key Stock | 1 |
| 9 | 16765 | Impeller Bolt | 1 |
| 10 | 16019 | Gasket Set | 1 |
| 11 | 16702 | Volute | 1 |
| 12 | V20011SS | 3/8" - 16 x 1.75" SS Bolt | 9 |
| 13 | 16712 | Body | 1 |
| N/S | 16751 | Bracket Shim Set | 1 |
| N/S | 16752 | Impeller Shim | 1 |
| N/S | 18033 | Handle | 1 |
| N/S | 18034 | 5/8" SS Jam Nut | 1 |
| 16 | 16000 | Outlet Flange | 1 |
| 17 | 16002 | Inlet Flange | 1 |
| 18 | 16706 | Inlet Gasket w/ Check | 1 |
| 19 | 16011 | Outlet Gasket | 1 |
| 20 | 13777 | ¾" Plug | 2 |
| 21 | 18027 | 3/8" - 16 x 1.50" HHCS | 8 |
| 22 | V20018 | 3/8" SS Lock Washer | 8 |
| 23 | 13778 | O-Ring | 2 |

| REPLACEMENT PARTS 444PBI | | | |
|---|---|---|---|
| ITEM | PART NO | DESCRIPTION | QTY |
| N/S | 16099 | Impeller Removal Bolt | 1 |
| 1 | 18500 | Bearing Pedestal | 1 |
| 2 | 16703 | Rear Bracket (444PBI) | 1 |
| 3 | 16713 | Mechanical Seal | 1 |
| 4 | 16710 | O-Ring | 1 |
| 5 | 17704 | 3/8" - 16 x 1.25" SS Cap Screw | 4 |
| 6 | V20018 | 3/8" SS Lock Washer | 17 |
| 7 | 16772 | 4" Impeller -5 Vane (444PBI) | 1 |
| 7 | 16773 | 3" Impeller (433PBI) | 1 |
| 8 | 16901 | ¼" SQ. ¾" Key Stock | 1 |
| 9 | 16765 | Impeller Bolt | 1 |
| 10 | 16019 | Gasket Set | 1 |
| 11 | 16702 | Volute | 1 |
| 12 | V20011SS | 3/8" - 16 x 1.75" SS Bolt | 9 |
| 13 | 16712 | Body (444PBI) | 1 |
| 14 | 18511 | Adapter Plate | 1 |
| 15 | 18512 | 3/8" - 16 x 0.875" SS HHCS | 4 |
| N/S | 16751 | Bracket Shim Set | 1 |
| N/S | 16752 | Impeller Shim | 1 |
| N/S | 18033 | Handle | 1 |
| N/S | 18034 | 5/8" SS Jam Nut | 1 |
| 16 | 16000 | 4" Outlet Flange (444PBI) | 1 |
| 17 | 16002 | Inlet Flange | 1 |
| 18 | 16706 | Inlet Gasket w/ Check | 1 |
| 19 | 16011 | Outlet Gasket | 1 |
| 20 | 13777 | ¾" Plug | 2 |
| 21 | 18027 | 3/8" - 16 x1.50" HHCS | 8 |
| 22 | V20018 | 3/8" SS Lock Washer | 8 |
| 23 | 13778 | O-Ring | 2 |

# 2" 316 Stainless Steel Pumps with Gas Engines

## FEATURES

- Carbon ceramic seal consists of 316 stainless steel cup and spring with FKM (viton type) Elastomer.
- All 316 stainless steel wettable internal components: –Impeller –Sleeve –Wear plate –Fasteners
- 316 stainless steel housing.
- Dynamically balanced impeller.

**CAUTION-WARNING:** Please do not run pumps dry, restrict or reduce port sizes or dead head pumps. This could cause component failure to pump.

**DO NOT USE WITH FLAMMABLE LIQUIDS.**

**NOTE:** Engine warranty service available at authorized Briggs & Stratton and Honda dealers.

***SHIPPING**: Truck shipments only.

| 2" STAINLESS STEEL PUMPS W/GAS ENGINES | | | |
|---|---|---|---|
| PART NO | DESCRIPTION | HP | QTY |
| 200PH5-SS | 2" SS Pump w/5.5 HP Honda® Engine w/ Pull Rope Only | 5.5 | 1 |
| 200P6PROSS | 2" SS Pump w/6.5 HP Briggs & Stratton® Engine Pro Series w/Pull Rope Only | 6.5 | 1 |

| 2" SS BEARING PEDESTAL PUMPS | | | |
|---|---|---|---|
| PART NO | DESCRIPTION | HP | QTY |
| 200PB-SS | 2" SS Bearing Pedestal w/ ¾" Straight Shaft* | N/A | 1 |

Note: * Straight shaft for long coupling to electric motors

| 2" SS PUMP ONLYS | | | |
|---|---|---|---|
| PART NO | DESCRIPTION | HP | QTY |
| 200PO-SS | 2" SS Pump Only w/ ¾" Shaft Sleeve | N/A | 1 |

| 2" SS C-FLANGE PUMPS | | | |
|---|---|---|---|
| PART NO | DESCRIPTION | HP | QTY |
| 200POSSCF5/8 | 2" SS C-Flange Pump w/ ⅝" Shaft Sleeve | N/A | 1 |
| 200POSSCF7/8 | 2" SS C-Flange Pump w/ ⅞" Shaft Sleeve | N/A | 1 |

Note: Recommendation for ⅝" Shaft: 56C Frame Size, 3 HP, 3450 RPM, & 5" Max Impeller for close coupling to electric motors.

Recommendation for ⅞" Shaft:145TC Frame Size, 3 HP, 3450 RPM, & 5" Max Impeller for close coupling to electric motors.

| UNIVERSAL BASE PLATE ASSEMBLY | | |
|---|---|---|
| PART NO | DESCRIPTION | QTY |
| 18700 | Base Plate Assembly for 1½", 2" & 3" Cast Iron or Poly Pump (Plate, Coupling Guard, Bolt Bag & Shims) | 1 |

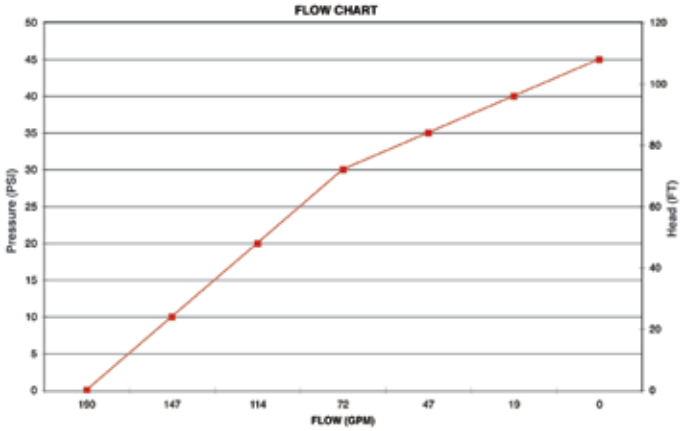


PUMPS

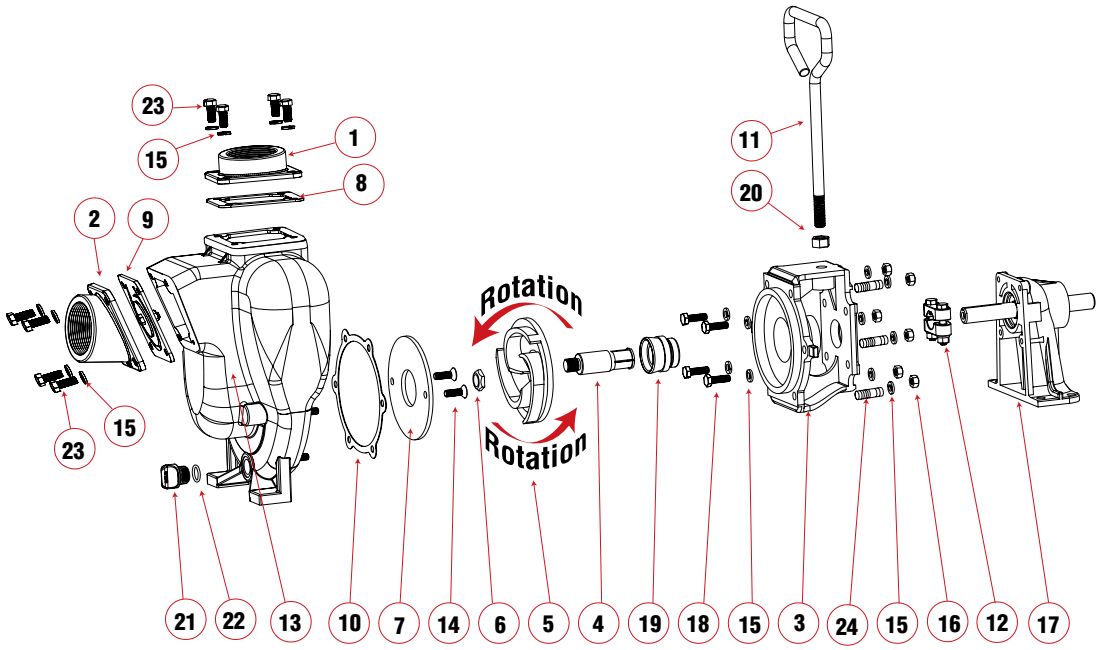


| REPLACEMENT PARTS 2" SS PUMPS | | | |
|---|---|---|---|
| ITEM | PART NO | DESCRIPTION | QTY |
| 1 | 17000SS | SS Outlet Flange | 1 |
| 2 | 17002SS | SS Inlet Flange | 1 |
| 3 | 17004SS | SS Adapter for Gas Engine | 1 |
| 3 | 17046SS | CF Adapter for Electric Motor | 1 |
| 4 | 17005 | 5/8" SS Sleeve Drive | 1 |
| 4 | 17006 | 3/4" SS Sleeve Drive | 1 |
| 4 | 17007 | 7/8" SS Sleeve Drive | 1 |
| 5 | 17008SS | SS Impeller | 1 |
| 5 | 17008-4.1SS | 4.1" SS Impeller | 1 |
| 5 | 17008-4.6SS | 4.6" SS Impeller | 1 |
| 6 | 17009B | 5/8" Impeller Nut | 1 |
| 7 | 17011SS | SS Wear Plate | 1 |
| 8 | 17014 | FKM (viton type) Outlet Gasket | 1 |
| 9 | 17017 | FKM (viton type) Check Valve Assembly Gasket | 1 |
| 10 | 17018 | Adapter Gasket | 1 |
| 11 | 15022 | Handle | 1 |

| REPLACEMENT PARTS 2" SS PUMPS | | | |
|---|---|---|---|
| ITEM | PART NO | DESCRIPTION | QTY |
| 12 | 17023 | 5/8" Clamp, 3/4" SS Shaft (Old Style) | 1 |
| 12 | 17123 | 5/8" Clamp, 3/4" SS Shaft (Keyed Clamp) | 1 |
| 12 | 17024 | 7/8" Clamp, 3/4" SS Shaft | 1 |
| 13 | 17026SS | SS Pump Housing | 1 |
| 14 | 17130SS | 5/16-18 x 1.00" FHSCS, 316 SS | 2 |
| 15 | V10118 | 5/16" Lock Washer | 18 |
| 16 | V10119 | 5/16" -18 SS Hex Nut | 6 |
| 17 | 12882A | Bearing Pedestal Assembly w/ 3/4" Shaft | 1 |
| 18 | 17040 | Bolt | 4 |
| 19 | 17035SS | FKM (viton type) SS Seal Assembly | 1 |
| 20 | 17010 | 1/2" - 24 x 1" HHCS | 1 |
| 21 | 12777SS | 1/2" Stainless Steel Plug | 1 |
| 22 | UV15163V | O-Ring FKM (viton type) | 1 |
| 23 | 17019 | 5/16" - 18 x 3/4" Cap Screw | 8 |
| 24 | 17042 | Stud | 6 |
| N/S | 17100SS | Pump Repair Kit(Consists of 4,5,7,10,14,19) | 1 |

| KITS 2" SS PUMPS | | |
|---|---|---|
| PART NO | EPDM REPAIR KIT NO | EPDM SEAL KIT NO |
| 200PH5-SS | 17100SS | 17035SS |
| 200P6PROSS | 17100SS | 17035SS |
| 200PB-SS | 17100SS | 17035SS |
| 200PO-SS | 17100SS | 17035SS |

# 2" Stainless Steel Pumps with Electric Motors

## FEATURES

- Stainless steel construction for rugged dependable service.
- Stainless steel shaft sleeve to protect engine shaft.
- Carbon ceramic seal with stainless steel cup and spring with FKM (viton type) rubber.
- Replaceable inlet and outlet flanges.
- Dynamically balanced impeller.

**CAUTION-WARNING:** Please do not run pumps dry, restrict or reduce port sizes or dead head pumps. This could cause component failure to pump.

**DO NOT USE WITH FLAMMABLE LIQUIDS.**

**NOTE:** Engine warranty service available at authorized Briggs & Stratton and Honda dealers.

***SHIPPING**: Truck shipments only.

| 2" SS PUMPS W/ELECTRIC MOTORS | | | |
|---|---|---|---|
| PART NO | DESCRIPTION | HP | QTY |
| 234PE3SS | 2" SS Pump w/3.0 HP Three Phase Electric Motor | 3.0 | 1 |
| 234PE5SS | 2" SS Pump w/5.0 HP Three Phase Electric Motor | 5.0 | 1 |
| 234PE51SS | 2" SS Pump w/5.0 HP Single Phase Electric Motor | 5.0 | 1 |

## COMPLETE PUMP WITH EFFICIENT INDUSTRIAL ELECTRIC MOTORS!

| POLYETHYLENE SUCTION BASKET STRAINER | | |
|---|---|---|
| PART NO | DESCRIPTION | QTY |
| 200SBS | 2" Female Thread Poly Basket | 1 |
| 300SBS | 3" Female Thread Poly Basket | 1 |

## MOTOR FEATURES

- Pressure cast aluminum end plates with ribbed design for rigidity.
- Ball bearings, locked drive end bearing.
- Heavy gauge steel frame.
- Motors wound with inverter spike resistance magnet wire.
- Mounted complete on heavy duty cast iron base plate.
- 230 V Motors.

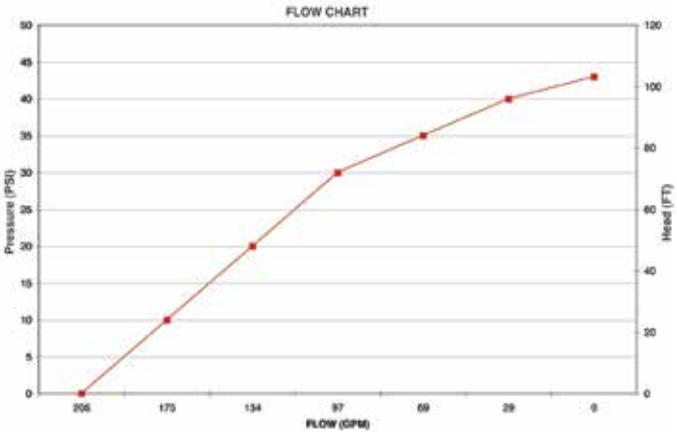

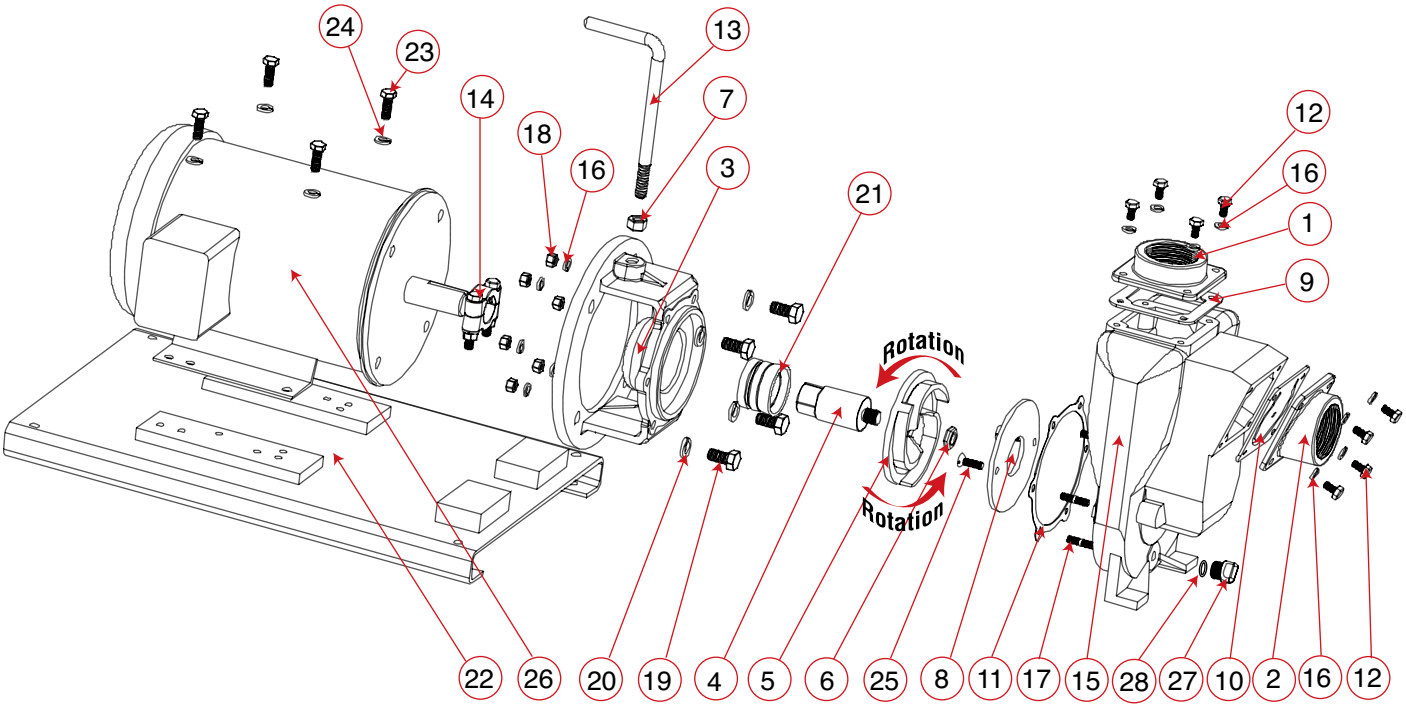


| REPLACEMENT PARTS 234PE3SS | | | |
|---|---|---|---|
| ITEM | PART NO | DESCRIPTION | QTY |
| 1 | 17000SS | Outlet Flange | 1 |
| 2 | 17002SS | Inlet Flange | 1 |
| 3 | 17046SS | C-Flange Adapter | 1 |
| 4 | 17007 | Impeller Shaft | 1 |
| 5 | 17008SS | Impeller | 1 |
| 6 | 17009B | 5/8" Impeller Nut | 1 |
| 7 | 17010 | 1/2" Hex Nut | 1 |
| 8 | 17011SS | Wear Plate | 1 |
| 9 | 17014 | FKM (viton type) Outlet Gasket | 1 |
| 10 | 17017 | FKM (viton type) Gasket & Check Valve | 1 |
| 11 | 17018 | Adapter Gasket | 1 |
| 12 | 17019 | Bolt | 8 |
| 13 | 15022 | Handle | 1 |
| 14 | 17024 | Clamp Assembly w/Key | 1 |
| 15 | 17026SS | Pump Housing | 1 |
| 16 | V10118 | 5/16" Lock Washer | 20 |
| 17 | 17042 | Housing Stud | 6 |
| 18 | V10119 | Hex Nut | 8 |
| 19 | 17449 | Bolt | 4 |
| 20 | 18058 | Washer | 4 |
| 21 | 17035SS | Seal Assembly | 1 |
| 22 | 17701 | Base Plate Assembly | 1 |
| 23 | 17704 | Bolt | 4 |
| 24 | V20018 | 3/8" Lock Washer | 4 |
| 25 | 17130SS | 5/16-18 x 1.00" FHSCS, 316 SS | 2 |
| 26 | BEM3 | Electric Motor | 1 |
| 27 | 12777SS | 1/2" Stainless Steel Plug | 1 |
| 28 | UV15163 | O-Ring FKM (viton type) | 1 |

| REPLACEMENT PARTS 234PE5SS & 234PE51SS | | | |
|---|---|---|---|
| ITEM | PART NO | DESCRIPTION | QTY |
| 1 | 17000SS | Outlet Flange | 1 |
| 2 | 17002SS | Inlet Flange | 1 |
| 3 | 17446SS | C-Flange Adapter | 1 |
| 4 | 17406 | Impeller Shaft | 1 |
| 5 | 17408SS | Impeller | 1 |
| 6 | 17009B | 5/8" Impeller Nut | 1 |
| 7 | 17010 | 1/2" Hex Nut | 1 |
| 8 | 17011SS | Wear Plate | 1 |
| 9 | 17014 | FKM (viton type) Outlet Gasket | 1 |
| 10 | 17017 | FKM (viton type) Gasket & Check Valve | 1 |
| 11 | 17018 | Adapter Gasket | 1 |
| 12 | 17019 | Bolt | 8 |
| 13 | 15022 | Handle | 1 |
| 14 | 18129 | Clamp Assembly w/Key | 1 |
| 15 | 17026SS | Pump Housing | 1 |
| 16 | V10118 | 5/16" Lock Washer | 20 |
| 17 | 17042 | Housing Stud | 6 |
| 18 | V10119 | Hex Nut | 8 |
| 19 | 17449 | Bolt | 4 |
| 20 | 18058 | Washer | 4 |
| 21 | 18025SS | Seal Assembly | 1 |
| 22 | 17701 | Base Plate Assembly | 1 |
| 23 | 17704 | Bolt | 4 |
| 24 | V20018 | 3/8" Lock Washer | 4 |
| 25 | 17130SS | 5/16-18 x 1.00" FHSCS, 316 SS | 2 |
| 26 | BEM5 | Electric Motor | 1 |
| 26 | BEM51 | Electric Motor | 1 |
| 27 | 12777SS | 1/2" Stainless Steel Plug | 1 |
| 28 | UV15163V | O-Ring FKM (viton type) | 1 |

# 2" Stainless Steel Pumps with Hydraulic Motors

### PUMP FEATURES

- Rugged construction for dependable service.
- Carbon ceramic seal with stainless steel cup and spring with FKM (viton type) rubber.
- Replaceable inlet and outlet flanges.
- Dynamically balanced impeller.

### HYDRAULIC MOTOR FEATURES

- Hydraulic fluid capacity
  Minimum 6 Gallons / Maximum 10 Gallons.
- 12 H.P. Motor.
- Open or closed system.
- Minimum 500 P.S.I. / Maximum 2000 P.S.I.

**CAUTION-WARNING:** Please do not run pumps dry, restrict or reduce port sizes or dead head pumps. This could cause component failure to pump.

**DO NOT USE WITH FLAMMABLE LIQUIDS.**

| 2" SS HYDRAULIC PUMPS | | | |
|---|---|---|---|
| PART NO | DESCRIPTION | HP | QTY |
| 200PHYSS | 2" SS Pump w/12 HP Hydraulic Motor | 12 | 1 |

### SPOOL VALVE ASSEMBLY DIAGRAM

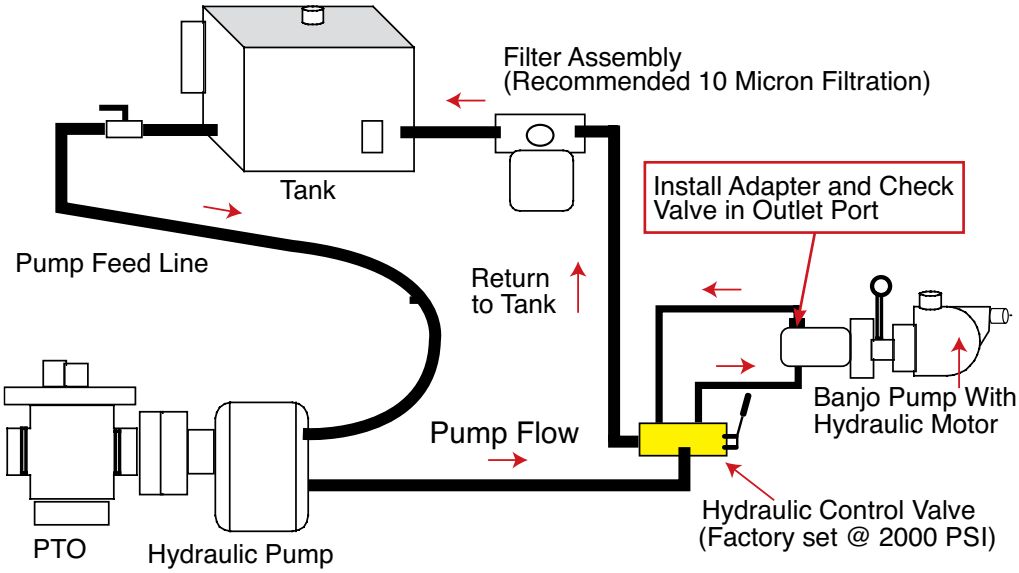

Recommendation:
We recommend using the motor spool control valve or a suitable equivalent. The lack of such a valve in this circuit may cause failure to the hydraulic motor.

| HYDRAULIC MOTOR SPOOL VALVE | | | |
|---|---|---|---|
| PART NO | DESCRIPTION | HP | QTY |
| HSV1000 | Hydraulic Motor Spool Valve | N/A | 1 |

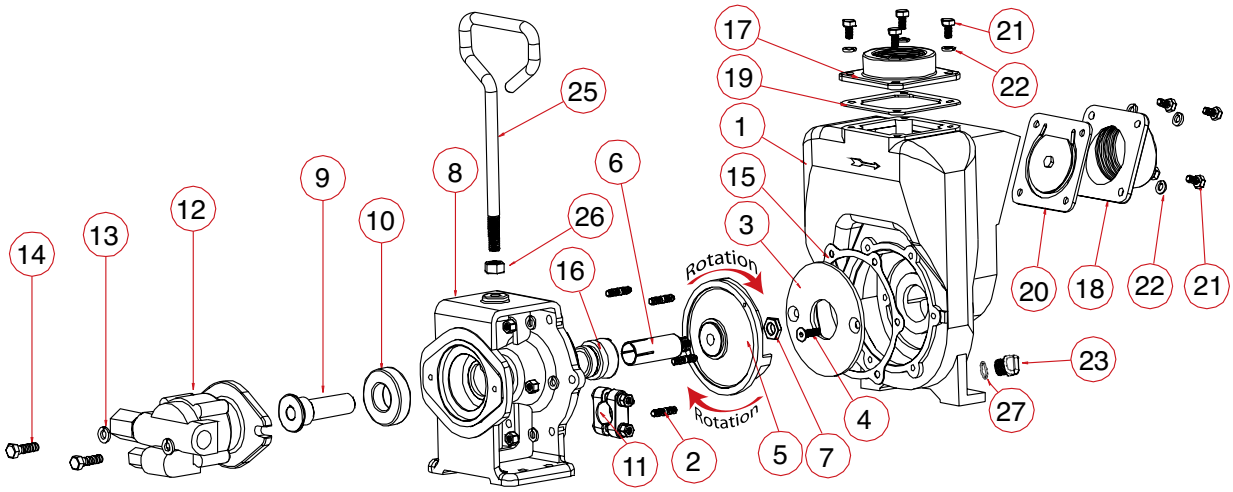


| HYDRAULIC MOTOR DATA | |
|---|---|
| U.S. Gallons/Rev. | 0.0025 |
| Cubic Inches/Rev. | 0.580 |
| Liters/Rev. | 0.0097 |
| Max Hydraulic Pressure | 2000 PSI |
| Min Hydraulic Pressure | 200 PSI |
| Inlet Port | SAE 10 (7/8-14 UNF-2B) |
| Outlet Port | SAE 10 (7/8-14 UNF-2B) |
| Minimum GPM Required | 6 GPM 2400 RPM |
| Maximum GPM Required | 10 GPM 4000 RPM |
| Ideal GPM Required | 9 GPM 3600 RPM |
| **CONNECTION INFORMATION** | |
| Inlet | "A" Port |
| Outlet | "B" Port |
| Supplied check valve is to ensure proper rotation of the Banjo pump. Place check valve in outlet port (marked "B") for proper right hand rotation. | |
| **SPOOL VALVE INFORMATION** | |
| Required Outlet Flow | Min 6 GPM / Max 10 GPM |
| Required System Pressure | Min 500 PSI / Max 2000 PSI |

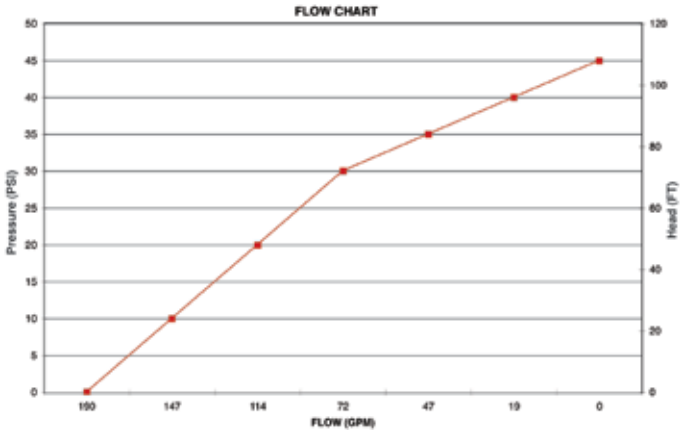


## REPLACEMENT PARTS 2" SS PUMPS

| ITEM | PART NO | DESCRIPTION | QTY |
|---|---|---|---|
| 1 | 17026SS | Pump Housing | 1 |
| 2 | 17042 | Pump Housing Stud | 6 |
| 3 | 17011SS | Wear Plate | 1 |
| 4 | 17130SS | 5/16-18 x 1.00" FHSCS, 316 SS | 2 |
| 5 | 17008SS | 5" Impeller | 1 |
| 6 | 17007 | 7/8" Sleeve Drive for Electric Motor | 1 |
| 7 | 17009B | 5/8" Impeller Nut | 1 |
| 8 | 17049ASS | Hydraulic Adapter | 1 |
| 9 | 17055A | Hydraulic Adapter Shaft | 1 |
| 10 | 17056 | SKF 6206-2RS1 Bearing | 1 |
| 11 | 17024 | 7/8" Clamp, no key | 1 |
| 12 | HY1013 | MGG@0025BC1D3 Hydraulic Motor Assembly | 1 |
| 13 | V20018 | 3/8" Lock Washer | 2 |
| 14 | 18010SS | 3/8" - 16 x 1.25" HHHCS | 2 |
| 15 | 17018 | Gasket Adapter | 1 |
| 16 | 17035SS | FKM (viton type) Seal Assembly | 1 |
| 17 | 17000SS | 2" Outlet Flange | 1 |
| 18 | 17002SS | 2" Inlet Flange | 1 |
| 19 | 17014 | FKM (viton type) Gasket | 1 |
| 20 | 17017 | Gasket Check Valve Assembly | 1 |
| 21 | 17019 | 5/16" -18 x 0.75" Cap Screw | 8 |
| 22 | V10118 | 5/16" Split Lock Washer | 14 |
| 23 | 12777SS | 1/2" Stainless Steel Plug | 1 |
| 24 | V10119 | 5/16"-18 Hex Nut | 6 |
| 25 | 15022 | Handle | 1 |
| 26 | 17010 | 1/2" Hex Nut -13UNF-RH | 1 |
| 27 | UV15163V | O-Ring FKM (viton type) | 1 |

## REPLACEMENT PARTS 2" SS HYDRAULIC ADAPTER

| ITEM | PART NO | DESCRIPTION | QTY |
|---|---|---|---|
| 1 | 17049ASS | SS Hydraulic Motor Adapter | 1 |
| 2 | 17018 | Gasket Adapter | 1 |
| 3 | 17035SS | Seal Assembly | 1 |
| N/S | 17007 | 7/8" SS Shaft Sleeve | 1 |
| N/S | 12214A | Shim | 1 |
| 4 | 17056 | SKF 6206-2RS1 Bearing | 1 |
| 5 | 17055A | Hydraulic Adapter Shaft | 1 |
| 6 | HY1013 | Gresen® Hydraulic Motor | 1 |
| 7 | V20018 | Lock Washer | 2 |
| 8 | 18010SS | Bolt | 2 |

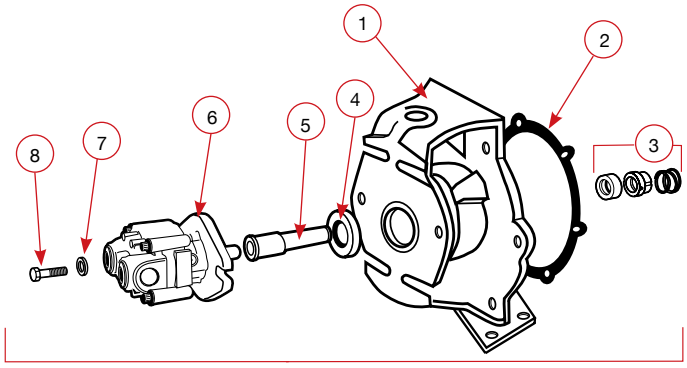

# 3" 316 Stainless Steel Pumps with Gas Engines

## FEATURES

- Carbon ceramic seal consists of 316 stainless steel cup and spring with FKM (viton type) Elastomer.
- All 316 stainless steel wettable internal components: –Impeller –Sleeve –Wear plate –Fasteners
- 316 stainless steel housing.
- Dynamically balanced impeller.

**CAUTION-WARNING:** Please do not run pumps dry, restrict or reduce port sizes or dead head pumps. This could cause component failure to pump.

**DO NOT USE WITH FLAMMABLE LIQUIDS.**

**NOTE:** Engine warranty service available at authorized Briggs & Stratton and Honda dealers.

***SHIPPING**: Truck shipments only.

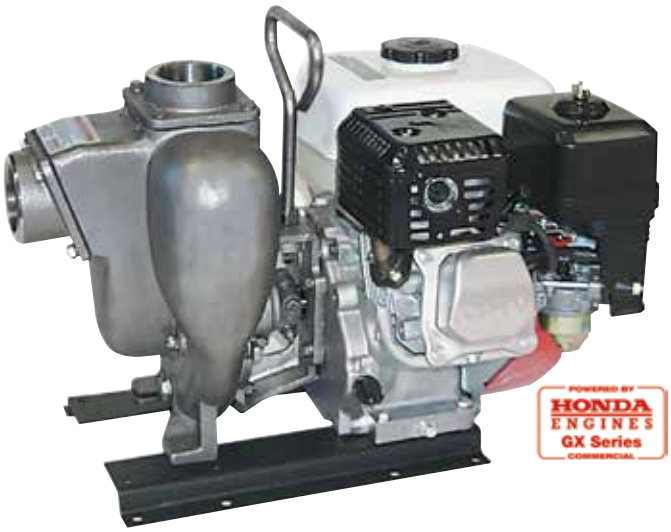


| 3" SS BEARING PEDESTAL PUMP | | | |
|---|---|---|---|
| PART NO | DESCRIPTION | HP | QTY |
| 300PB-SS | 3" SS Bearing Pedestal w/ 1" Straight Shaft* | N/A | 1 |

Note: * Straight shaft for long coupling to electric motors

| 3" SS PUMP ONLY | | | |
|---|---|---|---|
| PART NO | DESCRIPTION | HP | QTY |
| 300PO-SS | 3" SS Pump Only w/ 1" Shaft Sleeve | N/A | 1 |

| 3" SS C-FLANGE PUMP | | | |
|---|---|---|---|
| PART NO | DESCRIPTION | HP | QTY |
| 300PO-SSCF | 3" SS C-Flange Pump w/ 1⅛" Shaft Sleeve | N/A | 1 |

| 3" STAINLESS STEEL PUMPS W/GAS ENGINES | | | |
|---|---|---|---|
| PART NO | DESCRIPTION | HP | QTY |
| 300PH11-SS | 3" SS Pump w/11 HP Honda® Engine w/Electric Start & Pull Rope | 11 | 1 |
| 300PH13SS | 3" SS Pump w/13 HP Honda® Engine w/Electric Start & Pull Rope | 13 | 1 |

Note: Recommendation for ⅝" Shaft: 56C Frame Size, 3 HP, 3450 RPM, & 5" Max Impeller for close coupling to electric motors.

Recommendation for ⅞" Shaft:145TC Frame Size, 3 HP, 3450 RPM, & 5" Max Impeller for close coupling to electric motors.

| UNIVERSAL BASE PLATE ASSEMBLY | | |
|---|---|---|
| PART NO | DESCRIPTION | QTY |
| 18700 | Base Plate Assembly for 1½", 2" & 3" Cast Iron or Poly Pump (Plate, Coupling Guard, Bolt Bag & Shims) | 1 |

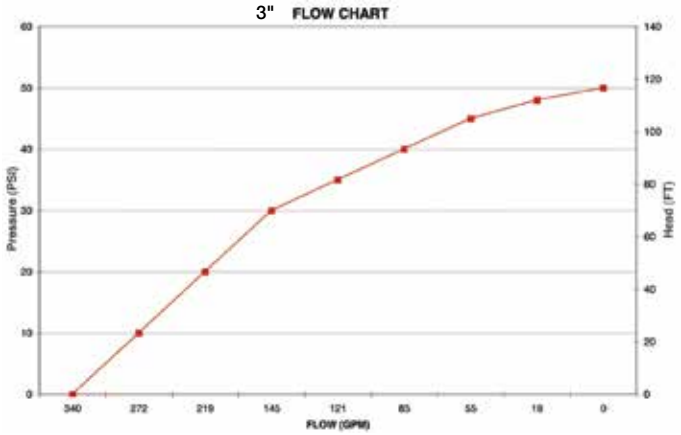


PUMPS

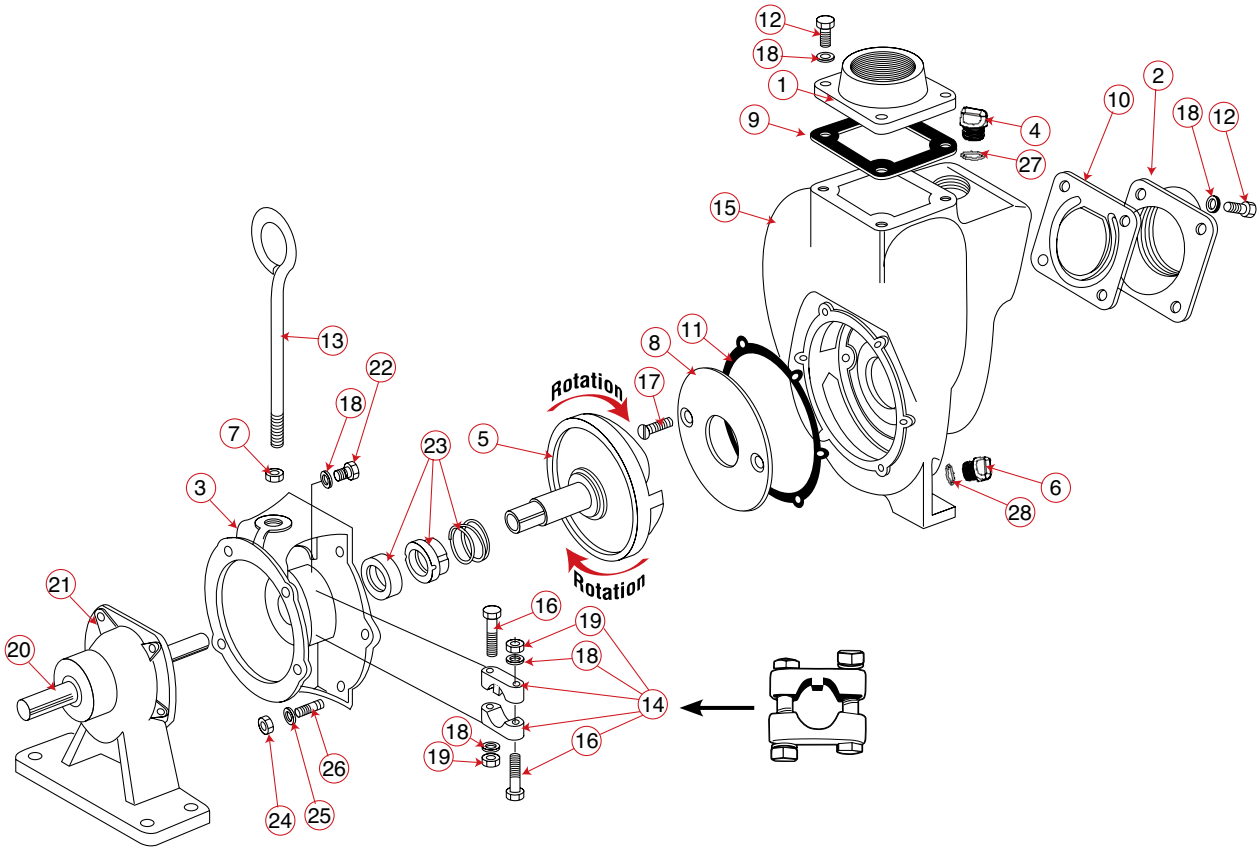


| REPLACEMENT PARTS 3" SS PUMPS | | | |
|---|---|---|---|
| ITEM | PART NO | DESCRIPTION | QTY |
| 1 | 18008SS | NPT Outlet Flange | 1 |
| 2 | 18012SS | NPT Inlet Flange | 1 |
| 3 | 18026SS | Adapter for Gas Engine | 1 |
| 3 | 18048SS | SS C-Flange Adapter | 1 |
| 4 | 13777SS | ¾" Stainless Steel Plug | 1 |
| 5 | 18023SS | 1" SS Impeller & Drive Shaft for Gas Engine | 1 |
| 5 | 18023-1.125SS | 1⅛" SS Impeller & Drive Shaft for Electric Motor | 1 |
| 6 | 12777SS | ½" Stainless Steel Plug | 1 |
| 7 | 18034 | ⅝" SS Jam Nut | 1 |
| 8 | 18004SS | SS Wear Plate | 1 |
| 9 | 18044 | FKM (viton type) Outlet Gasket | 1 |
| 10 | 18042 | FKM (viton type)Gasket Check Valve Assembly | 1 |
| 11 | 18021 | Adapter Gasket | 1 |
| 12 | 18010SS | ⅜" - 16 x 1⅛" SS Cap Screw HXHD | 8 |
| 13 | 18033 | Handle | 1 |
| 14 | 18129 | Clamp Assembly | 1 |

| REPLACEMENT PARTS 3" SS PUMPS | | | |
|---|---|---|---|
| ITEM | PART NO | DESCRIPTION | QTY |
| 15 | 18001SS | SS Pump Housing | 1 |
| 16 | 18030 | ⅜" -24 x 2¼" SS Bolt | 2 |
| 17 | 18106SS | Wear Plate Flat Head Screw | 2 |
| 18 | V20018 | ⅜" Lock Washer | 8 |
| 19 | 18032 | ⅜" x 24 SS Hex Nut | 2 |
| 20 | 18504 | 1" Shaft | 1 |
| 21 | 18500 | Bearing Pedestal | 1 |
| 22 | 18027 | ⅜" -16 x 1½" HHCS | 1 |
| 23 | 18025SS | FKM (viton type) Seal Assembly | 1 |
| 24 | V20019 | ⅜" 16 SS Hex Nut | 6 |
| 25 | V20018 | ⅜" SS Lock Washer | 6 |
| 26 | 18218 | ⅜" -16 x 24 x 2⅛" SS Stud | 6 |
| 27 | 13778V | O-Ring FKM (viton type) | 1 |
| 28 | UV15163V | O-Ring FKM (viton type) | 1 |
| N/S | 18100SS | Repair Kit(Consist of items 5, 8,11,17 & 23) | 1 |

| KITS 3" SS PUMPS | | |
|---|---|---|
| PART NO | EPDM REPAIR KIT NO | EPDM SEAL KIT NO |
| 300PH11-SS | 18100SS | 18025SS |
| 300PH13SS | 18100SS | 18025SS |
| 300PB-SS | 18100SS | 18025SS |
| 300PO-SS | 18100SS | 18025SS |

# 3" Stainless Steel Pumps with Hydraulic Motors

### PUMP FEATURES

- Rugged construction for dependable service.
- Carbon ceramic seal with stainless steel cup and spring with FKM (viton type) rubber.
- Replaceable inlet and outlet flanges.
- Dynamically balanced impeller.

### HYDRAULIC MOTOR

- Hydraulic fluid capacity
  Minimum 9 Gallons / Maximum 13 Gallons.
- 21 H.P. Motor.
- Open system.
- Minimum 600 P.S.I. / Maximum 3000 P.S.I.

**CAUTION-WARNING:** Please do not run pumps dry, restrict or reduce port sizes or dead head pumps. This could cause component failure to pump.

**DO NOT USE WITH FLAMMABLE LIQUIDS.**

| 3" SS HYDRAULIC PUMPS | | | |
|---|---|---|---|
| PART NO | DESCRIPTION | HP | QTY |
| 300PHYSS | 3" SS Pump w/21 HP Hydraulic Motor | 21 | 1 |

### SPOOL VALVE ASSEMBLY DIAGRAM

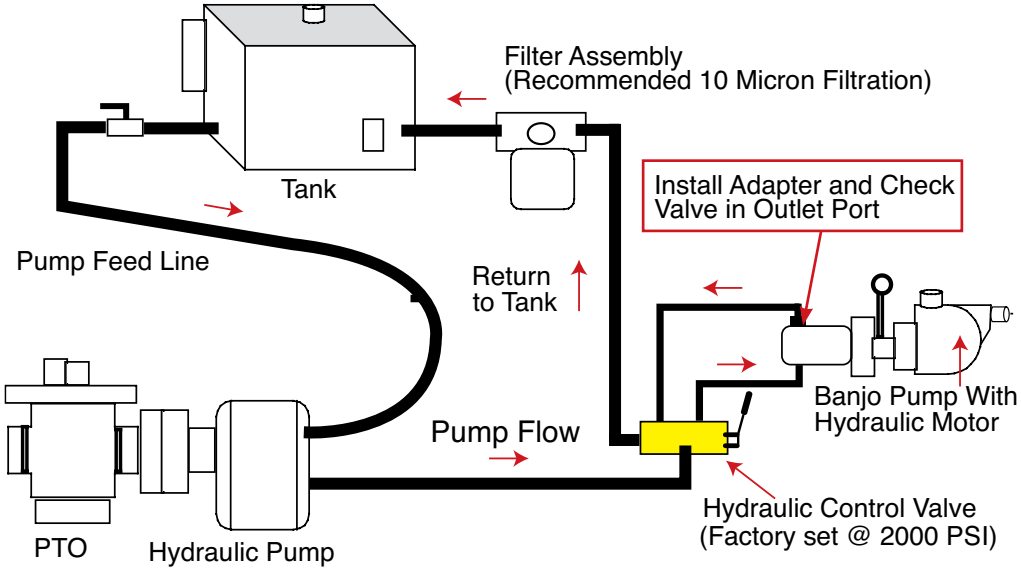

Recommendation:
We recommend using the motor spool control valve or a suitable equivalent. The lack of such a valve in this circuit may cause failure to the hydraulic motor.

| HYDRAULIC MOTOR SPOOL VALVE | | | |
|---|---|---|---|
| PART NO | DESCRIPTION | HP | QTY |
| HSV1000 | Hydraulic Motor Spool Valve | N/A | 1 |

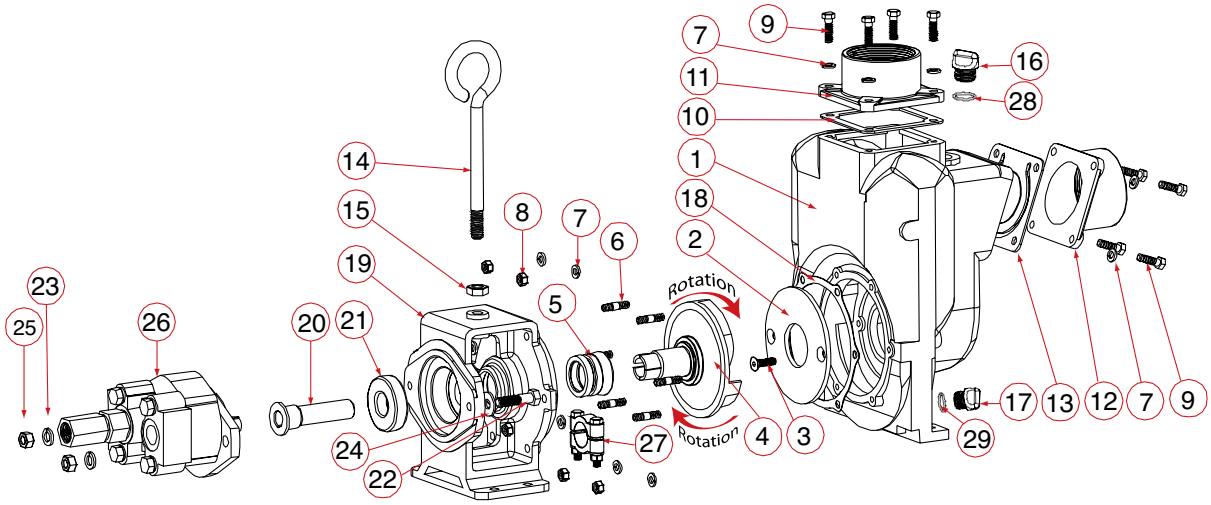


| HYDRAULIC MOTOR DATA | |
|---|---|
| U.S. Gallons/Rev. | 0.0038 |
| Cubic Inches/Rev. | 0.878 |
| Liters/Rev. | 0.0144 |
| Max Hydraulic Pressure | 3000 PSI |
| Min Hydraulic Pressure | 600 PSI |
| Inlet Port | 1-1/16-12UN-2B |
| Outlet Port | 1-5/16-12UN-2B |
| Minimum GPM Required | 9 GPM 2370 RPM |
| Maximum GPM Required | 13 GPM 3450 RPM |
| Ideal GPM Required | 9 GPM 3600 RPM |
| **CONNECTION INFORMATION** | |
| Inlet | "A" Port |
| Outlet | "B" Port |
| Supplied check valve is to ensure proper rotation of the Banjo pump. Place check valve in outlet port (marked "B") for proper right hand rotation. It is recommended that a minimum ¾" inlet line & a minimum 1" outlet line be used. The outlet port must be connected directly back to the hydraulic fluid reservoir & not to any valving, regulators or flow diverters. The outlet port/return line back pressure must not exceed 250 PSI. | |
| **SPOOL VALVE INFORMATION** | |
| Required Outlet Flow | Min 9 GPM / Max 13 GPM |
| Required System Pressure | Min 600 PSI / Max 3000 PSI |

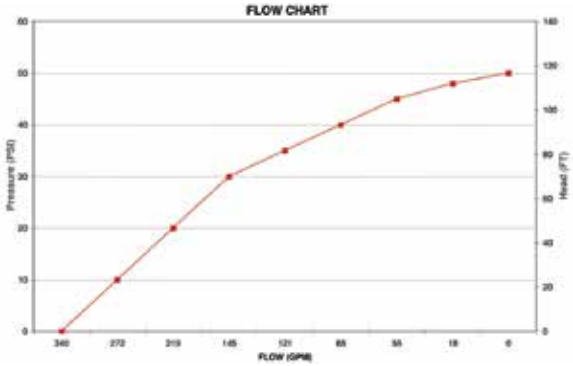


## REPLACEMENT PARTS 3" SS PUMPS

| ITEM | PART NO | DESCRIPTION | QTY |
|---|---|---|---|
| 1 | 18001SS | Pump Housing | 1 |
| 2 | 18004SS | Wear Plate | 1 |
| 3 | 18106SS | ⅜"-16 x 1.25" HHCS | 2 |
| 4 | 18023SS | Impeller & Drive Shaft | 1 |
| 5 | 18025SS | FKM (viton type) Mechanical Seal | 1 |
| 6 | 18218 | ⅜" -16 x 24 x 2⅛" SS Stud | 6 |
| 7 | V20018 | ⅜" Split Lock Washer | 14 |
| 8 | V20019 | ⅜" 16 SS Hex Nut | 6 |
| 9 | 18010SS | ⅜" - 16 x 1.25" HHCS | 8 |
| 10 | 18044 | FKM (viton type) Outlet Gasket | 1 |
| 11 | 18008SS | NPT Outlet Flange | 1 |
| 12 | 18012SS | NPT Inlet Flange | 1 |
| 13 | 18042 | FKM(viton type) Gasket Check Valve Assembly | 1 |
| 14 | 18033 | Handle | 1 |
| 15 | 18034 | ⅝" SS Jam Nut | 1 |
| 16 | 13777SS | ¾" Stainless Steel Plug | 1 |
| 17 | 12777SS | ½" Stainless Steel Plug | 1 |
| 18 | 18021 | Adapter Gasket | 1 |
| 19 | 18049SS | Hydraulic Motor Adapter | 1 |
| 20 | 18055 | Hydraulic Adapter Shaft | 1 |
| 21 | 18502 | Bearing | 1 |
| 22 | 18056 | ½"-13 x 2" HHCS | 2 |
| 23 | 18058 | ½" Split Lock Washer | 2 |
| 24 | 18059 | ½" Flat Washer | 2 |
| 25 | 17010 | ½" Hex Nut | 2 |
| 26 | HY1012 | UM16-45A-HX Hydraulic Motor Assembly | 1 |
| 27 | 18029 | Clamp Assembly Unkeyed | 1 |
| 28 | 13778V | O-Ring FKM (viton type) | 1 |
| 29 | UV15163V | O-Ring FKM (viton type) | 1 |
| N/S | 18100SS | Repair Kit(Consist of items 2, 3, 4, 5 & 18) | 1 |

## REPLACEMENT PARTS 3" SS HYDRAULIC ADAPTER

| ITEM | PART NO | DESCRIPTION | QTY |
|---|---|---|---|
| 1 | 18049SS | C-Flange Hydraulic Motor Adapter | 1 |
| 2 | 18021 | Gasket Adapter | 1 |
| 3 | 18025SS | Seal Assembly | 1 |
| 4 | 18502 | SKF 66306-2RS1/C3 Bearing | 1 |
| 5 | 18055 | Hydraulic Adapter Shaft | 1 |
| 6 | HY1012 | Tyrone® Hydraulic Motor | 1 |
| 7 | 18059 | ½" Lock Washer | 2 |
| 8 | 18058 | ½" Split Lock Washer Bolt | 2 |
| 9 | 18056 | ½"-13 x 2" HHCS Bolt | 2 |
| 10 | 17010 | ½" Hex Nut | 2 |
| 11 | 18600SS | Hydraulic Motor Adapter Assembly | 1 |

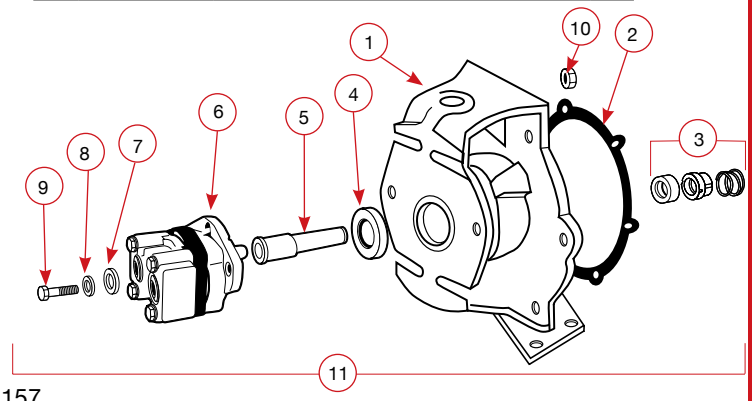

| ENGINE REFERENCE | | | | | |
|---|---|---|---|---|---|
| **BANJO PART NO** | **E3** | **E6.5PRO** | **E6.5PROE** | **E11PROE** | **E23** |
| **MANUFACTURER** | Briggs & Stratton® | Briggs & Stratton® | Briggs & Stratton | Briggs & Stratton® | Briggs & Stratton |
| **MODEL NO** | 91200 | 122032013738C1040 | 130G37-932941 | 2123320139B1G1032 | 386447-3048-G1 |
| **RATED HP** | 3.5 HP @ 3600 RPM | 6.5 HP @ 3600 | 6.5 HP @ 3600 RPM | 11 HP @ 3600 | 23.0 HP @ 3600 RPM |
| **RATED TORQUE** | 4.9 ft-lbs @ 2800 RPM | 9 ft-lbs @ 2800 RPM | | 15.50 ft-lbs @ 2800 RPM | |
| **SHAFT SIZE** | ¾" Diameter w/ 3/16" Keyway | ¾" Diameter w/ 3/16" Keyway | 3/4" X 2 27/64", 3/16" Keyway | ¾" Diameter w/ 3/16" Keyway | 1 1/8" X 4",1/4" Keyway |
| **SHAFT ID THREAD** | 5/16"-24 UNF 2B | 5/16"-24 UNF 2B | 5/16"-24 UNF | 5/16"-24 UNF 2B | 3/8" - 24 UNF |
| **ENGINE OIL REQUIRED** | Synethetic 5W30 | Above 40°F: 30W<br>Below 40°F: 5W30 | Above 40°F: 30W<br>Below 40°F: 5W30 | Synethetic 10W30 | Above 40°F: 30W<br>Below 40°F: 5W30 |
| **ENGINE OIL CAPACITY** | 21 oz | 20 oz | 20.0 oz | 28 oz | 48.0 oz |
| **FUEL REQUIRED** | 77 | 77 | 87 | 77 | 87 |
| **FUEL TANK CAPACITY** | .50 Gallon | 1 Gallon | 0.825 | 1 Gallon | N/A |
| **OIL ALERT** | N | N | Y | N | N |
| **ELCTRIC START** | N | N | Y | N | Y |
| **OVER HEAD VALVE** | N | N | Y | N | Y |

| ENGINE REFERENCE | | |
|---|---|---|
| **BANJO PART NO** | **E5H** | **E5HE** |
| **MANUFACTURER** | Honda® | Honda® |
| **MODEL NO** | GX160 | GX160 |
| **RATED HP** | 5.4 HP @ 3600 | 5.4 HP @ 3600 |
| **RATED TORQUE** | 8.0 ft-lbs @ 2500 RPM | 8.0 ft-lbs @ 2500 RPM |
| **SHAFT SIZE** | ¾" Diameter w/ 3/16" Keyway | ¾" Diameter w/ 3/16" Keyway |
| **SHAFT ID THREAD** | 5/16"-24 UNF 2B | 5/16"-24 UNF 2B |
| **ENGINE OIL REQUIRED** | 10W30 | 10W30 |
| **ENGINE OIL CAPACITY** | .63 qt | .63 qt |
| **FUEL REQUIRED** | 86 | 86 |
| **FUEL TANK CAPACITY** | .95 Gallon | .95 Gallon |
| **OIL ALERT** | Y | Y |
| **ELCTRIC START** | N | Y |
| **OVER HEAD VALVE** | Y | Y |

## For Engine Warranty Service Contact:

**Briggs and Stratton: (414) 259-5262 or www.briggsandstratton.com**

**Honda: (800) 426-7701 or www.honda.com**

| ENGINE REFERENCE | | | | | |
|---|---|---|---|---|---|
| **BANJO PART NO** | **E6H** | **E8H** | **E11H** | **E13H** | **E24H** |
| **MANUFACTURER** | Honda® | Honda® | Honda® | Honda® | Honda® |
| **MODEL NO** | GX200 | GX240 | GX340 | GX390 | GX690RTAF |
| **RATED HP** | 6.4 HP @ 3600 | 8.0 HP @ 3600 | 11.0 HP @ 3600 | 13.0 HP @ 3600 | 22.1 HP @ 3600 RPM |
| **RATED TORQUE** | 7.76 ft-lbs @ 2600 RPM | 12.3 ft-lbs @ 2500 RPM | 17.4 ft-lbs @ 2500 RPM | 19.5 ft-lbs @ 2500 RPM | 35.6 ft-lb @ 2500 RPM |
| **SHAFT SIZE** | ¾" Diameter w/ 3/16" Keyway | 1" Diameter w/ ¼" Keyway | 1" Diameter w/ ¼" Keyway | 1" Diameter w/ ¼" Keyway | 1 1/8" x 4", 1/4" Keyway |
| **SHAFT ID THREAD** | 5/16"-24 UNF 2B | 3/8"-24 UNF 2B | 3/8"-24 UNF 2B | 3/8"-24 UNF 2B | 7/16" - 20 UNF-2B |
| **ENGINE OIL REQUIRED** | 10W30 | 10W30 | 10W30 | 10W30 | 10W30 |
| **ENGINE OIL CAPACITY** | .63 qt | 1.16 qt | 1.16 qt | 1.16 qt | 2.1 qt |
| **FUEL REQUIRED** | 86 | 86 | 86 | 86 | 86 |
| **FUEL TANK CAPACITY** | .95 Gallon | 1.59 Gallon | 1.72 Gallon | 1.72 Gallon | N/A |
| **OIL ALERT** | Y | Y | Y | Y | Y |
| **ELCTRIC START** | N | Y | Y | Y | Y |
| **OVER HEAD VALVE** | Y | Y | Y | Y | Y |

| ENGINE REFERENCE | | | | |
|---|---|---|---|---|
| **BANJO PART NO** | **BEM3** | **BEM5** | **BEM51** | **BEM15** |
| **MANUFACTURER** | Marathon® | Baldor® | Baldor® | Marathon® |
| **MODEL NO** | C236 | CEM3613T | CEM3613TM | 215TTFW14010 |
| **RATED HP** | 3 HP | 5 HP | 5 HP | 15 HP |
| **SHAFT SIZE** | 7/8" | 11/8" | 11/8" | 1 3/8" |
| **DESCRIPTION** | TEFC | TEFC | TEFC | TEFC |
| **PHASE** | 3 | 3 | 1 | 3 |
| **RPM @ 60 HZ** | 3450 | 3450 | 3450 | 3450 |
| **NEMA FRAME SIZE** | 145TC | 184TC | 184TC | 215TC |
| **VOLTAGE** | 208-230/460 | 230/460 | 230 | 208-230/460 |
| **EFF@FULL LOAD** | 85.5 | 88.5 | 83 | 88.5 |

| BRITISH PIPE THREAD | | |
|---|---|---|
| PART NO | DESCRIPTION | PAGE NO. |
| DM100ABSS | 1" Stainless Steel Male Dry Mate with British Standard Pipe Thread & All PTFE Seals | 58 |
| DM100DBSS | 1" Stainless Steel Female Dry Mate with British Standard Pipe Thread & FKM (viton type) Face Seal | 58 |
| DM100DBSSE | 1" Stainless Steel Female Dry Mate with British Standard Pipe Thread & EPDM Face Seal | 58 |
| DM100DBSST | 1" Stainless Steel Female Dry Mate with British Standard Pipe Thread & Kalrez Face Seal | 58 |
| DM150AB | 1½" Poly Male Dry Mate with British Standard Pipe Thread & FKM(viton type) Face Seal | 88 |
| DM150ABSS | 1½" Stainless Steel Male Dry Mate with British Standard Pipe Thread & All PTFE Seals | 54 |
| DM150DB | 1½" Poly Female Dry Mate with British Standard Pipe Thread | 59 |
| DM150DBSS | 1½" Stainless Steel Female Dry Mate with British Standard Pipe Thread & FKM (viton type) Face Seal | 59 |
| DM150DBSSE | 1½" Stainless Steel Female Dry Mate with British Standard Pipe Thread & EPDM Face Seal | 59 |
| DM150DBSST | 1½" Stainless Steel Female Dry Mate with British Standard Pipe Thread & Kalrez Face Seal | 59 |
| DM200AB | 2" Poly Male Dry Mate with British Standard Pipe Threads & FKM (viton type) Face Seal | 55 |
| DM200ABSS | 2" Stainless Steel Male Dry Mate with British Standard Pipe Thread | 59 |
| DM200DB | 2" Poly Female Dry Mate with British Standard Pipe Threads & FKM (viton type) Face Seal | 55 |
| DM200DBSS | 2" Stainless Steel Female Dry Mate with British Standard Pipe Thread & FKM (viton type) Face Seal | 60 |
| DM200DBSSE | 2" Stainless Steel Female Dry Mate with British Standard Pipe Thread & EPDM Face Seal | 60 |
| DM200DBSST | 2" Stainless Steel Female Dry Mate with British Standard Pipe Thread & Kalrez Face Seal | 60 |
| DM220ABSS | 2" Male x BSP Threads w/PTFE Seals | 61 |
| DM220DBSS | 2" FP Female x BSP Threads | 61 |
| DM220DBSSE | 2" FP Female x BSP Threads w/EPDM Seals | 61 |
| DM220DBSSTS | 2" FP Female x BSP Threads w/ PTFE Encap O-Ringw/ PTFE Encap O-Ring | 61 |
| M100BSP | 1" Manifold Flange x 1" Male British Standard Pipe Thread | 46 |
| M200BSP | 2" Manifold Flange x 2" Male British Standard Pipe Thread | 46 |
| M220BSP | 2" Full Port Manifold Flange x 2" Male British Standard Pipe Thread | 46 |
| M300BSP | 3" Full Port Manifold Flange x 3" Male British Standard Pipe Thread | 46 |
| NIP2101 | 2" NPT x British Standard Pipe Thread-White | 64 |

| | |
|---|---|
| 12046 | 103, 129 |
| 12052 | 103 |
| 12099 | 103, 111, 127, 129, 99 |
| 12155 | 101, 109, 115 |
| 12705 | 101, 103, 105, 107, 109, 111, 113, 115, 127, 129, 131, 133, 143, 145, 99 |
| 12709 | 101, 109, 115, 131, 133, 143, 145 |
| 12710 | 105, 107, 111, 113, 127, 129, 99 |
| 12713 | 103, 105, 107, 111, 113, 99 |
| 12716 | 107, 111, 127, 99 |
| 12717 | 101, 103, 105, 107, 109, 111, 113, 115, 127, 129, 131, 133, 143, 145, 99 |
| 12720 | 101, 103, 105, 107, 109, 111, 113, 115, 99 |
| 12723 | 92 |
| 12724 | 92 |
| 12725 | 101, 103, 105, 107, 109, 111, 113, 115, 99 |
| 12754 | 101, 103, 105, 107, 109, 111, 113, 115, 99 |
| 12756 | 103, 129 |
| 12766 | 101, 109, 115, 131 |
| 12772 | 101, 103, 105, 107, 109, 99 |
| 12777 | 101, 103, 105, 109, 115, 117, 119, 121, 123, 125, 131, 133, 135, 137, 139, 143, 145, 49, 88, 92, 99 |
| 12884 | 117, 119 |
| 12900 | 101, 103, 105, 107, 109, 111, 113, 115, 99 |
| 12901 | 101, 103, 105, 107, 109, 111, 113, 115, 127, 129, 131, 133, 143, 145, 99 |
| 13000 | 111, 113 |
| 13034 | 101, 109, 115, 133, 143 |
| 13055 | 115, 133, 143, 145 |
| 13702 | 111, 113, 115 |
| 13712 | 111, 113, 115 |
| 13719 | 101, 109, 115, 131, 133, 143, 145 |
| 13765 | 111, 141 |
| 13766 | 115, 143 |
| 13771 | 111, 113 |
| 13772 | 111, 115 |
| 13777 | 111, 113, 115, 127, 129, 131, 133, 135, 137, 139, 141, 143, 145, 147, 51, 95 |
| 13778 | 111, 113, 115, 127, 129, 131, 133, 135, 137, 139, 141, 143, 145, 147, 51, 95 |
| 13999 | 111, 113 |
| 14766 | 115 |
| 15000 | 127, 129 |
| 15022 | 117, 119, 121, 123, 125, 127, 129, 149, 151, 153 |
| 15025 | 141 |
| 15055 | 131 |

| | |
|---|---|
| 15702 | 127, 129, 131, 133 |
| 15703 | 127, 129 |
| 15712 | 127, 129 |
| 15751 | 111, 127, 129 |
| 15752 | 127, 129 |
| 15772 | 127, 129, 131, 133 |
| 15999 | 127, 129 |
| 16000 | 147 |
| 16001 | 141 |
| 16002 | 147 |
| 16003 | 141 |
| 16011 | 141, 147 |
| 16019 | 141, 147 |
| 16099 | 141, 147 |
| 16702 | 141, 147 |
| 16703 | 147 |
| 16704 | 141 |
| 16706 | 141, 147 |
| 16707 | 147 |
| 16710 | 141, 147 |
| 16712 | 147 |
| 16713 | 141, 147 |
| 16733 | 141 |
| 16751 | 141, 147 |
| 16752 | 141, 147 |
| 16765 | 141, 147 |
| 16772 | 147 |
| 16773 | 141, 147 |
| 16774 | 141 |
| 16775 | 147 |
| 16901 | 115, 133, 141, 143, 145, 147 |
| 17000 | 119, 121, 123, 125, 127 |
| 17001 | 117, 125 |
| 17002 | 119, 121, 123, 125 |
| 17003 | 117, 125 |
| 17004 | 117, 119 |
| 17005 | 117, 119, 149 |
| 17006 | 117, 119, 149 |
| 17007 | 117, 119, 123, 125, 149, 151, 153 |
| 17008 | 117, 119, 123, 125 |
| 17010 | 117, 119, 121, 123, 125, 127, 129, 139, 149, 151, 153, 157 |
| 17011 | 117, 119, 123, 125 |
| 17013 | 117, 119, 121, 123, 125, 127 |
| 17014 | 149, 151, 153 |
| 17016 | 117, 119, 121, 123, 125 |
| 17017 | 149, 151, 153 |
| 17018 | 117, 119, 121, 123, 125, 149, 151, 153 |
| 17019 | 117, 119, 121, 123, 125, 127, 149, 151, 153 |
| 17023 | 117, 119, 149 |

| | |
|---|---|
| 17024 | 117, 119, 123, 125, 149, 151, 153 |
| 17026 | 117, 119, 123, 125 |
| 17028 | 117, 119, 125 |
| 17029 | 143 |
| 17032 | 121 |
| 17033 | 117, 119, 127 |
| 17034 | 127 |
| 17035 | 117, 119, 123, 125 |
| 17040 | 117, 119, 149 |
| 17042 | 117, 119, 123, 125, 149, 151, 153 |
| 17046 | 117, 119, 123 |
| 17056 | 113, 125, 153 |
| 17100 | 117, 119 |
| 17123 | 117, 119, 121, 149 |
| 17130 | 117, 119, 123, 125 |
| 17202 | 121 |
| 17208 | 121 |
| 17226 | 121 |
| 17235 | 121 |
| 17242 | 121 |
| 17406 | 123, 151 |
| 17408 | 123 |
| 17446 | 123 |
| 17449 | 123, 145, 151 |
| 17701 | 103, 123, 129, 151 |
| 17704 | 103, 123, 129, 135, 137, 141, 147, 151 |
| 17901 | 141 |
| 18001 | 135, 137, 139 |
| 18004 | 135, 137, 139 |
| 18008 | 135, 137, 139 |
| 18009 | 135, 137, 139 |
| 18012 | 135, 137, 139 |
| 18013 | 135, 137, 139 |
| 18021 | 135, 137, 139, 155, 157 |
| 18023 | 135, 139 |
| 18025 | 123, 135, 139 |
| 18026 | 135 |
| 18027 | 141, 147, 155 |
| 18029 | 135, 139, 157 |
| 18030 | 135, 155 |
| 18032 | 135, 155 |
| 18033 | 131, 133, 135, 137, 139, 141, 143, 145, 147, 155, 157 |
| 18034 | 131, 133, 135, 137, 139, 141, 143, 145, 147, 155, 157 |
| 18035 | 135 |
| 18042 | 155, 157 |
| 18044 | 155, 157 |
| 18048 | 135 |
| 18049 | 135, 139 |
| 18055 | 135, 139, 157 |

| | |
|---|---|
| 18056 | 139, 157 |
| 18058 | 123, 139, 145, 151, 157 |
| 18059 | 139, 157 |
| 18100 | 135, 139 |
| 18106 | 135, 137, 139 |
| 18129 | 123, 135, 137, 151, 155 |
| 18206 | 137 |
| 18218 | 135, 137, 139, 155, 157 |
| 18435 | 147 |
| 18500 | 135, 137, 141, 147, 155 |
| 18502 | 135, 139, 145, 157 |
| 18504 | 135, 155 |
| 18511 | 141, 147 |
| 18512 | 141, 147 |
| 18600 | 139 |
| 18700 | 135, 148, 154 |
| 19702 | 143, 145 |
| 19766 | 133, 145 |
| 19772 | 143, 145 |
| 050C | 75 |
| 050D | 75 |
| 050E | 75 |
| 050F | 75 |
| 075ASS | 72 |
| 075BSS | 72 |
| 075C | 75 |
| 075CAP | 75 |
| 075CAP/SS | 72 |
| 075CSS | 72 |
| 075D | 75 |
| 075D3/8 | 75 |
| 075DSS | 72 |
| 075E | 75 |
| 075ESS | 72 |
| 075F | 75 |
| 075FSS | 72 |
| 075PL/SS | 72 |
| 100125CAP | 75 |
| 100125PL | 75 |
| 100A | 75 |
| 100ASS | 72 |
| 100B | 75 |
| 100BSS | 72 |
| 100C | 75 |
| 100CAP/SS | 72 |
| 100CSS | 72 |
| 100D | 75 |
| 100DSS | 72 |
| 100E | 75 |
| 100ESS | 72 |
| 100F | 75 |
| 100FSS | 72 |

| | |
|---|---|
| 100G | 69, 76 |
| 100GV | 69, 73, 76 |
| 100PL/SS | 72 |
| 100RING | 73, 76 |
| 100SHM | 76 |
| 12000A | 103, 105, 107, 99 |
| 12000AV | 103, 105, 107, 99 |
| 12049E | 105, 113, 133 |
| 12055B | 113 |
| 12055E | 105, 133 |
| 12201W | 115 |
| 12202W | 101, 109, 115 |
| 12214A | 125, 153 |
| 125A | 75 |
| 125B | 75 |
| 125C | 75 |
| 125D | 75 |
| 125E | 75 |
| 125F | 75 |
| 12600B | 105, 113, 127 |
| 12702A | 101, 103, 105, 107, 109, 99 |
| 12703A | 103, 105, 107, 111, 113, 99 |
| 12703AW | 115 |
| 12705V | 103, 105, 111, 113 |
| 12707W | 101, 109, 115 |
| 12710V | 103, 105, 111, 113 |
| 12712A | 101, 103, 105, 99 |
| 12712AV | 103 |
| 12713SD | 127, 129 |
| 12713V | 103, 111, 127, 129 |
| 12715A | 105, 107, 111, 113, 127, 129, 131, 133, 143, 145, 99 |
| 12717V | 103, 105, 111, 113 |
| 12719A | 101, 103, 105, 107, 109, 111, 113, 115, 127, 129, 131, 133, 143, 145, 99 |
| 12719AV | 103, 111 |
| 12754V | 103, 105, 111, 113 |
| 12765A | 103, 105, 107, 111, 113, 127, 129, 99 |
| 12774VA | 101, 103, 105, 107, 111, 113, 115, 127, 129, 143, 99 |
| 12775A | 101, 103, 105, 107, 109, 111, 113, 99 |
| 12777SS | 149, 151, 153, 155, 157 |
| 12882A | 111, 117, 119, 121, 127, 131, 149, 99 |
| 12883B | 117, 119 |
| 12902A | 101, 103, 105, 107, 109, 111, 113, 115, 127, 129, 131, 133, 143, 145, 99 |
| 12999A | 103, 105, 107, 99 |
| 12999AV | 103, 105, 107, 99 |
| 13000V | 111, 113 |
| 13777SS | 155, 157 |
| 13778V | 111, 155, 157, 90 |

| | |
|---|---|
| 13999V | 111, 113 |
| 150(200)K | 76 |
| 15000V | 127, 129 |
| 150125A | 75 |
| 150125B | 75 |
| 150125C | 75 |
| 150125D | 75 |
| 150125E | 75 |
| 150125F | 75 |
| 15035E | 101, 109, 115, 131, 133, 137, 143, 145 |
| 150A | 75 |
| 150A90 | 77 |
| 150ASS | 73 |
| 150B | 75 |
| 150BSS | 73 |
| 150C | 75 |
| 150C90 | 77 |
| 150CAP | 75 |
| 150CAP/SS | 73 |
| 150CSS | 73 |
| 150D | 75 |
| 150D90 | 77 |
| 150DSS | 73 |
| 150E | 75 |
| 150ESS | 73 |
| 150F | 75 |
| 150F90 | 77 |
| 150FSS | 73 |
| 150G | 47, 69, 76 |
| 150GV | 47, 69, 73, 76 |
| 150PB | 98 |
| 150PBI | 116 |
| 150PL | 75 |
| 150PL/SS | 73 |
| 150PO | 98 |
| 150POI | 116 |
| 150POICF5/8-4.1 | 116 |
| 150POICF7/8 | 116 |
| 150POICF7/8-4.1 | 116 |
| 150POICF7/8-4.6 | 116 |
| 150RING | 73, 76 |
| 150SHM | 76 |
| 15201W | 131, 133 |
| 15703W | 131, 133 |
| 15999V | 127, 129 |
| 16704A | 141 |
| 16773A | 141 |
| 17000SS | 149, 151, 153 |
| 17002SS | 149, 151, 153 |
| 17004SS | 149 |
| 17008-4.1 | 117, 119 |

| | |
|---|---|
| 17008-4.1SS | 149 |
| 17008-4.6 | 117, 119 |
| 17008-4.6SS | 149 |
| 17008SS | 149, 151, 153 |
| 17009B | 117, 119, 121, 123, 125, 149, 151, 153 |
| 17011SS | 149, 151, 153 |
| 17026SS | 149, 151, 153 |
| 17035SD | 117, 119, 125 |
| 17035SS | 149, 151, 153 |
| 17046SS | 149, 151 |
| 17049A | 125 |
| 17049ASS | 153 |
| 17055A | 125, 153 |
| 17056E | 105, 133 |
| 17100SS | 149 |
| 17130SS | 149, 151, 153 |
| 17200A | 121 |
| 17201A | 121 |
| 17206A | 121 |
| 17408SS | 151 |
| 17446SS | 151 |
| 17600A | 125 |
| 18001SS | 155, 157 |
| 18004SS | 155, 157 |
| 18008SS | 155, 157 |
| 18010SS | 105, 113, 125, 133, 135, 137, 139, 153, 155, 157 |
| 18012SS | 155, 157 |
| 18023-1.125 | 135 |
| 18023-1.125SS | 155 |
| 18023SS | 155, 157 |
| 18025SD | 135, 139 |
| 18025SS | 151, 155, 157 |
| 18026SS | 155 |
| 18048SS | 155 |
| 18049SS | 157 |
| 18055H | 145 |
| 18100SS | 155, 157 |
| 18100W | 137 |
| 18106SS | 155, 157 |
| 18135A | 143 |
| 18135B | 143 |
| 18200A | 137 |
| 18202A | 137 |
| 18203A | 137 |
| 18600SS | 157 |
| 19001H | 145 |
| 19201W | 143, 145 |
| 19703W | 143, 145 |
| 200150C | 75 |
| 200A | 75 |
| 200A90 | 77 |

| | |
|---|---|
| 200ASS | 73 |
| 200B | 75 |
| 200B90 | 77 |
| 200BSS | 73 |
| 200C | 75 |
| 200C90 | 77 |
| 200CAP | 66, 75 |
| 200CAP/SS | 73 |
| 200CAPSH | 66, 75 |
| 200CSS | 73 |
| 200D | 75 |
| 200D90 | 77 |
| 200DSS | 73 |
| 200E | 75 |
| 200ESS | 73 |
| 200F | 75 |
| 200F45 | 77 |
| 200F90 | 77 |
| 200FF | 76 |
| 200FSS | 73 |
| 200G | 47, 69, 76 |
| 200GB | 73 |
| 200GV | 47, 69, 73, 76 |
| 200P6PRO | 98 |
| 200P6PROE | 98 |
| 200P6PROSS | 148 |
| 200P6PROV | 98 |
| 200P6PROW | 100 |
| 200PB | 98 |
| 200PB-SS | 148 |
| 200PB-V | 98 |
| 200PBI | 118 |
| 200PBW | 100 |
| 200PEO | 102 |
| 200PH-5 | 98 |
| 200PH-5E | 98 |
| 200PH-5V | 98 |
| 200PH5-SS | 148 |
| 200PH5W | 100 |
| 200PH6 | 98 |
| 200PHA | 104 |
| 200PHY | 104 |
| 200PHYSS | 152 |
| 200PHYW | 104 |
| 200PI-3 | 118 |
| 200PI6PRO | 118 |
| 200PIH-5 | 118 |
| 200PIH5E | 118 |
| 200PIHA | 124 |
| 200PIHY | 124 |
| 200PL | 75 |
| 200PL/SS | 73 |

| | |
|---|---|
| 200PO | 98 |
| 200PO-SS | 148 |
| 200PO-V | 98 |
| 200POI | 118 |
| 200POICF5/8 | 118 |
| 200POICF7/8 | 118 |
| 200POICF7/8-4.6 | 118 |
| 200POSSCF5/8 | 148 |
| 200POSSCF7/8 | 148 |
| 200SBS | 120, 122, 128, 135, 137, 150 |
| 200SHM | 76 |
| 201B | 75, 76 |
| 201CAPSH | 66 |
| 201FPT | 66 |
| 201PBIW | 120 |
| 201PI6PROW | 120 |
| 201PIH5W | 120 |
| 201POIW | 120 |
| 202CAP | 66 |
| 205PB | 98 |
| 205PB-V | 98 |
| 205PO | 98 |
| 205PO-V | 98 |
| 211FPT | 66 |
| 222PBI | 126 |
| 222PI6PRO | 126 |
| 222PIE5 | 128 |
| 222PIE51 | 128 |
| 222PIH5 | 126 |
| 222PIH5E | 126 |
| 222PIH6 | 126 |
| 222PIHY | 126 |
| 222POI | 126 |
| 225POI | 126 |
| 231MPT | 66 |
| 231MPTBN | 66 |
| 234PE3SS | 150 |
| 234PE51SS | 150 |
| 234PE5SS | 150 |
| 234PIE3 | 122 |
| 234PIE5 | 122 |
| 234PIE51 | 122 |
| 234POI | 122 |
| 234PPE5 | 102 |
| 234PPE51 | 102 |
| 234PPE51V | 102 |
| 234PPE5V | 102 |
| 300A | 76 |
| 300ASS | 73 |
| 300B | 76 |
| 300BSS | 73 |
| 300C | 76 |

| | |
|---|---|
| 300CAP | 76 |
| 300CAP/SS | 73 |
| 300CSS | 73 |
| 300D | 76 |
| 300DSS | 73 |
| 300E | 76 |
| 300ESS | 73 |
| 300F | 76 |
| 300F200F | 76 |
| 300FF | 76 |
| 300FSS | 73 |
| 300G | 47, 69, 76 |
| 300GV | 47, 69, 73, 76 |
| 300K | 76 |
| 300K6 | 73 |
| 300P11PRO | 110 |
| 300P11PROW | 114 |
| 300PB | 110 |
| 300PB-SS | 154 |
| 300PBI | 134 |
| 300PBW | 114 |
| 300PH-6 | 110 |
| 300PH11-SS | 154 |
| 300PH11W | 114 |
| 300PH13SS | 154 |
| 300PH13W | 114 |
| 300PH6W | 114 |
| 300PHY | 112 |
| 300PHYSS | 156 |
| 300PHYW | 112 |
| 300PIH-11 | 134 |
| 300PIH-8 | 134 |
| 300PIH13 | 134 |
| 300PIHY | 138 |
| 300PL | 76 |
| 300PL/SS | 73 |
| 300PO | 110 |
| 300PO-SS | 154 |
| 300PO-SSCF | 154 |
| 300POI | 134 |
| 300SBS | 120, 122, 128, 135, 137, 150 |
| 300SHM | 76 |
| 301PBIW | 136 |
| 301PIH13W | 136 |
| 301POIW | 136 |
| 303B | 76 |
| 303B200A | 76 |
| 303C | 76 |
| 333PBI | 140 |
| 333PIE15 | 140 |
| 333PIH13 | 140 |
| 333POI | 140 |

| | |
|---|---|
| 333POICF | 140, 3 |
| 400A | 76 |
| 400ASS | 73 |
| 400B | 76 |
| 400BSS | 73 |
| 400C | 76 |
| 400CAP | 76 |
| 400CAP/SS | 73 |
| 400CSS | 73 |
| 400D | 76 |
| 400DSS | 73 |
| 400E | 76 |
| 400ESS | 73 |
| 400F | 76 |
| 400FSS | 73 |
| 400G | 76 |
| 400GV | 73, 76 |
| 400PL | 76 |
| 400PL/SS | 73 |
| 400SHM | 76 |
| 444PIH24 | 146 |
| 444POI | 146 |
| 60FDIN | 66 |
| 75A1/2 | 75 |
| 75A1/2/SA | 77 |
| 75A1/4 | 75 |
| 75A1/4/SA | 77 |
| 75A3/4 | 75 |
| 75A3/4/SA | 77 |
| 75A3/8 | 75 |
| 75A3/8/SA | 77 |
| 75B1/2 | 75, 77 |
| 75B3/4 | 75, 77 |
| 75G | 76 |
| 75GV | 73, 76 |
| 75PL | 75 |
| 75SHM | 76 |
| A203V | 109, 131, 133, 145 |
| AF100 | 71 |
| AF100G | 71 |
| AF100GV | 71 |
| AF150 | 71 |
| AF150G | 71 |
| AF150GV | 71 |
| AF200 | 71 |
| AF200G | 71 |
| AF200GV | 71 |
| AF300 | 71 |
| AF300G | 71 |
| AF300GV | 71 |
| AF400 | 71 |
| AF400G | 71 |

| | |
|---|---|
| AF400GV | 71 |
| AFB200 | 71 |
| AFB300 | 71 |
| AFB400 | 71 |
| BANJOMAN | 67, 79 |
| BC090 | 79 |
| BC114 | 79 |
| BEM3 | 123, 151 |
| BEM5 | 123, 151 |
| BEM5-182CZ | 129 |
| BEM51 | 123, 151 |
| BEM51-182CZ | 129 |
| BF075 | 67 |
| BF075BD | 68 |
| BF075BDV | 68 |
| BF100 | 67 |
| BF100BD | 68 |
| BF100GE | 67, 68 |
| BF100GRE | 68 |
| BF100GRV | 68 |
| BF100GV | 67, 68 |
| BF100V | 67 |
| BF107 | 103, 129 |
| BF125 | 67 |
| BF125BDV | 68 |
| BF150 | 67 |
| BF150BD | 68 |
| BF200 | 67 |
| BF200BD | 68 |
| BF200GE | 67, 68 |
| BF200GFV | 68 |
| BF200GV | 67, 68 |
| BF200V | 67 |
| BF207 | 133, 145 |
| BF220 | 67 |
| BF220BD | 68 |
| BF220GE | 67, 68 |
| BF220GV | 67, 68 |
| BF220V | 67 |
| BF300 | 67 |
| BF300BD | 68 |
| BF300GE | 67, 68 |
| BF300GFE | 68 |
| BF300GFV | 68 |
| BF300GV | 67, 68 |
| BW220SWP90SS | 45 |
| CAP050 | 81 |
| CAP075 | 81 |
| CAP100 | 81 |
| CAP125 | 81 |
| CAP150 | 81 |
| CAP200 | 81 |

| | |
|---|---|
| CAP300 | 81 |
| CPLG025 | 80 |
| CPLG038 | 80 |
| CPLG050 | 80 |
| CPLG075 | 80 |
| CPLG100 | 80 |
| CPLG125 | 80 |
| CPLG150 | 80 |
| CPLG200 | 80 |
| CPLG300 | 80 |
| CR025 | 81 |
| CR038 | 81 |
| CR050 | 81 |
| CR075 | 81 |
| CR100 | 81 |
| CR125 | 81 |
| CR150 | 81 |
| CR200 | 81 |
| CTS200AR | 62 |
| CTS200D | 62 |
| CV050 | 16, 3 |
| CV100 | 16 |
| CV100MT | 16 |
| CV10175 | 101, 109, 115, 131, 133, 143, 145 |
| CV221 | 16 |
| CV300 | 16 |
| DB20153M | 54, 55 |
| DB20290 | 54, 55 |
| DM100ABSS | 58 |
| DM100ASS | 58 |
| DM100CAP | 58 |
| DM100DBSS | 58 |
| DM100DBSSE | 58 |
| DM100DBSST | 58 |
| DM100DSS | 58 |
| DM100DSSE | 58 |
| DM100DSST | 58 |
| DM100PL | 58 |
| DM101SS | 58 |
| DM10294A | 58 |
| DM10295A | 58 |
| DM10296 | 58 |
| DM102SSE | 58 |
| DM102SST | 58 |
| DM102SSV | 58 |
| DM150A | 54 |
| DM150AB | 54 |
| DM150ABE | 54 |
| DM150ABSS | 59 |
| DM150ABT | 54 |
| DM150AE | 54 |

| | |
|---|---|
| DM150ASS | 59 |
| DM150AT | 54 |
| DM150D | 54 |
| DM150DB | 54 |
| DM150DBE | 54 |
| DM150DBSS | 59 |
| DM150DBSSE | 59 |
| DM150DBSST | 59 |
| DM150DBT | 54 |
| DM150DE | 54 |
| DM150DSS | 59 |
| DM150DSSE | 59 |
| DM150DSST | 59 |
| DM150DT | 54 |
| DM200A | 55 |
| DM200AB | 55 |
| DM200ABSS | 60 |
| DM200ACAP | 59, 60 |
| DM200ACF | 40 |
| DM200AE | 55 |
| DM200APL | 59, 60 |
| DM200ASS | 60 |
| DM200AT | 55 |
| DM200CAP | 54, 55 |
| DM200D | 55 |
| DM200DB | 55 |
| DM200DBSS | 60 |
| DM200DBSSE | 60 |
| DM200DBSST | 60 |
| DM200DCF | 40 |
| DM200DE | 55 |
| DM200DSS | 60 |
| DM200DSSE | 60 |
| DM200DSST | 60 |
| DM200DT | 55 |
| DM200PL | 54, 55 |
| DM20153F | 54, 55 |
| DM20153M | 54, 55 |
| DM201SS | 59, 60 |
| DM20200A | 54, 55 |
| DM20200D | 54, 55 |
| DM20294A | 54, 55, 59, 60 |
| DM20295A | 54, 55, 59, 60 |
| DM20296 | 54, 55, 59, 60 |
| DM202SSE | 59, 60 |
| DM202SST | 59, 60 |
| DM202SSV | 59, 60 |
| DM220A | 56 |
| DM220ABSS | 61 |
| DM220ASS | 61 |
| DM220CAP | 56, 61 |
| DM220D | 56 |

| | |
|---|---|
| DM220DBSS | 61 |
| DM220DSS | 61 |
| DM220DSSE | 61 |
| DM220DSST | 61 |
| DM220PL | 61 |
| DM221PL | 56 |
| DM221SS | 61 |
| DM222SS | 61 |
| DM25153F | 56 |
| DM25153M | 56 |
| DM25200 | 56 |
| DM25294 | 61 |
| DM25294E | 61 |
| DM25294T | 61 |
| DM300ABFP | 57 |
| DM300ACF | 40 |
| DM300AFP | 57 |
| DM300CAP | 57 |
| DM300DBFP | 57 |
| DM300DCF | 40 |
| DM300DFP | 57 |
| DM300PL | 57 |
| DM35153F | 57 |
| DM35153M | 57 |
| DM35200A | 57 |
| DM35200D | 57 |
| DM35294 | 57 |
| DMMT201A | 55 |
| DMMT201AE | 55 |
| DPCF100 | 53 |
| DPCM100 | 53 |
| DPCMT100 | 53 |
| EL025-90 | 82 |
| EL038-90 | 82 |
| EL050-90 | 82 |
| EL075-90 | 82 |
| EL100-45 | 82 |
| EL100-90 | 82 |
| EL125-90 | 82 |
| EL150-90 | 82 |
| EL200-90 | 82 |
| EL300-90 | 82 |
| EV075 | 19 |
| EV075BL | 23 |
| EV075BLXR1 | 23 |
| EV075SL | 23 |
| EV075SLXR1 | 23 |
| EV075XR1 | 19 |
| EV100BL | 23 |
| EV100BLXR1 | 23 |
| EV100FP | 19 |
| EV100SL | 23 |

| | |
|---|---|
| EV100SLXR1 | 23 |
| EV100XR1 | 19 |
| EV10210 | 19, 23, 28, 30, 31 |
| EV125 | 19 |
| EV125XR1 | 19 |
| EV150 | 20 |
| EV150BL | 24 |
| EV150BLXR1 | 24 |
| EV150SL | 24 |
| EV150SLXR1 | 24 |
| EV150XR1 | 20 |
| EV200 | 20 |
| EV200BL | 24 |
| EV200BLXR1 | 24 |
| EV200SL | 24 |
| EV200SLXR1 | 24 |
| EV200XR1 | 20 |
| EV20210 | 20, 24, 28, 30, 31 |
| EV204BLFP | 25 |
| EV204BLXR1 | 25 |
| EV204FP | 21 |
| EV204SLFP | 25 |
| EV204SLXR1 | 25 |
| EV204XR1 | 21 |
| EV25210 | 21, 25, 28, 30, 31 |
| EV300FP | 22 |
| EV300FP110 | 22 |
| EV300XR1A | 22 |
| EV3300 | 19, 23, 28, 30, 31 |
| EV35210 | 22, 29 |
| EV4300 | 20, 21, 24, 25, 28, 30, 31 |
| EVR075 | 19 |
| EVR100FP | 19 |
| EVR125 | 19 |
| EVR150 | 20 |
| EVR204FP | 21 |
| EVR3300 | 19, 28, 30 |
| EVR4300 | 20, 21, 28, 30 |
| FC100 | 19, 20, 21, 23, 24, 25, 28, 30, 31, 47 |
| FC200 | 47 |
| FC220 | 41, 47 |
| FC220B | 47 |
| FC220TB | 47 |
| FC300 | 41, 47 |
| FC300B | 47 |
| FC300TB | 47 |
| FM100 | 42 |
| GHFT075A | 78 |
| GHFT075D | 78 |
| GHFT075MPT | 78 |
| GHMT075B | 78 |

| | |
|---|---|
| GHMT075F | 78 |
| GHMT075FPT | 78 |
| GHMT075MPT | 78 |
| GHN075 | 78 |
| HB025 | 83 |
| HB025-038 | 83 |
| HB025-038SS | 83 |
| HB025-050 | 83 |
| HB025-050SS | 83 |
| HB025-90 | 83 |
| HB025/038-90 | 83 |
| HB025/050-90 | 83 |
| HB025SS | 83 |
| HB038 | 83 |
| HB038-025 | 83 |
| HB038-050 | 83 |
| HB038-050SS | 83 |
| HB038-90 | 83 |
| HB038SS | 83 |
| HB050 | 83 |
| HB050-025 | 83 |
| HB050-038 | 83 |
| HB050-058SS | 83 |
| HB050-075 | 83 |
| HB050-075SS | 83 |
| HB050-90 | 83 |
| HB050/038-90 | 83 |
| HB050/075-90 | 83 |
| HB050SS | 83 |
| HB075 | 83 |
| HB075-038 | 83 |
| HB075-050 | 83 |
| HB075-050SS | 83 |
| HB075-058 | 83 |
| HB075-100 | 83 |
| HB075-100SS | 83 |
| HB075-90 | 83 |
| HB075/050-90 | 83 |
| HB075/100-90 | 83 |
| HB075SS | 83 |
| HB100 | 83 |
| HB100-075 | 83 |
| HB100-075SS | 83 |
| HB100-125 | 83 |
| HB100-90 | 83 |
| HB100/075-90 | 83 |
| HB100/125-90 | 83 |
| HB100SS | 83 |
| HB125 | 83 |
| HB125-075 | 83 |
| HB125-100 | 83 |
| HB125-150 | 83 |

| | |
|---|---|
| HB125-90 | 83 |
| HB125/100-90 | 83 |
| HB125/150-90 | 83 |
| HB125SS | 83 |
| HB150 | 83 |
| HB150-100 | 83 |
| HB150-125 | 83 |
| HB150-200 | 83 |
| HB150-90 | 83 |
| HB150/125-90 | 83 |
| HB150SS | 83 |
| HB200 | 83 |
| HB200-150 | 83 |
| HB200-90 | 83 |
| HB200/150-90 | 83 |
| HB200SS | 83 |
| HB300 | 83 |
| HB300-90 | 83 |
| HB300SS | 83 |
| HB400 | 83 |
| HBB20012590 | 82 |
| HBC050075 | 81 |
| HBEL100-90 | 82 |
| HBEL150/100-90 | 82 |
| HBF075 | 83 |
| HBF075-100 | 83 |
| HBF100 | 83 |
| HBT025 | 84 |
| HBT038 | 84 |
| HBT050 | 84 |
| HBT050-038 | 84 |
| HBT050-075 | 84 |
| HBT075 | 84 |
| HBT075-050 | 84 |
| HBT075-050SS | 3, 84 |
| HBT075-100 | 84 |
| HBT100 | 84 |
| HBT100-075 | 84 |
| HBT100-100 | 84 |
| HBT150-100 | 84 |
| HBT150-150 | 84 |
| HBT200 | 84 |
| HBT300 | 84 |
| HM025 | 84 |
| HM038 | 84 |
| HM050 | 84 |
| HM075 | 84 |
| HM100 | 84 |
| HM125 | 84 |
| HM150 | 84 |
| HM200 | 84 |
| HM300 | 84 |

| | |
|---|---|
| HSV1000 | 104, 112, 124, 132, 138, 144, 152, 156 |
| HV200 | 40 |
| HY1001 | 139 |
| HY1003 | 105, 125 |
| HY1012 | 139, 145, 157 |
| HY1013 | 105, 113, 125, 133, 153 |
| LEV025PL | 18 |
| LEV025PLST | 18 |
| LEV038 | 18 |
| LEV038PL | 18 |
| LEV038PLST | 18 |
| LEV050 | 18 |
| LEV050PL | 18 |
| LS050-20 | 91 |
| LS050-40 | 91 |
| LS050-60 | 91 |
| LS050-80 | 91 |
| LS050-B | 92 |
| LS050B/C1 | 92 |
| LS075-20 | 91 |
| LS075-40 | 91 |
| LS075-60 | 91 |
| LS075-80 | 91 |
| LS075-B | 92 |
| LS075-C1 | 92 |
| LS075-G | 92 |
| LS075-GV | 92 |
| LS075B/C1 | 92 |
| LS100-20 | 91 |
| LS100-40 | 91 |
| LS100-80 | 91 |
| LS100-B | 92 |
| LS100-C1 | 49, 92 |
| LS100-G | 49, 92 |
| LS100-GV | 92 |
| LS100B/C1 | 92 |
| LS120 | 49, 92 |
| LS125-20 | 91 |
| LS125-40 | 91 |
| LS125-80 | 91 |
| LS125-B | 92 |
| LS125B/C1 | 92 |
| LS140 | 49, 92 |
| LS150 | 49 |
| LS150-06 | 93 |
| LS150-12 | 93 |
| LS150-120 | 93 |
| LS150-20 | 93 |
| LS150-30 | 93 |
| LS150-50 | 93 |
| LS150-80 | 93 |
| LS150-B | 94 |
| LS150-C | 49, 94 |
| LS150-G | 49, 94 |
| LS150-GV | 49, 94 |
| LS150B/C | 94 |
| LS180 | 49, 92 |
| LS200-06 | 93 |
| LS200-100 | 93 |
| LS200-12 | 93 |
| LS200-120 | 93 |
| LS200-20 | 93 |
| LS200-30 | 93 |
| LS200-50 | 93 |
| LS200-80 | 93 |
| LS200-B | 94 |
| LS200B/C | 94 |
| LS206 | 49, 90, 94 |
| LS2100 | 49, 94 |
| LS212 | 49, 90, 94 |
| LS2120 | 49, 90, 94 |
| LS212P | 94 |
| LS220 | 49, 90, 94 |
| LS220P | 94 |
| LS230 | 49, 90, 94 |
| LS250 | 49, 90, 94 |
| LS250P | 94 |
| LS280 | 49, 90, 94 |
| LS300EC | 51, 95 |
| LS304 | 51, 95 |
| LS308 | 51, 95 |
| LS312 | 51, 95 |
| LS320 | 51, 95 |
| LS350 | 51, 95 |
| LS720 | 92 |
| LS740 | 92 |
| LS760 | 92 |
| LS780 | 92 |
| LSM300-04 | 95 |
| LSM300-08 | 95 |
| LSM300-12 | 95 |
| LSM300-20 | 95 |
| LSM300-50 | 95 |
| LSQ150-06 | 89 |
| LSQ150-12 | 89 |
| LSQ150-120 | 89 |
| LSQ150-20 | 89 |
| LSQ150-30 | 89 |
| LSQ150-50 | 89 |
| LSQ150-80 | 89 |
| LSQ150-B | 90 |
| LSQ200-06 | 89 |
| LSQ200-12 | 89 |
| LSQ200-120 | 89 |
| LSQ200-20 | 89 |
| LSQ200-30 | 89 |
| LSQ200-50 | 89 |
| LSQ200-80 | 89 |
| LSQ200-B | 90 |
| LSQ200-C | 90 |
| LSQ200-G | 90 |
| LSQ200-GV | 90 |
| LSQ200-PL | 49, 51, 88, 90, 94 |
| LSQ200-R | 49, 51 |
| LSQ200-RV | 88, 90, 94 |
| LSS300-B | 95 |
| LSS300-BC | 95 |
| LSS300-C | 95 |
| LSS300-G | 95 |
| LSS300-GV | 95 |
| LSS300-H | 95 |
| LSS300-S | 95 |
| LSS300-SV | 95 |
| LSS306 | 95 |
| LSS308 | 95 |
| LSS312 | 95 |
| LSS320 | 95 |
| LSS330 | 95 |
| LSS350 | 95 |
| LST075-100 | 87 |
| LST075-16 | 87 |
| LST075-30 | 87 |
| LST075-50 | 87 |
| LST075-80 | 87 |
| LST075-H | 88 |
| LST075-HB | 88 |
| LST100-100 | 87 |
| LST100-16 | 87 |
| LST100-30 | 87 |
| LST100-50 | 87 |
| LST100-80 | 87 |
| LST100-B | 49, 88 |
| LST100-G | 49, 88 |
| LST100-GV | 49, 88 |
| LST100-H | 88 |
| LST100-HB | 88 |
| LST1100 | 49, 88 |
| LST116 | 49, 88 |
| LST125-100 | 87 |
| LST125-16 | 87 |
| LST125-30 | 87 |
| LST125-50 | 87 |
| LST125-80 | 87 |
| LST125-H | 88 |
| LST125-HB | 88 |

| | |
|---|---|
| LST130 | 49, 88 |
| LST150 | 49, 88 |
| LST150-100 | 87 |
| LST150-16 | 87 |
| LST150-30 | 87 |
| LST150-50 | 87 |
| LST150-80 | 87 |
| LST150-B | 49, 88 |
| LST150-G | 49, 88 |
| LST150-GV | 49, 88 |
| LST150-H | 88 |
| LST150-HB | 88 |
| LST15100 | 49, 88 |
| LST1516 | 49, 88 |
| LST1530 | 49, 88 |
| LST1550 | 49, 88 |
| LST1580 | 49, 88 |
| LST180 | 49, 88 |
| LST200-04SS | 89 |
| LST200-06SS | 89 |
| LST200-100SS | 89 |
| LST200-10SS | 89 |
| LST200-16SS | 89 |
| LST200-30SS | 89 |
| LST200-50SS | 89 |
| LST200-80SS | 89 |
| LST200-B | 90 |
| LST200-GV | 90 |
| LST200-HBSS | 90 |
| LST200-HSS | 90 |
| LST204SS | 51, 90 |
| LST206SS | 51, 90 |
| LST208SS | 51, 90 |
| LST2100SS | 51, 90 |
| LST210SS | 51, 90 |
| LST216SS | 51, 90 |
| LST230SS | 51, 90 |
| LST250SS | 51, 90 |
| LST280SS | 51, 90 |
| LST5100 | 86 |
| LST530 | 86 |
| LST550 | 86 |
| LST580 | 86 |
| LSTM050-100 | 2, 85 |
| LSTM050-100C | 2, 85 |
| LSTM050-30 | 2, 85 |
| LSTM050-30C | 2, 85 |
| LSTM050-50 | 2, 85 |
| LSTM050-50C | 2, 85 |
| LSTM050-80 | 2, 85 |
| LSTM050-80C | 2, 85 |
| LSTM050B | 86 |

| | |
|---|---|
| LSTM050BC | 86 |
| LSTM050G | 86 |
| LSTM050H | 86 |
| LSTM075-100 | 2, 85 |
| LSTM075-100C | 2, 85 |
| LSTM075-30 | 2, 85 |
| LSTM075-30C | 2, 85 |
| LSTM075-50 | 2, 85 |
| LSTM075-50C | 2, 85 |
| LSTM075-80 | 2, 85 |
| LSTM075-80C | 2, 85 |
| LV025MTV | 5 |
| LV025V | 5 |
| LV038050MTV | 5 |
| LV038MTV | 5 |
| LV038V | 5 |
| LV050100MTV | 5 |
| LV050MTV | 5 |
| LV050SLV | 5 |
| LV050V | 5 |
| LVHB025V | 5 |
| LVHB038050MTV | 5 |
| LVHB038V | 5 |
| LVHB050V | 5 |
| LVHB075100MTV | 5 |
| LVHB075MTV | 5 |
| LVHB075V | 5 |
| LVPL025V | 5 |
| LVPL038V | 5 |
| LVPL050V | 5 |
| M100050FPT | 46 |
| M100075BRB | 46 |
| M100075BRB90 | 47 |
| M100075FPT | 46 |
| M100075MPT | 46 |
| M100100HBT | 47 |
| M100125BRB | 46 |
| M100125BRB90 | 47 |
| M100125BRBSWP90 | 43 |
| M100125BRBSWPG90 | 43 |
| M100125HBT | 47 |
| M100125MPT | 46 |
| M100150BRB90 | 47 |
| M100A | 46 |
| M100BRB | 46 |
| M100BRB45 | 47 |
| M100BRB90 | 47 |
| M100BRBSWP90 | 43 |
| M100BRBSWPG90 | 43 |
| M100BSP | 46 |
| M100CPG | 45 |
| M100CPG45 | 45 |

| | |
|---|---|
| M100CPG90 | 45 |
| M100CR | 47 |
| M100FPT | 46 |
| M100G | 47 |
| M100GV | 47 |
| M100MPT | 46 |
| M100MPTSS | 46 |
| M100PA | 44 |
| M100PAC | 44 |
| M100PAT | 44 |
| M100PLG | 46 |
| M100PLG025 | 46 |
| M100PLG050 | 46 |
| M100SWFSS | 44 |
| M100SWP90 | 43 |
| M100SWPG90 | 43 |
| M100TEE | 45 |
| M101G | 47 |
| M101GSA | 44 |
| M101TEE | 45 |
| M104SWFSS | 44 |
| M12712 | 107, 109 |
| M13712 | 115 |
| M15712 | 131, 133 |
| M17000 | 119 |
| M17002 | 119 |
| M18008 | 135 |
| M18012 | 135 |
| M19712X | 143, 145 |
| M200100BRB | 46 |
| M200100BRB90 | 47 |
| M200100CPG | 45 |
| M200100TEE | 45 |
| M200125BRB | 46 |
| M200125BRB90 | 47 |
| M200125MPT | 46 |
| M200125MPTSS | 46 |
| M200150BRB | 46 |
| M200150BRB45 | 47 |
| M200150BRB90 | 47 |
| M200150MPT | 46 |
| M200150MPTSS | 46 |
| M200A | 46 |
| M200BRB | 46 |
| M200BRB45 | 47 |
| M200BRB90 | 47 |
| M200BSP | 46 |
| M200CPG | 45 |
| M200CPG45 | 45 |
| M200CPG90 | 45 |
| M200CPG90SH | 45 |
| M200CR | 47 |

| | |
|---|---|
| M200FPT | 46 |
| M200MPT | 46 |
| M200MPTSS | 46 |
| M200PLG | 46 |
| M200PLG025 | 46 |
| M200PLG038 | 46 |
| M200PLG050 | 46 |
| M200PLG075 | 46 |
| M200PLG100 | 46 |
| M200SWFSS | 44 |
| M200SWP90 | 43 |
| M200TEE | 45 |
| M200YG45 | 45 |
| M201G | 47 |
| M220100BRB | 46 |
| M220100CPG | 45 |
| M220100TEE | 45 |
| M220125BRB | 46 |
| M220150BRB | 46 |
| M220150BRB90 | 47 |
| M220150MPTSS | 46 |
| M220200CPG | 45 |
| M220200HBT | 47 |
| M220200SWP90 | 43 |
| M220200TEE | 45 |
| M220250BRB | 46 |
| M220375SWFSS | 44 |
| M220A | 46 |
| M220ASWP90 | 43 |
| M220BRB | 46 |
| M220BRB45 | 47 |
| M220BRB90 | 47 |
| M220BRBSWP90 | 43 |
| M220BSP | 46 |
| M220BWASS | 45 |
| M220CPG | 45 |
| M220CPG45 | 41, 45 |
| M220CPG6 | 41, 45 |
| M220CPG90 | 45 |
| M220CR | 47 |
| M220D | 46 |
| M220FPT | 46 |
| M220MPT | 46 |
| M220MPTSS | 46 |
| M220MPTSWP90 | 43 |
| M220P6PRO | 106 |
| M220P6PROE | 106 |
| M220P6PROEW | 108 |
| M220P6PROW | 108 |
| M220PB | 106 |
| M220PBW | 108 |
| M220PH5 | 106 |

| | |
|---|---|
| M220PH5E | 106 |
| M220PH5EW | 108 |
| M220PH5W | 108 |
| M220PH6 | 106 |
| M220PH6W | 108 |
| M220PLG | 46 |
| M220PLG038 | 46 |
| M220PLG075 | 46 |
| M220PO | 106 |
| M220SWFSS | 44 |
| M220SWP90 | 43 |
| M220SWP90SS | 43 |
| M220TEE | 45 |
| M220Y45 | 41, 45 |
| M220YG45 | 41, 45 |
| M221G | 41, 47 |
| M221GSA | 44 |
| M222PBIW | 130 |
| M222PIE51W | 130 |
| M222PIE5W | 130 |
| M222PIH6W | 130 |
| M222PIHYW | 132 |
| M300200CPG | 45 |
| M300220BRB | 46 |
| M300220BRB90 | 47 |
| M300220CPG | 41, 45 |
| M300220MPTSS | 46 |
| M300300HBT | 47 |
| M300375SWFSS | 44 |
| M300A | 46 |
| M300ASWP90 | 43 |
| M300BRB | 46 |
| M300BRB45 | 47 |
| M300BRB90 | 47 |
| M300BRBSWP90 | 43 |
| M300BSP | 46 |
| M300CPG | 45 |
| M300CPG45 | 41, 45 |
| M300CPG7 | 41, 45 |
| M300CPG90 | 45 |
| M300CR | 47 |
| M300FPT | 46 |
| M300MPT | 46 |
| M300MPTSS | 46 |
| M300MPTSWP90 | 43 |
| M300P11PRO | 110 |
| M300P11PROW | 114 |
| M300P6PRO | 110 |
| M300PB | 110 |
| M300PBW | 114 |
| M300PH11W | 114 |
| M300PH6 | 110 |

| | |
|---|---|
| M300PH6W | 114 |
| M300PLG | 46 |
| M300PLG075 | 46 |
| M300PLG100 | 46 |
| M300PO | 110 |
| M300SWFSS | 44 |
| M300SWP90 | 43 |
| M300SWPG90 | 43 |
| M300TEE | 45 |
| M300Y45 | 41, 45 |
| M300YG45 | 41, 45 |
| M301G | 41, 47 |
| M301GSA | 44 |
| M303D | 46 |
| M332PBIW | 142 |
| M332PIE101W | 142 |
| M332PIE10W | 142 |
| M332PIH13W | 142 |
| M332PIHYW | 144 |
| M332POIW | 142 |
| MBF100 | 52 |
| MBF100BD | 52 |
| MBF100BDV | 52 |
| MBF100V | 52 |
| MBF150200BD | 52 |
| MBF200 | 52 |
| MBF200BD | 52 |
| MBF200V | 52 |
| MBF220 | 52 |
| MBF220BD | 52 |
| MBF220V | 52 |
| MBF300 | 52 |
| MBF300BD | 52 |
| MBF300BDV | 52 |
| MBF300V | 52 |
| MBP200 | 64 |
| MCV100 | 44 |
| MCV200 | 44 |
| MCV221 | 44 |
| MCV300 | 44 |
| MEV100BLCF | 31 |
| MEV100BLXR1 | 31 |
| MEV100CF | 28 |
| MEV100SLCF | 30 |
| MEV100SLXR1 | 30 |
| MEV100XR1 | 28 |
| MEV102CF | 26 |
| MEV103CF | 26 |
| MEV104CF | 26 |
| MEV105CF | 26 |
| MEV200BLCF | 31 |
| MEV200BLXR1 | 31 |

| | |
|---|---|
| MEV200CF | 28 |
| MEV200SLCF | 30 |
| MEV200SLXR1 | 30 |
| MEV200XR1 | 28 |
| MEV220BLCF | 31 |
| MEV220BLXR1 | 31 |
| MEV220CF | 28 |
| MEV220SLCF | 30 |
| MEV220SLXR1 | 30 |
| MEV220XR1 | 28 |
| MEV225H | 3, 33 |
| MEV300CF | 29 |
| MEV300XR1A | 29 |
| MEVR100CF | 28 |
| MEVR100SLCF | 30 |
| MEVR200CF | 28 |
| MEVR200SLCF | 30 |
| MEVR220CF | 28 |
| MEVR220SLCF | 30 |
| MFM100 | 42 |
| MFM220 | 42 |
| MFM300 | 42 |
| MHV200 | 40 |
| MHV220A | 40, 41 |
| MIS220 | 41 |
| MIS300 | 41 |
| MLEV100 | 27 |
| MLS100-20 | 48 |
| MLS100-40 | 48 |
| MLS100-50 | 48 |
| MLS100-80 | 48 |
| MLS100B | 49 |
| MLS100BC | 49 |
| MLS200-06 | 48 |
| MLS200-100 | 48 |
| MLS200-12 | 48 |
| MLS200-120 | 48 |
| MLS200-20 | 48 |
| MLS200-30 | 48 |
| MLS200-50 | 48 |
| MLS200-50M | 48 |
| MLS200-80 | 48 |
| MLS200B | 49 |
| MLS200BC | 49 |
| MLS2100SS | 51 |
| MLS220C1 | 51 |
| MLS220G1 | 51 |
| MLS220R1 | 51 |
| MLS222-04 | 50 |
| MLS222-06 | 50 |
| MLS222-08 | 50 |
| MLS222-10 | 50 |

| | |
|---|---|
| MLS222-100 | 50 |
| MLS222-16 | 50 |
| MLS222-30 | 50 |
| MLS222-50 | 50 |
| MLS222-80 | 50 |
| MLS222B | 51 |
| MLS222BC | 51 |
| MLS250SS | 51 |
| MLS280SS | 51 |
| MLS300-08 | 50 |
| MLS300-12 | 50 |
| MLS300-20 | 50 |
| MLS300-50 | 50 |
| MLS300B | 51 |
| MLS300B1 | 95 |
| MLS300CAP | 51, 95 |
| MLS300ECG | 51, 95 |
| MLS300ECGV | 51, 95 |
| MLS300G | 51, 95 |
| MLS300GV | 51, 95 |
| MLST100-100 | 48 |
| MLST100-16 | 48 |
| MLST100-30 | 48 |
| MLST100-50 | 48 |
| MLST100-80 | 48 |
| MLST100-H | 49 |
| MLST100-HB | 49 |
| MLST150-100 | 48 |
| MLST150-16 | 48 |
| MLST150-30 | 48 |
| MLST150-50 | 48 |
| MLST150-80 | 48 |
| MLST150-H | 49 |
| MLST150-HB | 49 |
| MLSTM100-100 | 2 |
| MLSTM100-100C | 2 |
| MLSTM100-30 | 2 |
| MLSTM100-30C | 2 |
| MLSTM100-50 | 2 |
| MLSTM100-50C | 2 |
| MLSTM100-80 | 2 |
| MLSTM100-80C | 2 |
| MLV100V | 5 |
| MPRV100-100 | 39 |
| MPRV100-125 | 39 |
| MSUV100FP | 15 |
| MSW220 | 44 |
| MTF220BD | 52 |
| MTF300BD | 52 |
| MV100BL | 38 |
| MV100CF | 32 |
| MV100SL | 39 |

| | |
|---|---|
| MV200BL | 38 |
| MV200CF | 32 |
| MV200SL | 39 |
| MV220BL | 38 |
| MV220CF | 32 |
| MV220SL | 39 |
| MV225CF | 33 |
| MV300 | 32 |
| MV300BL | 38 |
| MV300CF | 32 |
| MV301CF | 41 |
| MVE004 | 19, 20, 21, 23, 24, 25, 28, 30, 31 |
| MVS220CF | 34, 41 |
| MVS220FP | 34 |
| MVS220HSFP | 35 |
| MVS220SS | 35 |
| MVS300CF | 36 |
| MVS300CFFP | 36 |
| MVS300HSFP | 37 |
| MVSF220FP | 34 |
| MVSF220HSFP | 35 |
| MVSF220SS | 35 |
| MVSF300 | 36 |
| MVSF300FP | 36 |
| MVSF300HSFP | 37 |
| MVSMT220FP | 34 |
| MVSMT220HSFP | 35 |
| MVSMT220SS | 35 |
| MVSMT300 | 36 |
| MVSMT300HSFP | 37 |
| NIP025-SH | 80 |
| NIP038-SH | 80 |
| NIP050-3 | 80 |
| NIP050-SH | 80 |
| NIP075-4 | 80 |
| NIP075-6 | 80 |
| NIP075-SH | 80 |
| NIP100-4 | 80 |
| NIP100-6 | 80 |
| NIP100-SH | 80 |
| NIP125-4 | 80 |
| NIP125-6 | 80 |
| NIP125-SH | 80 |
| NIP150-3 | 80 |
| NIP150-4 | 80 |
| NIP150-5 | 80 |
| NIP150-6 | 80 |
| NIP150-SH | 80 |
| NIP200-4 | 80 |
| NIP200-6 | 80 |
| NIP200-SH | 80 |

| | |
|---|---|
| NIP2101 | 64 |
| NIP300-4 | 80 |
| NIP300-6 | 80 |
| NIP300-SH | 80 |
| NIP400-SH | 80 |
| PLUG025 | 81 |
| PLUG038 | 81 |
| PLUG050 | 81 |
| PLUG075 | 41, 81 |
| PLUG075S | 90 |
| PLUG100 | 81 |
| PLUG125 | 81 |
| PLUG150 | 81 |
| PLUG200 | 81 |
| PLUG300 | 81 |
| PRC200 | 2, 97 |
| PV075 | 16 |
| PV075V | 16 |
| PV100 | 16 |
| PV100-075 | 16 |
| PV100-075B | 16 |
| PV100-075BV | 16 |
| PV100-075V | 16 |
| PV100V | 16 |
| PV10265 | 16 |
| PV10265V | 16 |
| RB038-025 | 80 |
| RB050-025 | 80 |
| RB050-038 | 80 |
| RB075-018 | 80 |
| RB075-025 | 80 |
| RB075-038 | 80 |
| RB075-050 | 80 |
| RB100-025 | 80 |
| RB100-050 | 80 |
| RB100-075 | 80 |
| RB125-075 | 80 |
| RB125-100 | 80 |
| RB150-075 | 80 |
| RB150-100 | 80 |
| RB150-125 | 80 |
| RB200-075 | 80 |
| RB200-100 | 80 |
| RB200-125 | 80 |
| RB200-150 | 80 |
| RB300-150 | 80 |
| RB300-200 | 80 |
| RB400-300 | 80 |
| RC100-075 | 80 |
| RC150-100 | 80 |
| RC150-125 | 80 |
| RC200-050 | 80 |

| | |
|---|---|
| RC200-100 | 80 |
| RC200-125 | 80 |
| RC200-150 | 80 |
| RC300-200 | 80 |
| RN050-038 | 80 |
| RN075-050 | 80 |
| RN100-050 | 80 |
| RN100-075 | 80 |
| RN125-075 | 80 |
| RN125-100 | 80 |
| RN150-100 | 80 |
| RN150-125 | 80 |
| RN200-125 | 80 |
| RN200-150 | 80 |
| RN300-200 | 80 |
| RS21 | 84 |
| RSTB | 84 |
| SL025-90 | 82 |
| SL038-90 | 82 |
| SL050-90 | 82 |
| SL075-45 | 82 |
| SL075-90 | 82 |
| SL100-45 | 82 |
| SL100-90 | 82 |
| SL125-45 | 82 |
| SL125-90 | 82 |
| SL150-45 | 82 |
| SL150-90 | 82 |
| SL200-45 | 82 |
| SL200-90 | 82 |
| SL300-45 | 82 |
| SL300-90 | 82 |
| ST200 | 65 |
| ST300 | 65 |
| SUV050FP | 15 |
| SUV075FP | 15 |
| SUV100FP | 15 |
| SUV125FP | 15 |
| SUV150FP | 15 |
| SUV200FP | 15 |
| SW100 | 84 |
| SW150 | 84 |
| SW220 | 84 |
| TA283 | 66 |
| TA283QD | 66 |
| TC120 | 79 |
| TC130 | 79 |
| TC150 | 79 |
| TC162 | 79 |
| TC181 | 79 |
| TC193 | 79 |
| TC206 | 79 |

| | |
|---|---|
| TC218 | 79 |
| TC224 | 79 |
| TC231 | 79 |
| TC250 | 79 |
| TC287 | 79 |
| TC312 | 79 |
| TC331 | 79 |
| TC343 | 79 |
| TC425 | 79 |
| TC438 | 79 |
| TC456 | 79 |
| TEE025 | 81 |
| TEE038 | 81 |
| TEE050 | 81 |
| TEE075 | 81 |
| TEE100 | 81 |
| TEE125 | 81 |
| TEE150 | 81 |
| TEE200 | 81 |
| TEE300 | 81 |
| TEG075 | 81 |
| TEG100 | 81 |
| TF038SS | 69 |
| TF050 | 69 |
| TF050SS | 69 |
| TF075 | 69 |
| TF075SS | 69 |
| TF075V | 69 |
| TF100 | 69 |
| TF100AV | 70 |
| TF100SS | 69 |
| TF125 | 69 |
| TF125AV | 70 |
| TF125SS | 69 |
| TF138GV | 69 |
| TF150 | 69 |
| TF150AV | 70 |
| TF150SS | 69 |
| TF200 | 69 |
| TF200AV | 70 |
| TF200SS | 69 |
| TF200V | 69 |
| TF220 | 69 |
| TF220G | 69 |
| TF220GV | 69 |
| TF220SS | 69 |
| TF300 | 69 |
| TF300G | 69 |
| TF300GV | 69 |
| TF300SS | 69 |
| TF400 | 69 |
| TF400G | 69 |

| | |
|---|---|
| TF400GV | 69 |
| TL600C | 65 |
| TL650E | 65 |
| TL650S | 65 |
| TL651S | 65 |
| TL652E | 65 |
| TL652S | 65 |
| TL6531 | 66 |
| TLA10 | 65 |
| TLV1 | 65 |
| TLV10R | 65 |
| TLV2 | 65 |
| TLVA10 | 65 |
| TM075/050 | 84 |
| UB100 | 45 |
| UB202 | 45 |
| UB220 | 45 |
| UV050FP | 15 |
| UV075FP | 15 |
| UV100FP | 15 |
| UV125FP | 15 |
| UV150FP | 15 |
| UV15163 | 101, 105, 109, 115, 117, 119, 121, 123, 125, 131, 133, 135, 137, 139, 143, 145, 151, 49, 99 |
| UV15163V | 103, 149, 151, 153, 155, 157, 88 |
| UV200FP | 15 |
| UV204FPFD | 64 |
| V050 | 6 |
| V07018 | 101, 103, 105, 107, 109, 111, 113, 115, 99 |
| V07019 | 101, 103, 105, 107, 109, 111, 113, 115, 99 |
| V075 | 6 |
| V075BL | 13 |
| V075SL | 13 |
| V100 | 6 |
| V100BL | 13 |
| V100FP | 6 |
| V100SL | 13 |
| V10117 | 131, 145 |
| V10118 | 117, 119, 121, 123, 125, 127, 129, 131, 133, 143, 145, 149, 151, 153 |
| V10119 | 103, 117, 119, 121, 123, 125, 127, 143, 149, 151, 153 |
| V10153138 | 6 |
| V10153138BL | 6 |
| V10161 | 14 |
| V10264 | 147 |
| V10270 | 6 |
| V10271 | 6 |
| V125 | 6 |
| V125BL | 13 |
| V125FP | 6 |
| V125SL | 13 |
| V150 | 6 |
| V150BL | 13 |
| V150SL | 13 |
| V200 | 6 |
| V20011SS | 141, 147 |
| V20018 | 103, 105, 113, 123, 125, 129, 133, 135, 137, 139, 141, 147, 151, 153, 155, 157 |
| V20019 | 129, 135, 137, 139, 155, 157 |
| V200BL | 13 |
| V200FP | 7 |
| V200SL | 13 |
| V20153138 | 6 |
| V20153138BL | 6 |
| V20207 | 66, 76 |
| V204FP | 8 |
| V25153138 | 6 |
| V25153138BL | 6 |
| V25270 | 6, 7 |
| V25271 | 6, 7 |
| V300 | 7 |
| V300FP | 7 |
| V400 | 7 |
| VA150 | 14 |
| VA200 | 14 |
| VA200FP | 14 |
| VC200 | 70 |
| VC230 | 70 |
| VC300 | 70 |
| VC330 | 70 |
| VE5630 | 22, 29 |
| VE5793 | 22 |
| VFMT200FP | 7 |
| VFMT204FP | 8 |
| VL20153 | 6 |
| VL25153 | 7 |
| VN100 | 14 |
| VS204FP | 10 |
| VSF200 | 9 |
| VSF200CF | 34 |
| VSF200FPAF | 8 |
| VSF204FP | 10 |
| VSF300 | 11 |
| VSFHB200 | 9 |
| VSFMT200 | 9 |
| VSFMT204FP | 10 |
| VSFMT204HSFP | 10 |
| VSFMT220SS | 35 |
| VSFMT300 | 11 |
| VSFMT300FP | 12 |
| VSFMT300HSFP | 12 |
| VSMT200 | 9 |
| VSMT200CF | 34 |
| VSMT200DPC | 2 |
| VSMT200FPAF | 8 |
| VSMT204FP | 10 |
| VSMT300 | 11 |
| VSS025 | 16 |
| VSS038 | 16 |
| VSS050 | 16 |
| VSS075 | 16 |
| VSS100 | 16 |
| VSS125 | 16 |
| VSS150 | 16 |
| VSS200 | 16 |
| VSS300 | 16 |
| W230237 | 62 |
| W230238 | 62 |
| W230239 | 62 |
| W230240 | 62 |
| WSF210FSA | 63 |
| WSF210FSAV | 63 |
| WSMT210FSA | 63 |
| WSMT210FSAV | 63 |

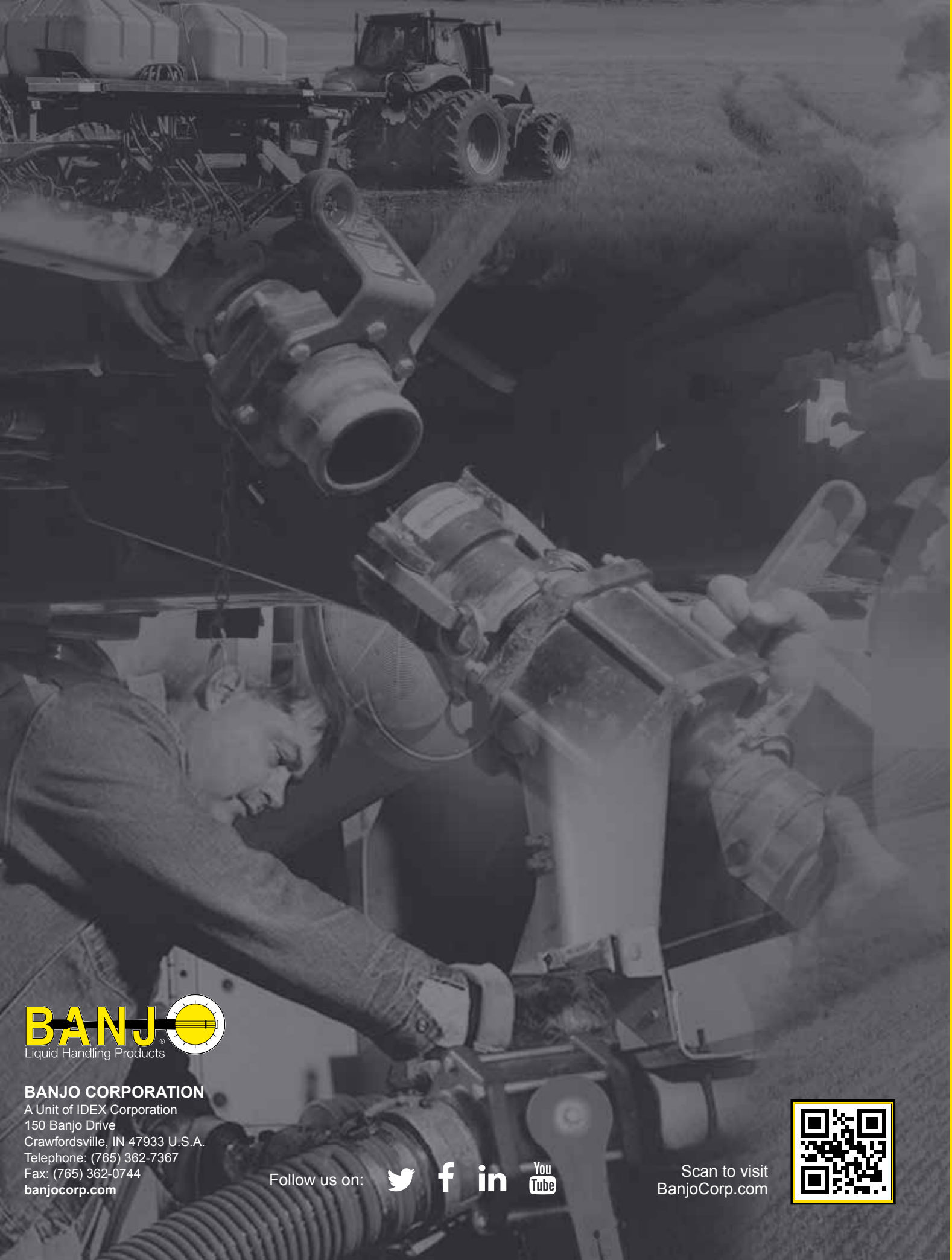

CATALOG #58 2017 BANJO LIQUID HANDLING PRODUCTS

BANJO®
Liquid Handling Products

**BANJO CORPORATION**
A Unit of IDEX Corporation
150 Banjo Drive
Crawfordsville, IN 47933 U.S.A.
Telephone: (765) 362-7367
Fax: (765) 362-0744
**banjocorp.com**

Follow us on:

Scan to visit
BanjoCorp.com