CATALOG #64 2023
BANJO LIQUID HANDLING PRODUCTS
CONNECT WITH CONFIDENCE™
CATALOG #64 EFFECTIVE OCTOBER 1, 2022
2023
BANJO®
Liquid Handling Products
IDEX

INDEX

PRODUCTS FOCUS	4
VALVES	5-16
ELECTRIC VALVES	17-22
MANIFOLD FLANGE CONNECTIONS	23-50
DRY-MATES®	51-60
IBC/TANK ACCESSORIES	61-69
CAM LEVER COUPLINGS	70-75
PIPE FITTINGS	76-81
LINE STRAINERS	82-93
CENTRIFUGAL PUMPS	94-151
REFERENCE	152-163

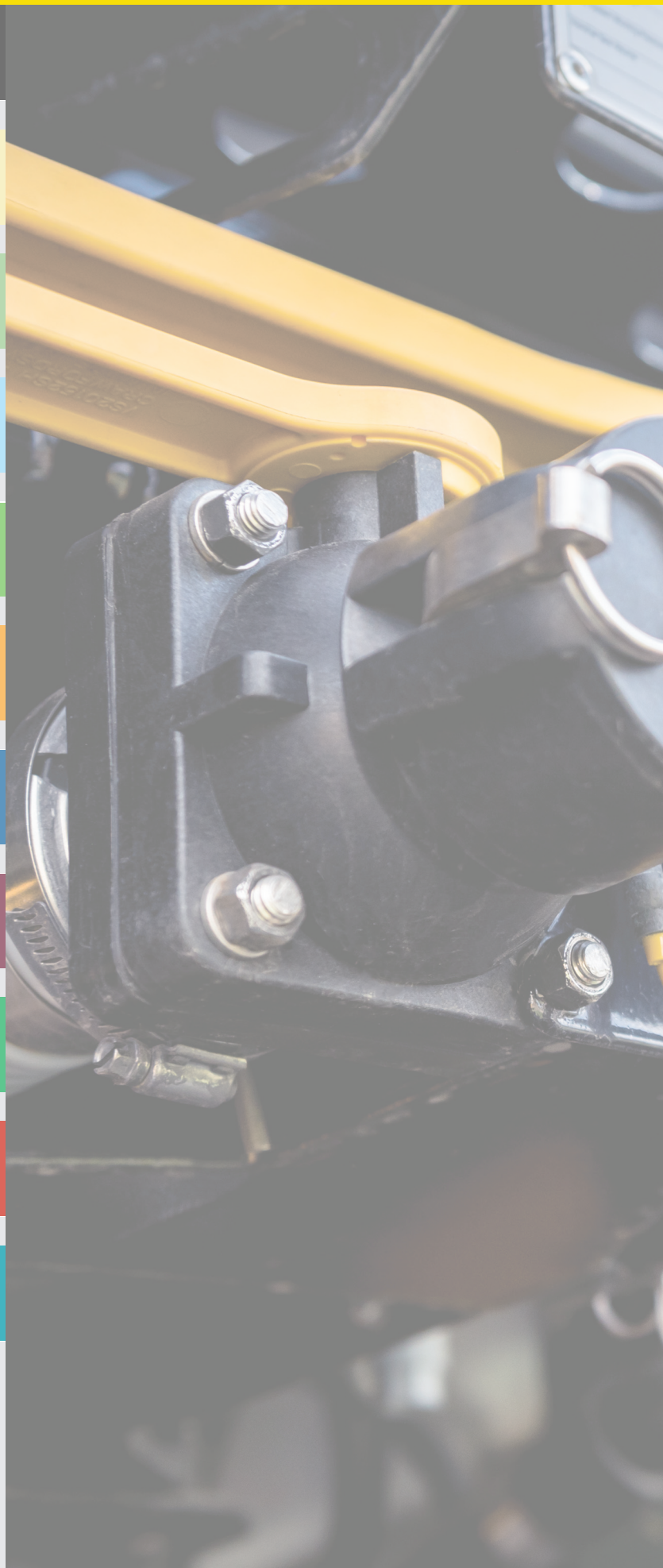

BANJO® Liquid Handling Products

MEVX ELECTRIC VALVES

FEATURES

- 12-volt DC operated
- 24-volt available
- Open/closed indicator
- ON/OFF has 1½ second response
- Open / Close verification available
- IP68 waterproof
- -0 to 150F (-18 to 65C) operating
- -67 to 221F (-55 to 105C) storage
- On/Off Actuator rated to 500,000 cycles
- Valve rated to 50,000 cycles leak-free
- Bolted valves have the same exact dimensions as our legacy EV valves.
- Additional protocols available including CAN/ISO BUS & Proportional Control

2" MEVX ON/OFF WELDED ELECTRIC VALVES

PART NO	DESCRIPTION	MAX PSI	PIPE SIZE	OPENING THRU BALL	QTY
MEVX200	2" STANDARD PORT ELECTRIC VALVE	300	2"	1½"	1
MEVX220	2" FULL PORT ELECTRIC VALVE	250	2"	2"	1

SKIRTED FLANGE GASKETS

FEATURES

- 1"-3" EPDM Gaskets
- Skirted design aligns with manifold flanges and stays in place during connections
- Grooves facilitate visual alignment of fittings at 45° increments

SKIRTED FLANGE GASKETS

PART NO	DESCRIPTION	GASKET MATERIAL	QTY
M102G	1" & 1¼" SKIRTED FLANGE GASKET	EPDM	1
M202G	1½" SKIRTED FLANGE GASKET	EPDM	1
M222G	2" SKIRTED FLANGE GASKET	EPDM	1
M302G	3" SKIRTED FLANGE GASKET	EPDM	1

EASY-FILL™ VALVES

FEATURES

- Eliminates multiple fittings for fill applications
- Available in 2" and 3" sizes
- Full flow (full port) design
- Stubby valve configuration reduces profile
- Extended coupler prevents handle interference

EASY-FILL™ VALVES

PART NO	DESCRIPTION	MAX PSI	LOT QTY
VSBHB204FP	2" FULL PORT EASY-FILL™ VALVE	150	2/BOX
VSBHB205FP	2" FULL PORT EASY-FILL™ VALVE W/CARRY HANDLE	150	4/BOX
VSBHB304FP	3" FULL PORT EASY-FILL™ VALVE	150	2/BOX
VSBHB305FP	3" FULL PORT EASY-FILL™ VALVE W/CARRY HANDLE	150	4/BOX
H25053	2" & 3" CARRY HANDLE	N/A	1

¼" -1" POLY MICRO VALVES

FEATURES

- 90° rotating handle
- 90° locking, rotating handle (with asterisk *)
- Precision molded polypropylene is reinforced with fiberglass for additional strength.
- Standard FKM seats and O-Rings

John Guest® Fitting

The brand "**John Guest**" is a registered trademark of John Guest International Limited.

MICRO VALVES

PART NO	DESCRIPTION	MAX PSI	THREAD SIZE	OPENING THRU BALL	LOT QTY
LV025V	¼" FEMALE NPT MICRO VALVE	300	¼"	⅜"	10
LV038V	⅜" FEMALE NPT MICRO VALVE	300	⅜"	⅜"	10
LV050V	½" FEMALE NPT MICRO VALVE	300	½"	15/32"	10
LV050SLV	½" SIDE LOAD MICRO VALVE	300	½"	½"	10
LV050SLLV*	½" SIDE LOAD LOCKING MICRO VALVE	300	½"	15/32"	10

MICRO VALVES

PART NO	DESCRIPTION	MAX PSI	THREAD SIZE	OPENING THRU	LOT QTY
LVHB038V	⅜" HOSE BARB MICRO VALVE	300	⅜"	⅜"	10
LVHB050V	½" HOSE BARB MICRO VALVE	300	½"	⅜"	10
LVHB075V	¾" HOSE BARB MICRO VALVE	300	¾"	15/32"	10

MICRO VALVES

PART NO	DESCRIPTION	MAX PSI	THREAD SIZE	OPENING THRU BALL	LOT QTY
LV025MTV	¼" FEMALE X MALE NPT MICRO VALVE	300	¼"	⅜"	10
LV038MTV	⅜" FEMALE X MALE NPT MICRO VALVE	300	⅜"	⅜"	10
LV038050MTV	⅜" FEMALE X ½" MALE NPT MICRO VALVE	300	⅜" x ½"	⅜"	10
LV038050MTLV*	⅜" FEMALE X ½" MALE NPT LOCKING MICRO VALVE	300	⅜" x ½"	⅜"	10
LV050MTV	½" FEMALE X MALE NPT MICRO VALVE	300	½"	15/32"	10
LV050100MTV	½" FEMALE X 1" MALE NPT MICRO VALVE	300	½"	15/32"	10
LV050100MTLV*	½" FEMALE X 1" MALE NPT LOCKING MICRO VALVE	300	½" x 1"	15/32"	10

MICRO VALVES

PART NO	DESCRIPTION	MAX PSI	THREAD SIZE	OPENING THRU BALL	LOT QTY
LVHB038050MTV	⅜"HOSE BARB X ½" MALE NPT MICRO VALVE	300	½"	⅜"	10
LVHB075MTV	¾" HOSE BARB X ¾" MALE NPT MICRO VALVE	300	¾"	½"	10
LVHB075100MTV	¾" HOSE BARB X 1" MALE NPT MICRO VALVE	300	1"	15/32"	10
LVHB075100MTLV	¾" HOSE BARB X 1" MALE NPT LOCKING MICRO VALVE	300	1"	15/32"	10

MICRO VALVES

PART NO	DESCRIPTION	MAX PSI	THREAD SIZE	OPENING THRU BALL	LOT QTY
LVPL025V	¼" FEMALE PUSH LOCK MICRO VALVE	300	¼"	⅜"	10
LVPL038V	⅜" FEMALE PUSH LOCK MICRO VALVE	150	⅜"	⅜"	10

½" - 2" 4 BOLTED VALVES

V100FP V125 V200

4 BOLTED VALVES

PART NO	DESCRIPTION	MAX PSI	PIPE SIZE	OPENING THRU	LOT QTY	REPLACEMENT HANDLE	REPAIR KIT
V050	½" FULL PORT VALVE	300	½"	¾"	6	V10153A	N/A
V075	¾" FULL PORT VALVE	300	¾"	¾"	12	V10153A	N/A
V100	1" STANDARD PORT VALVE	225	1"	¾"	12	V10153A	N/A
V100FP	1" FULL PORT VALVE	300	1"	1"	12	V10153A	V10200
V125	1¼" STANDARD PORT VALVE	300	1¼"	1"	6	V10153A	V10200
V125FP	1¼" FULL PORT VALVE	225	1¼"	1½"	6	V20153	N/A
V150	1½" FULL PORT VALVE	225	1½"	1½"	6	V20153	N/A
V200	2" STANDARD PORT VALVE	225	2"	1½"	12	V20153	N/A

FEATURES

- FKM seals.
- Precision molded polypropylene is reinforced with fiberglass for additional strength.
- Self-aligning ball moves freely against the PTFE seats for smooth operation. The valve opens and closes with very little pressure on the handle.
- Ball is diamond turned, after molding, to make it spherically perfect, which provides precise contact between ball and seats.
- PTFE self-lubricating stem bushings and seats cannot stick or bind.
- Stainless steel bolts.

REPAIR KIT INCLUDES:

- Ball
- Body gasket
- Thrust washer
- Ball seats
- Upper stem bushing
- Stem o-ring

VALVE ACCESSORIES

V25270

V25271

VALVE ACCESSORIES

PART NO	DESCRIPTION	FITS VALVES	LOT QTY
VL20153	LOCKING DEVICE	V125, V150, V200	1
V10270	STRAIGHT MOUNTING BRACKET	V100FP, V125	1
V10271	90° MOUNTING BRACKET	V100FP, V125	1
V25270	STRAIGHT MOUNTING BRACKET	V125FP, V150, V200	1
V25271	90° MOUNTING BRACKET	V125FP, V150, V200	1
V10153138	1" X 1⅜" HANDLE OFFSET	V100FP, V125	1
V20153138	2" FP X 1⅜" HANDLE OFFSET	V125FP, V150, V200	10
V25153138	2" FP X 1⅜" HANDLE OFFSET	V200FP	1

FEATURES

- 304 stainless steel construction
- Installs under valve handle
- Comes complete with handle and locking device
- Padlock not included

2"-4" 6 BOLTED VALVES

FEATURES

- FKM seals.
- Precision molded polypropylene is reinforced with fiberglass for additional strength.
- Self-aligning ball moves freely against the PTFE seats for smooth operation. The valve opens and closes with very little pressure on the handle.
- Ball is diamond turned, after molding, to make it spherically perfect, which provides precise contact between ball and seats.
- PTFE self-lubricating stem bushings and seats cannot stick or bind.
- Stainless steel bolts.

REPAIR KIT INCLUDES:

- Ball
- Body gasket
- Thrust washer
- Ball seats
- Upper stem bushing
- Stem o-ring

V200FP V300 V400

VFMT200FP

6 BOLTED VALVES

PART NO	DESCRIPTION	MAX PSI	PIPE SIZE	OPENING THRU BALL	LOT QTY	REPLACEMENT HANDLE	REPAIR KIT
V200FP	2" FULL PORT VALVE	225	2"	2"	8/BOX	V25153	V25200
VFMT200FP	2" FULL PORT VALVE W/ F ADAPTER	225	2"	2"	6/BOX	V25153	V25200
V300	3" STANDARD PORT VALVE	225	3"	2½"	8/BOX	V25153	V30200
V300FP	3" FULL PORT VALVE	200	3"	3"	6/BOX	V25153	V35200
V400	4" STANDARD PORT VALVE	100	4"	3½"	4/BOX	V25153	V40200

VALVE ACCESSORIES

FEATURES

- Stainless steel hardware
- Locks in open and closed positions
- Locking handle replaces standard handle (sold separately)
- Padlock not included

V25270

V25271

VALVE ACCESSORIES

PART NO	DESCRIPTION	FITS VALVES	QTY
VL25153	LOCKING HANDLE	V200FP, V300, V300FP, V400, VFMT200FP	1
V25270	STRAIGHT MOUNTING BRACKET	V200FP, V300, V300FP, V400, VFMT200FP	1
V25271	90° MOUNTING BRACKET	V200FP, V300, V300FP, V400, VFMT200FP	1

2" FULL PORT 4 BOLTED BALL VALVES

VFMT204FP V204FP

4 BOLTED FULL PORT VALVES

PART NO	DESCRIPTION	MAX PSI	PIPE SIZE	OPENING THRU BALL	LOT QTY	REPLACEMENT HANDLE	REPAIR KIT
VFMT204FP	2" FULL PORT VALVE MALE NPT X MALE ADAPTER	150	2"	2"	6/BOX	V25153	V25200
V204FP	2" FULL PORT VALVE	150	2"	2"	8/BOX	V25153	V25200

FEATURES

- FKM seals
- Stainless steel bolts
- PTFE self-lubricating stem bushings and seats cannot stick or bind
- Precision molded in fiberglass reinforced polypropylene
- Self-aligning ball moves freely against the PTFE seats for smoother operation
- Valve opens and closes with very little pressure on the handle
- Ball is diamond turned after molding to make it spherically perfect, which provides precise contact between ball and seats

REPAIR KIT INCLUDES:

- Ball
- Body gasket
- Thrust washer
- Ball seats
- Upper stem bushing
- Stem o-ring

2" FULL PORT ANSI FLANGE BOLTED BALL VALVES

VSF200FPAF

FULL PORT ANSI FLANGE BOLTED VALVES

PART NO	DESCRIPTION	MAX PSI	PIPE SIZE	OPENING THRU BALL	LOT QTY	REPLACEMENT HANDLE	REPAIR KIT
VSF200FPAF	2" FULL PORT VALVE MALE ADAPTER X 2" ANSI FLANGE	200	2"	2"	6/BOX	V25153SH	VS25200

FEATURES

- 100% PTFE seats
- FKM seals
- Glass-filled polypropylene
- Unique compact design
- Lightweight
- Gaskets featured on page 73

REPAIR KIT INCLUDES:

- Ball
- Body gasket
- Thrust washer
- Ball seats
- Upper stem bushing
- Stem o-ring

2" STANDARD PORT STUBBY BALL VALVES

FEATURES

- Stainless steel bolts
- Glass reinforced polypropylene
- Multiple design options
- Unique patented compact design
- Lightweight
- All PTFE seals

VSF200

VSMT200

VSFMT200

VSFHB200

2" STANDARD PORT STUBBY VALVES

PART NO	DESCRIPTION	MAX PSI	PIPE SIZE	OPENING THRU BALL	LOT QTY	REPLACEMENT HANDLE
VSF200	2" MALE ADAPTER X 2" FEMALE NPT	100	2"	1½"	6	VS20152SH
VSMT200	2" MALE NPT X 2" FEMALE NPT	100	2"	1½"	6	VS20152SH
VSFMT200	2" MALE ADAPTER X 2" MALE NPT	225	2"	1½"	12	VS20152SH
VSFHB200	2" MALE ADAPTER X 2" HOSE BARB	100	2"	1½"	6	VS20152SH

2" FULL PORT STUBBY BALL VALVES

VSMT204FP

VSF204FP

VS204FP

VSFMT204FP

VSFMT204HSFP

FEATURES

- Stainless steel bolts
- 100% PTFE ball seats
- Glass reinforced polypropylene
- Unique patented compact design
- Lightweight
- FKM body seals

REPAIR KIT INCLUDES:

- Ball
- Body gasket
- Thrust washer
- Ball seats
- Upper stem bushing
- Stem o-ring

2" FULL PORT STUBBY VALVES

PART NO	DESCRIPTION	MAX PSI	PIPE SIZE	OPENING THRU BALL	LOT QTY	REPLACEMENT HANDLE	REPAIR KIT
VSMT204FP	2" MALE NPT X 2" FEMALE NPT	200	2"	2"	6	VS25153	VS25200
VSF204FP	2" MALE ADAPTER X 2" FEMALE NPT	100	2"	2"	6	VS25153	VS25200
VS204FP	2" FEMALE NPT X 2" FEMALE NPT	225	2"	2"	6	VS25153	VS25200
VSFMT204FP	2" MALE ADAPTER X 2" MALE NPT	150	2"	2"	6	VS25153	VS25200
VSFMT204HSFP	2" FP MALE ADAPTER X 2" MALE NPT W/ SS BALL, STEM & HANDLE	150	2"	2"	6	N/A	VSSH25200

3" STANDARD PORT STUBBY BALL VALVES

FEATURES

- Stainless steel bolts
- Glass reinforced polypropylene
- FKM body seals
- Unique patented compact design
- Lightweight
- All PTFE seats
- Note: If repair kits not listed, components available.

VSF300

VSMT300

VSFMT300

3" STANDARD PORT STUBBY VALVES

PART NO	DESCRIPTION	MAX PSI	PIPE SIZE	OPENING THRU BALL	LOT QTY	REPLACEMENT HANDLE STRAIGHT	REPLACEMENT HANDLE SHORT
VSF300	3" FEMALE NPT X 3" MALE ADAPTER	100	3"	2½"	6/BOX	V25153	V25153SH
VSMT300	3" FEMALE NPT X 3" MALE NPT	100	3"	2½"	6/BOX	V25153	V25153SH
VSFMT300	3" MALE NPT X 3" MALE ADAPTER	225	3"	2½"	6/BOX	V25153	V25153SH

3" FULL PORT STUBBY BALL VALVES

FEATURES

- Stainless steel bolts
- Glass reinforced polypropylene
- FKM body seals
- Unique patented compact design
- Lightweight
- All PTFE ball seats
- Note: If repair kits not listed, components available.

VSFMT300FP

VSFMT300HSFP

3" FULL PORT STUBBY VALVES

PART NO	DESCRIPTION	MAX PSI	PIPE SIZE	OPENING THRU BALL	LOT QTY	REPLACEMENT HANDLE
VSFMT300FP	3" FULL PORT MALE ADAPTER X 3" MALE NPT	100	3"	3"	6/BOX	V25153
VSFMT300HSFP	3" FULL PORT MALE ADAPTER X 3" MALE NPT W/SS BALL, STEM & HANDLE	100	3"	3"	6/BOX	VS30153SS

3 WAY BOTTOM LOAD BALL VALVES

V100BL V150BL V200BL

FEATURES

- Stainless steel bolts
- Precision molded in fiberglass reinforced polypropylene for additional strength
- Self-aligning ball moves freely against the PTFE seats for smooth operation
- Ball is diamond turned after molding to make it spherically perfect, which provides precise contact between ball and seats
- PTFE self-lubricating stem bushings and seats
- FKM body seals
- Directional flow, right or left. Valve can be turned off to stop flow

3 WAY BOTTOM LOAD VALVES

PART NO	DESCRIPTION	MAX PSI	PIPE SIZE	OPENING THRU BALL	LOT QTY	HANDLE TYPE	REPLACEMENT HANDLE
V075BL	¾" 3-WAY BOTTOM LOAD VALVE	200	¾"	1"	6	T	N/A
V100BL	1" FP 3-WAY BOTTOM LOAD VALVE	225	1"	1"	6	T	N/A
V125BL	1¼" 3-WAY BOTTOM LOAD VALVE	300	1¼"	1½"	6	T	V20353TB
V150BL	1½" FP 3-WAY BOTTOM LOAD VALVE	225	1½"	1½"	6	T	V20353TB
V200BL	2" FP 3-WAY BOTTOM LOAD VALVE	200	2"	2"	8/BOX	STRAIGHT	V25353B

3 WAY SIDE LOAD BALL VALVES

V100SL V150SL V200SL

FEATURES

- Stainless steel bolts
- Precision molded in fiberglass reinforced polypropylene for additional strength
- Self-aligning ball moves freely against the PTFE seats for smooth operation
- Ball is diamond turned after molding to make it spherically perfect, which provides precise contact between ball and seats
- PTFE self-lubricating stem bushings and seats
- FKM body seals
- Directional flow, right or left. Valve cannot be turned off to stop flow

3 WAY SIDE LOAD VALVES

PART NO	DESCRIPTION	MAX PSI	PIPE SIZE	OPENING THRU BALL	LOT QTY	HANDLE TYPE	REPLACEMENT HANDLE	REPAIR KIT
V075SL	¾" 3-WAY SIDE LOAD VALVE	200	¾"	1"	6	STRAIGHT	V10153A	V10300SL
V100SL	1" FP 3-WAY SIDE LOAD VALVE	200	1"	1"	6	STRAIGHT	V10153A	V10300SL
V125SL	1¼" 3-WAY SIDE LOAD VALVE	300	1¼"	1½"	6	T	N/A	V15300SL
V150SL	1½" FP 3-WAY SIDE LOAD VALVE	225	1½"	1½"	6	T	N/A	V15300SL
V200SL	2" FP 3-WAY SIDE LOAD VALVE	225	2"	2"	8/BOX	STRAIGHT	V25153SH	V25200BL

1½" - 2" NOZZLE VALVES

FEATURES

- Lightweight hose end valve for convenient transfer of liquids into drums, tanks etc
- Angled end flange with 8" long polypropylene fill spout
- All stainless steel bolts

VA150

VA200FP

1½"-2" NOZZLE VALVES

PART NO	DESCRIPTION	MAX PSI	PIPE SIZE	OPENING THRU BALL	FEMALE NPT	LOT QTY	REPLACEMENT HANDLE	REPAIR KIT
VA150	1½" NOZZLE VALVE WITH 90° ELBOW	225	1½" x 8"	1½"	1½"	6	V20152	N/A
VA200	2" NOZZLE VALVE WITH 90° ELBOW	200	2" x 8"	1½"	2"	6	V20152	N/A
VA200FP	2" FP NOZZLE VALVE WITH 90° ELBOW	225	2" x 8"	2"	2"	6/BOX	V25152	V25200

1" DISPENSING NOZZLES

FEATURES

- Glass reinforced polypropylene
- 304 stainless steel handle, spring and pin
- FKM rubber parts only
- Resists corrosion

VN100

V10161

1" DISPENSING NOZZLE

PART NO	DESCRIPTION	MAX PSI	PIPE SIZE	OPENING THRU BALL	FEMALE NPT	QTY	REPAIR KIT
VN100	1" DISPENSING NOZZLE	150	1"	N/A	1"	1	VN10200
V10161	1" NOZZLE PIPE FOR USE WITH V100, V100FP, UV100FP, SUV100FP	N/A	1"	N/A	1"	1	N/A

½" - 2" SINGLE UNION SPINWELD VALVES

SUV125FP

MSUV100FP

½"-2" SINGLE UNION SPINWELD VALVES

PART NO	DESCRIPTION	MAX PSI	PIPE SIZE	OPENING THRU BALL	LOT QTY
SUV050FP	½" FULL PORT SINGLE UNION SPINWELD VALVE	300	½"	½"	10
SUV075FP	¾" FULL PORT SINGLE UNION SPINWELD VALVE	300	¾"	¾"	10
SUV100FP	1" FULL PORT SINGLE UNION SPINWELD VALVE	300	1"	1"	10
SUV125FP	1¼" FULL PORT SINGLE UNION SPINWELD VALVE	300	1¼"	1¼"	10
SUV150FP	1½" FULL PORT SINGLE UNION SPINWELD VALVE	300	1½"	1½"	10
SUV200FP	2" FULL PORT SINGLE UNION SPINWELD VALVE	200	2"	2"	10
MSUV100FP	1" MANIFOLD FULL PORT SINGLE UNION SPINWELD VALVE	300		1"	10

FEATURES

- Precision molded in glass reinforced polypropylene for strength and chemical resistance
- PTFE seats for smooth and proper sealing characteristics
- EPDM O-rings to handle most fertilizers and many chemicals
- Double O-rings in stem area for extra sealing protection
- Interlocking body and end plate to allow easy thread connection when installing valves

½" - 2" SINGLE UNION VALVES

½"-2" SINGLE UNION VALVES

PART NO	DESCRIPTION	MAX PSI	PIPE SIZE	OPENING THRU BALL	LOT QTY
UV050FP	½" FULL PORT SINGLE UNION VALVE	300	½"	¾"	10
UV075FP	¾" FULL PORT SINGLE UNION VALVE	300	¾"	¾"	10
UV100FP	1" FULL PORT SINGLE UNION VALVE	300	1"	1"	10
UV125FP	1¼" FULL PORT SINGLE UNION VALVE	225	1¼"	1¼"	10
UV150FP	1½" FULL PORT SINGLE UNION VALVE	200	1½"	1½"	10
UV200FP	2" FULL PORT SINGLE UNION VALVE	300	2"	2"	10

FEATURES

- Precision molded in glass reinforced polypropylene for strength and chemical resistance
- PTFE seats for smooth and proper sealing characteristics
- Double O-rings in stem area for extra sealing protection
- Interlocking body and end plate to allow easy thread connection when installing valves

½" - 3" CHECK VALVES

FEATURES

- One piece construction
- Glass reinforced polypropylene
- 316 stainless steel springs
- EPDM gasket

½"-3" CHECK VALVES

PART NO	DESCRIPTION	OPENING PRESSURE PSI	MAX PSI	PIPE SIZE	LOT QTY
CV050	½" CHECK VALVE	6-7	300	½"	10
CV100MT	1" MALE X FEMALE NPT CHECK VALVE	1	300	1"	10
CV100	1" CHECK VALVE	1	300	1"	10
CV221	2" FULL PORT CHECK VALVE	>0.5	300	2"	10
CV300	3" FULL PORT CHECK VALVE W/ 5 LB SPRING	1.5	300	3"	1
CV301	3" FULL PORT CHECK VALVE W/½ LB SPRING	>0.5	N/A	3"	1

¼" - 3" STAINLESS STEEL FULL PORT VALVES

FEATURES

- 316 stainless steel
- Blow out proof stem
- All valves 100% tested by air, under water at 100 PSI in open and closed positions
- Latch locking handle performs in both open and closed positions
- Mounting pad
- PTFE seals and seats

¼"-3" STAINLESS STEEL FULL PORT VALVES

PART NO	DESCRIPTION	MAX PSI	PIPE SIZE	OPENING THRU BALL	QTY	REPAIR KIT
VSS025	¼" SS FULL PORT VALVE	1000	¼"	¼"	1	VSS02500
VSS038	⅜" SS FULL PORT VALVE	1000	⅜"	⅜"	1	VSS02500
VSS050	½" SS FULL PORT VALVE	1000	½"	½"	1	VSS05200
VSS075	¾" SS FULL PORT VALVE	1000	¾"	¾"	1	VSS07200
VSS100	1" SS FULL PORT VALVE	1000	1"	1"	1	VSS10200
VSS150	1½" SS FULL PORT VALVE	1000	1½"	1½"	1	VSS15200
VSS200	2" SS FULL PORT VALVE	1000	2"	2"	1	VSS25200
VSS300	3" SS FULL PORT VALVE	1000	3"	3"	1	VSS35200

¾" - 1" PINCH VALVES

FEATURES

- Open position allows full unobstructed flow of 50-60 GPM
- Air pressure collapses the internal rubber sleeve to provide positive shut off
- Standard EPDM rubber bladder seal and FKM available
- Female NPT threads
- ATTENTION: Normally an open valve and has a maximum liquid pressure of 70 PSI. Pressure differential = pressure it takes to close valve

¾"-1" PINCH VALVES

PART NO	DESCRIPTION	GASKET	MAX PSI	PIPE SIZE	PRESSURE DIFFERENTIAL	LOT QTY
PV075	¾" X ¾" PINCH VALVE	EPDM	300	¾"	15 TO 20 PSI	10
PV100	1" X 1" PINCH VALVE	EPDM	300	1"	15 TO 20 PSI	1
PV100-075	1" X ¾" PINCH VALVE	EPDM	300	1" X ¾"	15 TO 20 PSI	10
PV100-075V	1" X ¾" PINCH VALVE	FKM	300	1" X ¾"	15 TO 20 PSI	1
PV10265	BLADDER	EPDM	N/A			1
PV10265V	BLADDER	FKM	N/A			1

SMALLER

- EVX 2" full port and 3" models are over 35% smaller than the average competitive valve. The 1½", 2" full port and 3" models are also substantially lighter than the average competitive valve.

SMARTER

- EVX offers many protocol options for your needs:
  On/Off
  Regulating
  Regulating with linear feedback
  CAN/ISO BUS
  Proportional control

- Diagnostic options for CANBUS
  Voltage
  Temperature
  Cycle Count

TOUGHER

- Setting the new standard for electric valve toughness, EVX passes 52 separate durability torture tests including mechanical shock, vibration, extreme temperature, rain/shine, operating pressure, and rigorous longevity tests.

SMALLER / SMARTER / TOUGHER

¾" - 1½" EVX SERIES

FEATURES

- 12-volt DC operated
- 24-volt available
- Open/closed indicator
- ¾"-1¼" ON/OFF has ¾ sec response
- 1½" ON/OFF has 1½ sec response
- Regulating has 4 sec response
- Open / Close verification available
- IP68 waterproof
- -0 to 150F (-18 to 65C) operating
- -67 to 221F (-55 to 105C) storage
- On/Off Actuator rated to 500,000 cycles
- Regulating Actuator rated to 250,000 cycles
- Valve rated to 50,000 cycles leak-free
- Bolted valves have the same exact dimensions as our legacy EV valves.
- Additional protocols available including CAN/ISO BUS & Proportional Control

MATERIALS

- 316 stainless steel ball & stem
- Poly ball available
- Stainless steel hardware
- Fiberglass reinforced polypropylene
- PTFE seats
- FKM stem seals

ON/OFF

- Red = +12V DC
- Black = Ground
- White = +12VDC (Open)
  0VDC (Close)

4 WIRE REGULATING

- Red = +12V DC (Open)
- White = Ground (Open)
- Black = +12V DC (Close)
- Green = Ground (Close)

¾" - 1½" EVX ON/OFF BOLTED ELECTRIC VALVES

PART NO	DESCRIPTION	MAX PSI	PIPE SIZE	OPENING THRU BALL	QTY
EVX071	¾" FULL PORT ELECTRIC VALVE	300	¾"	1"	1
EVX101	1" FULL PORT ELECTRIC VALVE	300	1"	1"	1
EVX121	1¼" STANDARD PORT ELECTRIC VALVE	300	1¼"	1"	1
EVX151	1½" FULL PORT ELECTRIC VALVE	250	1½"	1½"	1

¾" - 1½" EVX REGULATING BOLTED ELECTRIC VALVES

PART NO	DESCRIPTION	MAX PSI	PIPE SIZE	OPENING THRU BALL	QTY
EVXR071	¾" FULL PORT ELECTRIC VALVE	300	¾"	1"	1
EVXR101	1" FULL PORT ELECTRIC VALVE	300	1"	1"	1
EVXR151	1½" FULL PORT ELECTRIC VALVE	250	1½"	1½"	1

BANJO Liquid Handling Products

2" EVX SERIES

FEATURES

- 12-volt DC operated
- 24-volt available
- Open/closed indicator
- ON/OFF has 1½ second response
- Regulating has 4 second response
- Open / Close verification available
- IP68 waterproof
- -0 to 150F (-18 to 65C) operating
- -67 to 221F (-55 to 105C) storage
- On/Off Actuator rated to 500,000 cycles
- Regulating Actuator rated to 250,000 cycles
- Valve rated to 50,000 cycles leak-free
- Bolted valves have the same exact dimensions as our legacy EV valves.
- Additional protocols available including CAN/ISO BUS & Proportional Control

MATERIALS

- 316 stainless steel ball & stem
- Poly ball available
- Stainless steel hardware
- Fiberglass reinforced polypropylene
- PTFE seats
- FKM stem seals

ON/OFF

- Red = +12V DC
- Black = Ground
- White = +12VDC (Open)
  0VDC (Close)

4 WIRE REGULATING

- Red = +12V DC (Open)
- White = Ground (Open)
- Black = +12V DC (Close)
- Green = Ground (Close)

2" EVX ON/OFF BOLTED ELECTRIC VALVES

PART NO	DESCRIPTION	MAX PSI	PIPE SIZE	OPENING THRU BALL	QTY
EVX201	2" STANDARD PORT ELECTRIC VALVE	250	2"	1½"	1
EVX221	2" FULL PORT ELECTRIC VALVE	125	2"	2"	1

2" EVX REGULATING BOLTED ELECTRIC VALVES

PART NO	DESCRIPTION	MAX PSI	PIPE SIZE	OPENING THRU BALL	QTY
EVXR201	2" STANDARD PORT ELECTRIC VALVE	250	2"	1½"	1
EVXR221	2" FULL PORT ELECTRIC VALVE	125	2"	2"	1

3" EVX SERIES

FEATURES

- 12-volt DC operated
- 24-volt available
- Open/closed indicator
- ON/OFF has 4 second response
- Regulating has 4 second response
- Open / Close verification available
- IP68 waterproof
- -0 to 150F (-18 to 65C) operating
- -67 to 221F (-55 to 105C) storage
- Actuator rated to 250,000 cycles
- Valve rated to 50,000 cycles leak-free
- Additional protocols available including CAN/ISO BUS & Proportional Control

MATERIALS

- 316 stainless steel ball & stem
- Stainless steel hardware
- Fiberglass reinforced polypropylene
- Zinc alloy lower actuator housing
- PTFE seats
- FKM stem seals

ON/OFF

- Red = +12V DC
- Black = Ground
- White = +12VDC (Open)
  0VDC (Close)

4 WIRE REGULATING

- Red = +12V DC (Open)
- White = Ground (Open)
- Black = +12V DC (Close)
- Green = Ground (Close)

3" EVX ON/OFF ELECTRIC VALVES

PART NO	DESCRIPTION	MAX PSI	PIPE SIZE	OPENING THRU BALL	QTY
EVX300	3" FULL PORT ELECTRIC VALVE	150	3"	3"	1

3" EVX REGULATING ELECTRIC VALVES

PART NO	DESCRIPTION	MAX PSI	PIPE SIZE	OPENING THRU BALL	QTY
EVXR300	3" FULL PORT ELECTRIC VALVE	125	3"	3"	1

¾"- 2" EVX SERIES BOTTOM & SIDE LOAD VALVES

FEATURES

- 12-volt DC operated
- 24-volt available
- Open/closed indicator
- 1" & 1¼" ON/OFF has ¾ second response
- 1½" & 2" ON/OFF has 1½" second response
- Open / Close verification available
- IP68 waterproof
- -0 to 150F (-18 to 65C) operating
- -67 to 221F (-55 to 105C) storage
- On/Off Actuator rated to 500,000 cycles
- Valve rated to 50,000 cycles leak-free
- These bolted valves have the exact same dimensions as our legacy EV valves.
- Additional protocols available including CAN/ISO BUS & Proportional Control

MATERIALS

- 316 stainless steel ball & stem
- Stainless steel hardware
- Fiberglass reinforced polypropylene
- PTFE seats
- FKM stem seals

ON/OFF

- Red = +12V DC
- Black = Ground
- White = +12VDC (Open)
  0VDC (Close)

4 WIRE REGULATING

- Red = +12V DC (Open)
- White = Ground (Open)
- Black = +12V DC (Close)
- Green = Ground (Close)

¾"-2" EVX BOLTED BOTTOM LOAD ELECTRIC VALVES

PART NO	DESCRIPTION	MAX PSI	PIPE SIZE	OPENING THRU BALL	QTY
EVX075BL	¾" FULL PORT BOTTOM LOAD ELECTRIC VALVE	300	¾"	1"	1
EVX100BL	1" FULL PORT BOTTOM LOAD ELECTRIC VALVE	300	1"	1"	1
EVX125BL	1¼" FULL PORT SIDE LOAD ELECTRIC VALVE	250	1¼"	1"	1
EVX150BL	1½" FULL PORT SIDE LOAD ELECTRIC VALVE	250	1½"	1½"	1
EVX200BL	2" STANDARD PORT BOTTOM LOAD ELECTRIC VALVE	250	2"	1½"	1
EVX220BL	2" FULL PORT BOTTOM LOAD ELECTRIC VALVE	125	2"	2"	1

¾"-2" EVX BOLTED SIDE LOAD ELECTRIC VALVES

PART NO	DESCRIPTION	MAX PSI	PIPE SIZE	OPENING THRU BALL	QTY
EVX075SL	¾" FULL PORT SIDE LOAD ELECTRIC VALVE	300	¾"	1"	1
EVX100SL	1" FULL PORT SIDE LOAD ELECTRIC VALVE	300	1"	1"	1
EVX125SL	1¼" FULL PORT SIDE LOAD ELECTRIC VALVE	250	1¼"	1"	1
EVX150SL	1½" FULL PORT SIDE LOAD ELECTRIC VALVE	250	1½"	1½"	1
EVX200SL	2" STANDARD PORT SIDE LOAD ELECTRIC VALVE	250	2"	1½"	1
EVX220SL	2" FULL PORT SIDE LOAD ELECTRIC VALVE	125	2"	2"	1

⅜" - ½" LEV SERIES

FEATURES

- 12 Volt DC
- Stationary current draw: less than 0.04 amps
- Rotating current draw: less than 0.40 amps
- Stall current: 0.75 amps
- Response time: 1/3 second open to close
- TFM seats
- EPDM seals
- Fiberglass reinforced polypropylene
- Integrated mounting slot
- Standard 3 wire configuration

LEV038 LEV050

⅜"-½" ON/OFF ELECTRIC VALVES					
PART NO	DESCRIPTION	MAX PSI	PIPE SIZE	OPENING THRU BALL	QTY
LEV038	⅜" FULL PORT ELECTRIC VALVE	300	⅜"	⅜"	1
LEV050	½" ELECTRIC VALVE	300	½"	15/32"	1

LEV038PL

⅜" ELECTRIC VALVES W/ PUSH LOCK					
PART NO	DESCRIPTION	MAX PSI	PIPE SIZE	OPENING THRU BALL	QTY
LEV038PL	⅜" FULL PORT ELECTRIC VALVE W/ PUSH LOCK	150	⅜"	⅜"	1

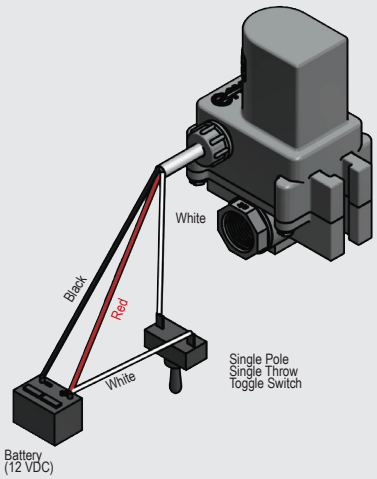

BANJO Liquid Handling Products

NO THREADS. NO SWEAT.

FLANGE CONNECTIONS FOR EVERY PRODUCT

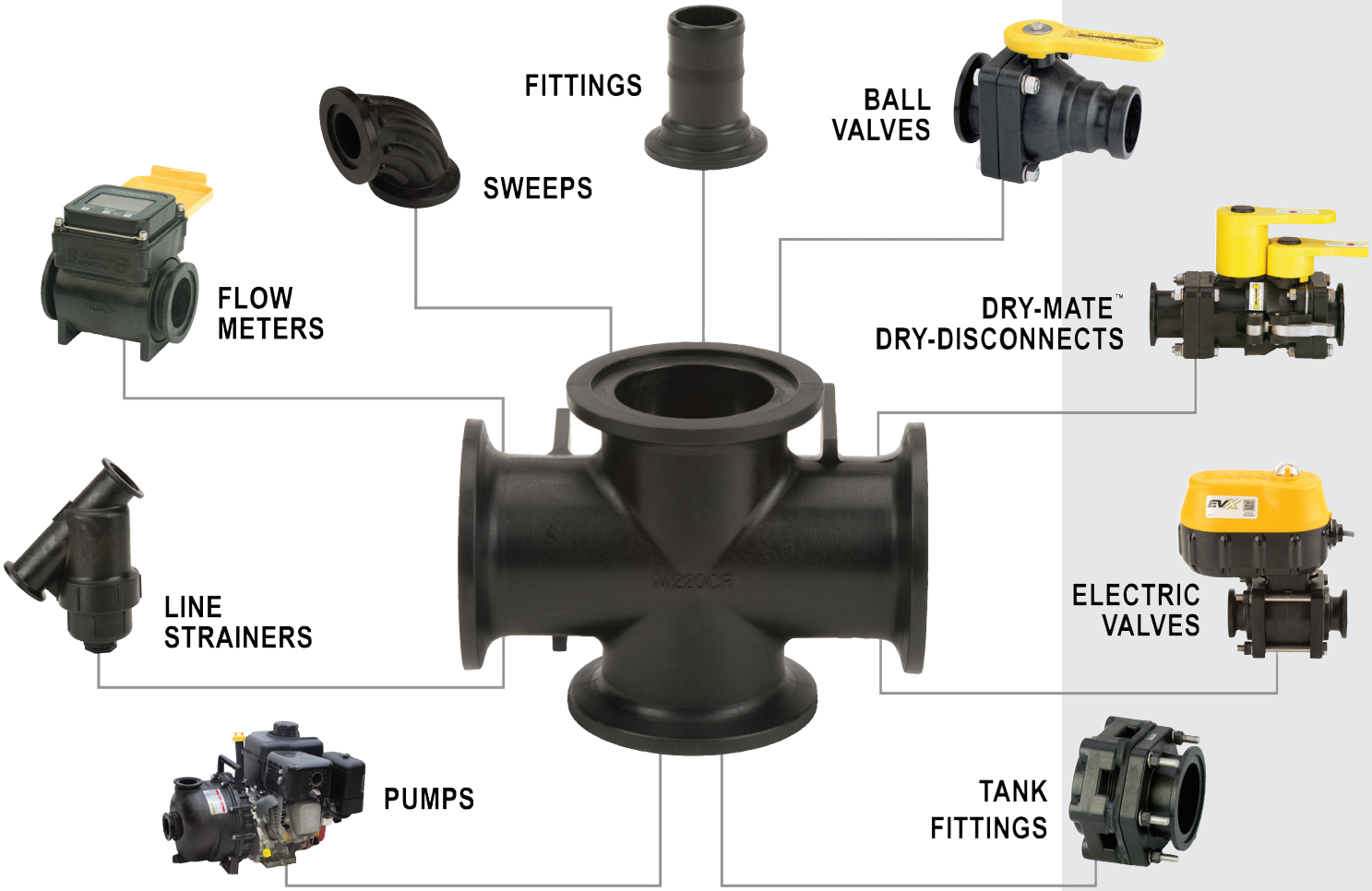

SKIP THE TAPE AND SEALANT

Flange connections utilize clamps instead of threads, facilitating quick and easy assembly and disassembly while ensuring a leak-proof system. Threaded pipe needs tape or sealant, and the slightest imperfection in the pipe or seal can cause a leak. With properly installed flange connections, you won't worry about connection leaks or wait for sealant to cure.

SAVE TIME. SAVE MONEY.

Time spent unthreading systems and repairing leaks from faulty connections is unproductive and ultimately hits your pocketbook. Banjo's manifold flange systems get you back in the field and out of the shop in no time.

GET RIGHT TO THE SOURCE

With Banjo manifold flange connections, the days of spending hours unhooking entire systems of valves and fittings are over. You can directly isolate and replace the problematic part or replumb sections without disassembling the whole system.

1" MEVX SERIES

FEATURES

- 12-volt DC operated
- 24-volt available
- Open/closed indicator
- ON/OFF has ¾ second response
- Regulating has 4 second response
- Open / Close verification available
- IP68 waterproof
- -0 to 150F (-18 to 65C) operating
- -67 to 221F (-55 to 105C) storage
- On/Off Actuator rated to 500,000 cycles
- Regulating Actuator rated to 250,000 cycles
- Valve rated to 50,000 cycles leak-free
- Bolted valves have the same exact dimensions as our legacy EV valves.
- Additional protocols available including CAN/ISO BUS & Proportional Control

MATERIALS

- 316 stainless steel ball & stem
- Poly ball available on bolted valves
- Stainless steel hardware
- Fiberglass reinforced polypropylene
- PTFE seats
- FKM stem seals

ON/OFF

- Red = +12V DC
- Black = Ground
- White = +12VDC (Open)
  0VDC (Close)

4 WIRE REGULATING

- Red = +12V DC (Open)
- White = Ground (Open)
- Black = +12V DC (Close)
- Green = Ground (Close)

1" MEVX ON/OFF WELDED ELECTRIC VALVES

PART NO	DESCRIPTION	MAX PSI	PIPE SIZE	OPENING THRU BALL	QTY
MEVX100	1" FULL PORT ELECTRIC VALVE	300	1"	1"	1

1" MEVX REGULATING WELDED ELECTRIC VALVES

PART NO	DESCRIPTION	MAX PSI	PIPE SIZE	OPENING THRU BALL	QTY
MEVXR100	1" FULL PORT ELECTRIC VALVE	300	1"	1"	1

1" MEVX ON/OFF BOLTED ELECTRIC VALVES

PART NO	DESCRIPTION	MAX PSI	PIPE SIZE	OPENING THRU BALL	QTY
MEVX101	1" FULL PORT ELECTRIC VALVE	300	1"	1"	1

1" MEVX REGULATING BOLTED ELECTRIC VALVES

PART NO	DESCRIPTION	MAX PSI	PIPE SIZE	OPENING THRU BALL	QTY
MEVXR101	1" FULL PORT ELECTRIC VALVE	300	1"	1"	1

2" MEVX ON/OFF WELDED ELECTRIC VALVES

PART NO	DESCRIPTION	MAX PSI	PIPE SIZE	OPENING THRU BALL	QTY
MEVX200	2" STANDARD PORT ELECTRIC VALVE	300	2"	1½"	1
MEVX220	2" FULL PORT ELECTRIC VALVE	250	2"	2"	1

2" MEVX REGULATING WELDED ELECTRIC VALVES

PART NO	DESCRIPTION	MAX PSI	PIPE SIZE	OPENING THRU BALL	QTY
MEVXR200	2" STANDARD PORT ELECTRIC VALVE	250	2"	1½"	1
MEVXR220	2" FULL PORT ELECTRIC VALVE	250	2"	2"	1

2" MEVX ON/OFF BOLTED ELECTRIC VALVES

PART NO	DESCRIPTION	MAX PSI	PIPE SIZE	OPENING THRU BALL	QTY
MEVX201	2" STANDARD PORT ELECTRIC VALVE	250	2"	1½"	1
MEVX221	2" FULL PORT ELECTRIC VALVE	125	2"	2"	1

2" MEVX SERIES

FEATURES

- 12-volt DC operated
- 24-volt available
- Open/closed indicator
- ON/OFF has 1½ second response
- Regulating has 4 second response
- Open / Close verification available
- IP68 waterproof
- -0 to 150F (-18 to 65C) operating
- -67 to 221F (-55 to 105C) storage
- On/Off Actuator rated to 500,000 cycles
- Regulating Actuator rated to 250,000 cycles
- Valve rated to 50,000 cycles leak-free
- Bolted valves have the same exact dimensions as our legacy EV valves.
- Additional protocols available including CAN/ISO BUS & Proportional Control

MATERIALS

- 316 stainless steel ball & stem
- Poly ball available on bolted valves
- Stainless steel hardware
- Fiberglass reinforced polypropylene
- PTFE seats
- FKM stem seals

ON/OFF

- Red = +12V DC
- Black = Ground
- White = +12VDC (Open)
  0VDC (Close)

4 WIRE REGULATING

- Red = +12V DC (Open)
- White = Ground (Open)
- Black = +12V DC (Close)
- Green = Ground (Close)

3" MEVX SERIES

FEATURES

- 12-volt DC operated
- 24-volt available
- Open/closed indicator
- ON/OFF 3" has 4 second response
- Regulating 3" has 4 second response
- Open / Close verification available
- IP68 waterproof
- -0 to 150F (-18 to 65C) operating
- -67 to 221F (-55 to 105C) storage
- Actuator rated to 250,000 cycles
- Valve rated to 50,000 cycles leak-free
- Additional protocols available including CAN/ISO BUS & Proportional Control

MATERIALS

- 316 stainless steel ball & stem
- Stainless steel hardware
- Fiberglass reinforced polypropylene
- Zinc alloy lower actuator housing
- PTFE seats
- FKM stem seals

ON/OFF

- Red = +12V DC
- Black = Ground
- White = +12VDC (Open)
  0VDC (Close)

4 WIRE REGULATING

- Red = +12V DC (Open)
- White = Ground (Open)
- Black = +12V DC (Close)
- Green = Ground (Close)

3" MEVX ON/OFF ELECTRIC VALVES

PART NO	DESCRIPTION	MAX PSI	PIPE SIZE	OPENING THRU BALL	QTY
MEVX300	3" FULL PORT ELECTRIC VALVE	125	3"	3"	1

3" MEVX REGULATING ELECTRIC VALVES

PART NO	DESCRIPTION	MAX PSI	PIPE SIZE	OPENING THRU BALL	QTY
MEVXR300	3" FULL PORT ELECTRIC VALVE	125	3"	3"	1

1"- 3" MEVX SERIES BOTTOM & SIDE LOAD VALVES

FEATURES

- 12-volt DC operated
- 24-volt available
- Open/closed indicator
- ON/OFF 1" has ¾ second response
- ON/OFF 2" has 1½ second response
- ON/OFF 3" has 4 second response
- Open / Close verification available
- IP68 waterproof
- -0 to 150F (-18 to 65C) operating
- -67 to 221F (-55 to 105C) storage
- 1"-2" On/Off Actuator rated to 500,000 cycles
- 3" On/Off & Regulating Actuator rated to 250,000 cycles
- Valve rated to 50,000 cycles leak-free
- Additional protocols available including CAN/ISO BUS & Proportional Control

MATERIALS

- 316 stainless steel ball & stem
- Stainless steel hardware
- Fiberglass reinforced polypropylene
- Zinc alloy lower actuator housing (3" only)
- PTFE seats
- FKM stem seals

ON/OFF

- Red = +12V DC
- Black = Ground
- White = +12VDC (Open)
  0VDC (Close)

4 WIRE REGULATING

- Red = +12V DC (Open)
- White = Ground (Open)
- Black = +12V DC (Close)
- Green = Ground (Close)

1"-3" MEVX BOTTOM LOAD ELECTRIC VALVES

PART NO	DESCRIPTION	MAX PSI	PIPE SIZE	OPENING THRU BALL	QTY
MEVX100BL	1" FULL PORT MANIFOLD BOTTOM LOAD ELECTRIC VALVE	300	1"	1"	1
MEVX200BL	2" STANDARD PORT MANIFOLD BOTTOM LOAD ELECTRIC VALVE	250	2"	1½"	1
MEVX220BL	2" FULL PORT MANIFOLD BOTTOM LOAD ELECTRIC VALVE	125	2"	2"	1
MEVX300BL	3" FULL PORT MANIFOLD BOTTOM LOAD ELECTRIC VALVE	125	3"	3"	1

1"-2" MEVX SIDE LOAD ELECTRIC VALVES

PART NO	DESCRIPTION	MAX PSI	PIPE SIZE	OPENING THRU BALL	QTY
MEVX100SL	1" FULL PORT MANIFOLD SIDE LOAD ELECTRIC VALVE	300	1"	1"	1
MEVX200SL	2" STANDARD PORT MANIFOLD SIDE LOAD ELECTRIC VALVE	250	2"	1½"	1
MEVX220SL	2" FULL PORT MANIFOLD SIDE LOAD ELECTRIC VALVE	125	2"	2"	1

1"-2" MEVX SIDE LOAD REGULATING ELECTRIC VALVES

PART NO	DESCRIPTION	MAX PSI	PIPE SIZE	OPENING THRU BALL	QTY
MEVXR100SL	1" FULL PORT MANIFOLD SIDE LOAD ELECTRIC VALVE	300	1"	1"	1
MEVXR200SL	2" STANDARD PORT MANIFOLD SIDE LOAD ELECTRIC VALVE	250	2"	1½"	1
MEVXR220SL	2" FULL PORT MANIFOLD SIDE LOAD ELECTRIC VALVE	125	2"	2"	1

MEVX BANKED VALVES

FEATURES

- Valve sizes 1"-2" SP
- Number of valves from two to five bank
- Welded or bolted valves available
- Bolted valves have the same exact dimensions as our legacy EV valves.
- Additional protocols available including CAN/ISO BUS & Proportional Control

MEVX ON/OFF WELDED BANKED ELECTRIC VALVES

PART NO	DESCRIPTION	MAX PSI	PIPE SIZE	OPENING THRU BALL	QTY
MEVX102	1" FULL PORT 2 BANK ELECTRIC VALVE	300	1"	1"	1
MEVX103	1" FULL PORT 3 BANK ELECTRIC VALVE	300	1"	1"	1
MEVX104	1" FULL PORT 4 BANK ELECTRIC VALVE	300	1"	1"	1

MEVX ON/OFF BOLTED BANKED ELECTRIC VALVES

PART NO	DESCRIPTION	MAX PSI	PIPE SIZE	OPENING THRU BALL	QTY
MEVX1012	1" FULL PORT 2 BANK ELECTRIC VALVE	300	1"	1"	1
MEVX1013	1" FULL PORT 3 BANK ELECTRIC VALVE	300	1"	1"	1
MEVX1014	1" FULL PORT 4 BANK ELECTRIC VALVE	300	1"	1"	1

1" LEV ELECTRIC MANIFOLD VALVE

FEATURES

- TFM seats & EPDM seals
- 12-volt DC operated
- Internally fused/automatic reset
- Stationary current draw: less than 0.04 amps
- Rotating current draw: less than 0.40 amps
- Stall current: 0.75 amps
- 1/3 second response time
- Integrated mounting slot
- 3 wire configuration
- Higher torque motor to power through thick liquids and demanding applications. (MLEV100A)
- Reinforced nylon stem more than triples the strength of the standard 1" LEV. (MLEV100A)

ON/OFF

- Red = +12V DC
- Black = Ground
- White = +12VDC (Open)
  0VDC (Close)

MLEV100 MLEV100A MLEV100C

1" ON/OFF ELECTRIC VALVES

PART NO	DESCRIPTION	MAX PSI	PIPE SIZE	OPENING THRU BALL	QTY
MLEV100	1" MANIFOLD ELECTRIC VALVE	300	1"	½"	1
MLEV100A	1" MANIFOLD ELECTRIC VALVE WITH HIGHER TORQUE MOTOR, SS BALL	300	1"	½"	1
MLEV100C	1" MANIFOLD ELECTRIC VALVE WITH HIGHER TORQUE MOTOR, SS BALL, 3 WIRE	300	1"	½"	1

MV200CF MV300CF

1" - 3" 4 & 6 BOLTED VALVES

FEATURES

- FKM seals.
- Precision molded polypropylene is reinforced with fiberglass for additional strength
- Self-aligning ball moves freely against the PTFE seats for smooth operation. The valve opens and closes with very little pressure on the handle
- Ball is diamond turned, after molding, to make it spherically perfect, which provides precise contact between ball and seats.
- PTFE self-lubricating stem bushings and seats cannot stick or bind
- Stainless steel bolts

REPAIR KIT INCLUDES:

- Ball
- Body gasket
- Thrust washer
- Ball seats
- Upper stem bushing
- Stem o-ring

MANIFOLD 4 & 6 BOLTED VALVES

PART NO	DESCRIPTION	MAX PSI	PIPE SIZE	OPENING THRU BALL	LOT QTY	REPLACEMENT HANDLE	REPAIR KIT
MV100CF	1" FULL PORT MANIFOLD VALVE	300	1"	1"	12	V10153A	V10200
MV200CF	2" STANDARD PORT MANIFOLD VALVE	225	2"	1½"	12/BOX	V20153	N/A
MV220CF	2" FULL PORT MANIFOLD VALVE	300	2"	2"	8/BOX	V25153	V25200
MV300	3" STANDARD PORT MANIFOLD VALVE	150	3"	2½"	6/BOX	V25153	V30200
MV300CF	3" FULL PORT MANIFOLD VALVE	200	3"	3"	6/BOX	V25153	V35200

2" BOLTED 5 WAY VALVE

FEATURES

- FKM seals
- Precision molded polypropylene is reinforced with fiberglass for additional strength
- Self-aligning ball moves freely against the PTFE seats for smooth operation. The valve opens and closes with very little pressure on the handle
- Ball is diamond turned, after molding, to make it spherically perfect, which provides precise contact between ball and seats.
- PTFE self-lubricating stem bushings and seats cannot stick or bind
- Stainless steel bolts

MANIFOLD BOLTED 5 WAY VALVE

PART NO	DESCRIPTION	MAX PSI	PIPE SIZE	OPENING THRU BALL	QTY
MV225CF	2" FULL PORT MANIFOLD 5 WAY VALVE	100	2"	2"	1

2" STUBBY VALVES

FEATURES

- Precision molded polypropylene is reinforced with fiberglass for additional strength.
- Self-aligning ball moves freely against the PTFE seats for smooth operation. The valve opens and closes with very little pressure on the handle.
- Ball is diamond turned, after molding, to make it spherically perfect, which provides precise contact between ball and seats.
- PTFE self-lubricating stem bushings and seats cannot stick or bind.
- Stainless steel bolts.
- Standard size has TFE seals and Full Port size has FKM seals

VSMT200CF

VSF200CF

MVS220FP

MVSF220FP

MVS220CF

MVSMT220FP

2" MANIFOLD STUBBY VALVES

PART NO	DESCRIPTION	MAX PSI	PIPE SIZE	OPENING THRU BALL	LOT QTY	REPLACEMENT HANDLE	REPAIR KIT
VSMT200CF	2" STANDARD PORT MANIFOLD VALVE FLANGE X MALE NPT W/TFE SEALS	150	2"	1½"	6	VS20152SH	N/A
VSF200CF	2" STANDARD PORT MANIFOLD VALVE FLANGE X MALE ADAPTER W/TFE SEALS	100	2"	1½"	6	VS20152SH	N/A
MVS220FP	2" FULL PORT MANIFOLD VALVE FLANGE X FEMALE NPT W/FKM SEALS	300	2"	2"	6	VS25153	VS25200
MVSF220FP	2" FULL PORT MANIFOLD VALVE FLANGE X MALE ADAPTER W/FKM SEALS	150	2"	2"	9	VS25153	VS25200
MVS220CF	2" FULL PORT MANIFOLD VALVE FLANGE X FLANGE W/FKM SEALS	150	2"	2"	9	VS25153	VS25200
MVSMT220FP	2" FULL PORT MANIFOLD VALVE FLANGE X MALE NPT W/FKM SEALS	225	2"	2"	9	VS25153	VS25200

Note: N/A repair kits, components available.

2" FP STUBBY STAINLESS STEEL VALVE

VSFMT220SS

FEATURES

- PTFE seals, no elastomers
- Self-aligning ball moves freely against the PTFE seats for smooth operation. The valve opens and closes with very little pressure on the handle
- PTFE self-lubricating stem bushings and seats cannot stick or bind

2" FULL PORT STUBBY STAINLESS STEEL VALVE

PART NO	DESCRIPTION	MAX PSI	PIPE SIZE	OPENING THRU BALL	QTY	REPLACEMENT HANDLE	REPAIR KIT
VSFMT220SS	2" FULL PORT STUBBY SS VALVE MALE THREAD X MALE ADAPTER	225	2"	2"	1	VSS20153	VSS25200

3" STUBBY VALVES

FEATURES

- FKM seals.
- Precision molded polypropylene is reinforced with fiberglass for additional strength.
- Self-aligning ball moves freely against the PTFE seats for smooth operation. The valve opens and closes with very little pressure on the handle.
- Ball is diamond turned, after molding, to make it spherically perfect, which provides precise contact between ball and seats.
- PTFE self-lubricating stem bushings and seats cannot stick or bind.
- Stainless steel bolts.

MVSF300

MVSF300FP

MVSMT300

MVS300CF

MVS300CFFP

3" MANIFOLD STUBBY VALVES

PART NO	DESCRIPTION	MAX PSI	PIPE SIZE	OPENING THRU BALL	LOT QTY	REPLACEMENT HANDLE	REPAIR KIT
MVSF300	3" STANDARD PORT MANIFOLD VALVE FLANGE X MALE ADAPTER	100	3"	2½"	6/BOX	V25153	N/A
MVSF300FP	3" FULL PORT MANIFOLD VALVE FLANGE X MALE ADAPTER	100	3"	3"	6/BOX	V25153	VS35200
MVSMT300	3" STANDARD PORT MANIFOLD VALVE FLANGE X MALE NPT	225	3"	2½"	4	V25153	N/A
MVS300CF	3" STANDARD PORT MANIFOLD VALVE FLANGE X FLANGE	200	3"	2½"	6/BOX	V25153	N/A
MVS300CFFP	3" FULL PORT MANIFOLD VALVE FLANGE X FLANGE	150	3"	3"	6/BOX	V25153	VS35200

Note: N/A repair kits, components available.

3" FP STUBBY VALVES WITH STAINLESS STEEL

FEATURES

- Precision molded polypropylene is reinforced with fiberglass for additional strength.
- Self-aligning ball moves freely against the PTFE seats for smooth operation. The valve opens and closes with very little pressure on the handle.
- Ball is diamond turned, after molding, to make it spherically perfect, which provides precise contact between ball and seats.
- Stainless steel bolts
- Compact design
- FKM seals

MVS300HSFP

MVSMT300HSFP

3" FULL PORT MANIFOLD STUBBY VALVES WITH SS

PART NO	DESCRIPTION	MAX PSI	PIPE SIZE	OPENING THRU BALL	QTY	REPLACEMENT HANDLE
MVS300HSFP	3" FULL PORT MANIFOLD STUBBY VALVE FLANGE X FLANGE WITH SS BALL, STEM & HANDLE	100	3"	3"	1	VS30153SS
MVSMT300HSFP	3" FULL PORT MANIFOLD STUBBY VALVE MALE NPT X FLANGE WITH SS BALL, STEM & HANDLE	200	3"	3"	1	VS30153SS

3 WAY BOTTOM LOAD BALL VALVES

FEATURES

- Stainless steel bolts
- Precision molded in fiberglass reinforced polypropylene for additional strength
- Self-aligning ball moves freely against the PTFE seats for smooth operation
- Ball is diamond turned after molding to make it spherically perfect, which provides precise contact between ball and seats
- PTFE self-lubricating stem bushings and seats
- FKM body seals
- Directional flow, right or left. Valve can be turned off to stop flow

REPAIR KIT INCLUDES:

- Ball
- Body gasket
- Thrust washer
- Ball seats
- Upper stem bushing
- Stem o-ring

MV100BL MV200BL MV220BL MV300BL

3 WAY BOTTOM LOAD MANIFOLD VALVES

PART NO	DESCRIPTION	MAX PSI	PIPE SIZE	OPENING THRU BALL	LOT QTY	HANDLE TYPE	REPLACEMENT HANDLE	REPAIR KIT
MV100BL	1" FP 3-WAY BOTTOM LOAD MANIFOLD VALVE	300	1"	1"	6	T	N/A	N/A
MV200BL	2" SP 3-WAY BOTTOM LOAD MANIFOLD VALVE	225	2"	1½"	6	T	V20353TB	V15300SL
MV220BL	2" FP 3-WAY BOTTOM LOAD MANIFOLD VALVE	150	2"	2"	8/BOX	STRAIGHT	V25353B	N/A
MV300BL	3" FP 3-WAY BOTTOM LOAD MANIFOLD VALVE	150	3"	3"	4/BOX	STRAIGHT	V25353B	V35200BL

3 WAY SIDE LOAD BALL VALVES

FEATURES

- Stainless steel bolts
- Precision molded in fiberglass reinforced polypropylene for additional strength
- Self-aligning ball moves freely against the PTFE seats for smooth operation
- Ball is diamond turned after molding to make it spherically perfect, which provides precise contact between ball and seats
- PTFE self-lubricating stem bushings and seats
- FKM body seals
- Directional flow, right or left. Valve cannot be turned off to stop flow

MV100SL MV200SL MV220SL

3 WAY SIDE LOAD MANIFOLD VALVES

PART NO	DESCRIPTION	MAX PSI	PIPE SIZE	OPENING THRU BALL	LOT QTY	HANDLE TYPE	REPLACEMENT HANDLE	REPAIR KIT
MV100SL	1" FP 3-WAY SIDE LOAD MANIFOLD VALVE	300	1"	1"	6	T	N/A	N/A
MV200SL	2" SP 3-WAY SIDE LOAD MANIFOLD VALVE	225	2"	1½"	5	STRAIGHT	V20153SH	V15300SL
MV220SL	2" FP 3-WAY SIDE LOAD FULL PORT MANIFOLD VALVE	100	2"	2"	8/BOX	STRAIGHT	V25153SH	V25200BL

PRESSURE SPIKE VALVES

FEATURES

- FKM seals.
- Precision molded polypropylene is reinforced with fiberglass for additional strength.
- 360° orientation
- Preset pressure spring

MANIFOLD PRESSURE SPIKE VALVES

PART NO	DESCRIPTION	CRACKING PRESSURE	MAX PSI	QTY
MPRV100-050	1" X 1" MANIFOLD PRESSURE SPIKE VALVE	50	300	1
MPRV100-075	1" X 1" MANIFOLD PRESSURE SPIKE VALVE	75	300	1
MPRV100-100	1" X 1" MANIFOLD PRESSURE SPIKE VALVE	100	300	1
MPRV100-125	1" X 1" MANIFOLD PRESSURE SPIKE VALVE	125	300	1

DRY-MATE™ DRY-DISCONNECTS

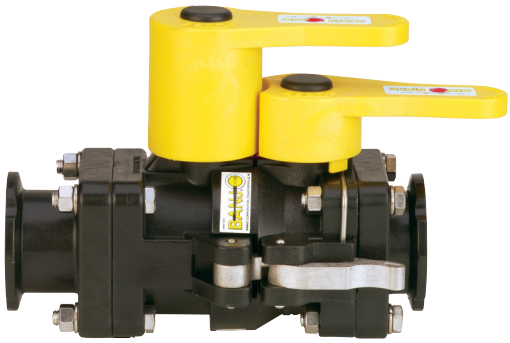

FEATURES

- Easy to use
- Minimal fluid spillage
- Reduces risk of exposure
- Wide range of chemical resistance
- When properly installed and operated, the assembly will not accidentally separate while fluid is flowing; preventing costly mishaps.
- Spillage data:2"=4ml, 3"=15ml

REPAIR KIT INCLUDES:

- Face seal
- Ball
- Seats
- Body gasket
- Thrust bearings
- Stem bushings

MANIFOLD DRY DISCONNECTS

PART NO	DESCRIPTION	MAX PSI	PIPE SIZE	OPENING THRU BALL	QTY	REPLACEMENT HANDLE	REPAIR KIT
DM200ACF	2" MALE MANIFOLD DRY-MATE WITH FKM SEALS	100	2"	1½"	1	DM20153M	DM20200A
DM200DCF	2" FEMALE MANIFOLD DRY-MATE WITH FKM SEALS	100	2"	1½"	1	DM20153F	DM20200D
DM300ACF	3" MALE MANIFOLD DRY-MATE WITH FKM SEALS	150	3"	3"	1	DM35153M	DM35200
DM300DCF	3" FEMALE MANIFOLD DRY-MATE WITH FKM SEALS	150	3"	3"	1	DM35153F	DM35200

Note: Male and female sold separately

BOOM NOZZLE PIPE ADAPTER

FEATURES

- Eliminates having to thread pipe
- Quick and easy assembly
- No welding necessary
- 360° orientation

M100PA

M100PAC

M100PAT

BOOM NOZZLE PIPE ADAPTER

PART NO	DESCRIPTION	MAX PSI	LOT QTY
M100PA	1" FLANGED PIPE ADAPTER	300	10
M100PAC	1" FLANGED PIPE ADAPTER CAP	300	1
M100PAT	1" FLANGED PIPE ADAPTER TEE	300	1

INDUCTORS

FEATURES

- Threaded or manifold ends
- Glass reinforced polypropylene
- Designed for use with a volume pump. Typical volumes (80-240 US GPM) and pressures (26-52 PSI) should be used to operate the inductor.

HV200

MHV220A

MANIFOLD INDUCTORS

PART NO	DESCRIPTION	PRESSURE AT PUMP	VOLUME DRAW	OPENING SIZE	LOT QTY
HV200	2" MPT INDUCTOR	225	49 GPM	7/16"	1
MHV200	2" MANIFOLD INDUCTOR WITH 1½" PORT	300	37 GPM	5/16"	1
MHV220A	2" FULL PORT MANIFOLD INDUCTOR	225	49 GPM	9/16"	5

INDUCTOR SYSTEMS

FEATURES

- Installed after pump; suction completely empties inductor tank
- Keeps pump free of chemicals
- Easy assembly/installation with manifold connections found on pages 39-45.
- Choose your connections and valve
- Tank for illustration purposes only, not included

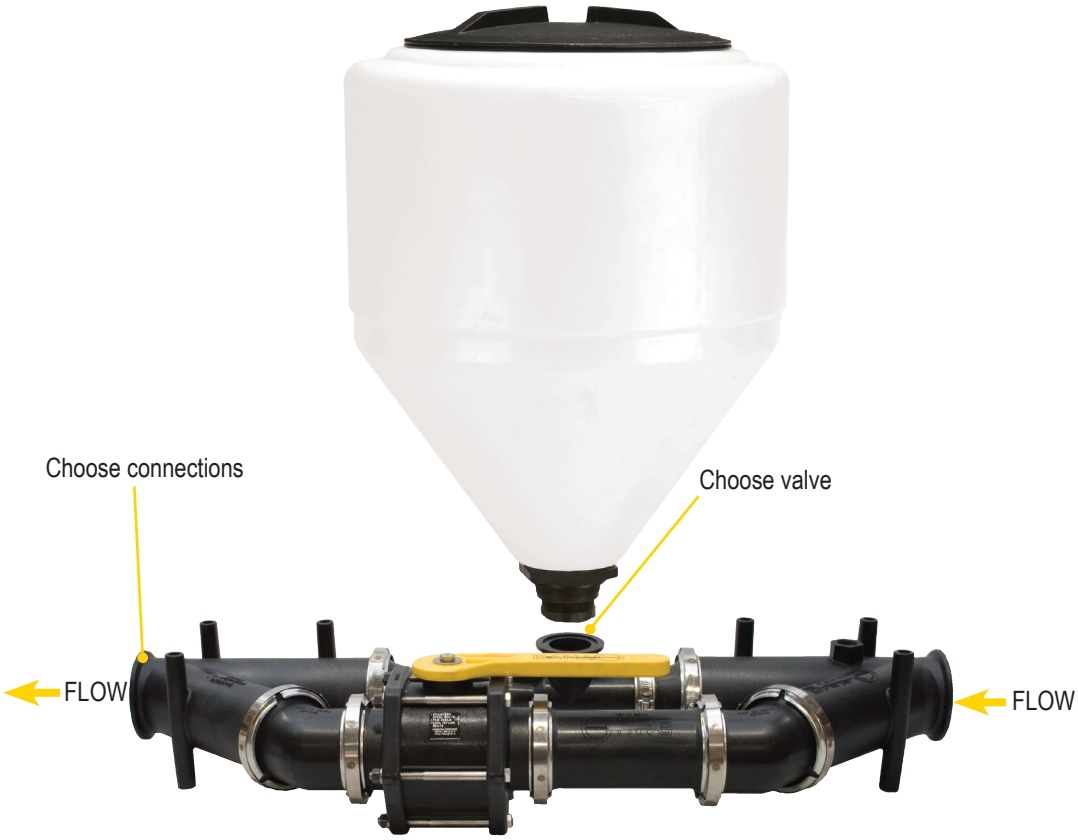

MANIFOLD INDUCTOR SYSTEMS

PART NO	DESCRIPTION	MAX PSI	QTY
MIS220	2" FULL PORT MANIFOLD INDUCTOR SYSTEM FLANGE X FLANGE ASSEMBLED	225	1
MIS300	3" FULL PORT MANIFOLD INDUCTOR SYSTEM FLANGE X FLANGE ASSEMBLED	150	1

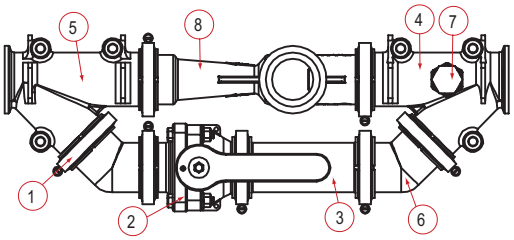

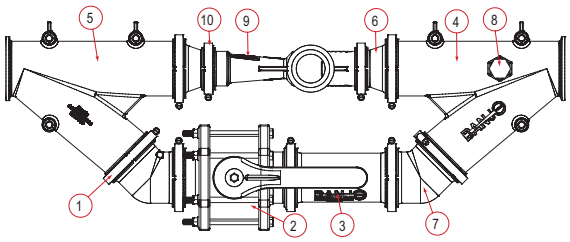

MANIFOLD INDUCTORS

ITEM	PART NO	DESCRIPTION	LOT QTY
1	FC220	220 SERIES WORM SCREW CLAMP	10/BAG
2	MVS220CF	2" FP FLANGE X 2" FP FLANGE	9
3	M220CPG6	2" X 2" FULL PORT FLANGE X 6"	5
4	M220YG45	2" FULL PORT 45° Y FLANGE W/ ¾" GAUGE PORT*	1
5	M220Y45	2" FULL PORT 45° Y FLANGE	5
6	M220CPG45	2" FULL PORT 45° COUPLING	10/BAG
7	PLUG075	¾" PIPE PLUG	10/BAG
8	MHV220A	2" FULL PORT POLY VENTURI	5
N/S	M221G	2" FULL PORT EPDM MANIFOLD GASKET WITH RIB	30

MANIFOLD INDUCTORS

ITEM	PART NO	DESCRIPTION	LOT QTY
1	FC300	300 SERIES WORM SCREW CLAMP	10/BAG
2	MV301CF	3" FP FLANGE X 3" FP FLANGE	1
3	M300CPG7	3" X 3" FULL PORT FLANGE X 7"	5
4	M300YG45	3" FULL PORT 45° Y FLANGE W/ ¾" GAUGE PORT*	1
5	M300Y45	3" FULL PORT 45° Y FLANGE	1
6	M300220CPG	3" X 2" FULL PORT REDUCER FLANGE	10
7	M300CPG45	3" FULL PORT 45° COUPLING	10
8	PLUG075	¾" PIPE PLUG	10/BAG
9	MHV220A	2" FULL PORT POLY VENTURI	5
10	FC220	220 SERIES WORM SCREW CLAMP	10/BAG
N/S	M221G	2" FULL PORT EPDM MANIFOLD GASKET WITH RIB	30
N/S	M301G	3" EPDM MANIFOLD GASKET WITH RIB	50

***Note:** Gauge not included.

FLOW METERS

FEATURES

- Displays overall total volume and batch total volume
- Flow rate allows for Gallons or Liters per minute
- The display reads 6 digits for rate, 8 digits for total and 1 decimal place reading in tenths
- Magnetic style meter with stainless steel electrodes
- Self calibrating meter
- Measures water and most conductive liquids
- Easy to change six (6) AA batteries
- No moving parts to fail during use
- Glass-reinforced polypropylene
- Temperature range from 0°F to 150°F
- ±1% of reading (between 10% and 100% of maximum flow)
- ±3% of reading (between cutoff and 10% of maximum flow)
- There are 3 photoeyes located on the face of the flow meter. These are not push buttons; to activate you must hold your finger over the photoeye for 2-4 seconds
- Flow meters will not read petroleum based liquids
- It is recommended to have at least 10X the diameter of straight pipe before and after the flow meter

MFM100

MFM220

MFM300

FLOW METERS				
PART NO	DESCRIPTION	MAX PSI	GPM	QTY
MFM100	1" FULL PORT MANIFOLD FLOW METER	200	110 GPM	1
MFM220	2" FULL PORT MANIFOLD FLOW METER	200	300 GPM	1
MFM300	3" FULL PORT FLOW METER	200	670 GPM	1

M100125BRBSWP90

M100BRBSWP90

M100BRBSWPG90

M100SWP90

M100SWPG90

M200SWP90

M220200SWP90

M220ASWP90

M220BRBSWP90

M220MPTSWP90

M220SWP90

M220SWPG90

M300ASWP90

M300BRBSWP90

M300MPTSWP90

M300SWP90

M300SWPG90

M300220SWP90

SWEEPS

PART NO	DESCRIPTION	MAX PSI	LOT QTY
M100125BRBSWP90	1" FLANGE X 1¼" HOSE BARB SWEEP	300	10/BAG
M100BRBSWP90	1" FLANGE X HOSE BARB SWEEP	300	10/BAG
M100BRBSWPG90	1" FULL PORT FLANGE X 1" HOSE BARB SWEEP W/ ¼" GAUGE PORT	300	10/BAG
M100SWP90	1" FLANGE X FLANGE SWEEP	300	10/BAG
M100SWPG90	1" FLANGE X FLANGE SWEEP W/ ¼" GAUGE PORT	300	10/BAG
M200SWP90	2" FLANGE X FLANGE SWEEP	300	10/BAG
M200150BRBSWP90	2" FLANGE X 1½" HOSE BARB SWEEP	300	10/BAG
M220200SWP90	2" FULL PORT FLANGE X 2" FLANGE SWEEP	300	10/BAG
M220ASWP90	2" FULL PORT FLANGE X MALE ADAPTER SWEEP	200	10/BAG
M220BRBSWP90	2" FULL PORT FLANGE X HOSE BARB SWEEP	300	10
M220MPTSWP90	2" FULL PORT FLANGE X MALE NPT THREAD SWEEP	300	1
M220SWP90	2" FULL PORT FLANGE X FLANGE SWEEP	300	10/BAG
M220SWPG90	2" FULL PORT FLANGE X FLANGE SWEEP W/ ¼" GAUGE PORT	300	1
M300ASWP90	3" FLANGE X MALE ADAPTER SWEEP	100	1
M300BRBSWP90	3" FLANGE X HOSE BARB SWEEP	225	10
M300MPTSWP90	3" FLANGE X MALE NPT THREAD SWEEP	200	1
M300SWP90	3" FLANGE X FLANGE SWEEP	200	10
M300SWPG90	3" FLANGE X FLANGE SWEEP W/ ¼" GAUGE PORT	200	1
M300220SWP90	3" FULL PORT FLANGE X 2" FULL PORT FLANGE SWEEP	300	1

SWEEPS

FEATURES

- Direct replacement for standard 90° flanged couplings
- Positive seals
- Quick and easy assembly
- Easy on/off hose connections
- 360° orientation
- Improved flow for max GPM

FITTINGS

FEATURES

- Quick and easy assembly
- Positive seals
- Easy on/off hose connections
- 360° orientation
- Where noted, parts must be ordered in bag quantities.

SWIVEL

PART NO	DESCRIPTION	MAX PSI	QTY
MSW220	2" FULL PORT MANIFOLD FLANGE SWIVEL	200	1

CHECK VALVES

PART NO	DESCRIPTION	OPENING PRESSURE PSI	MAX PSI	LOT QTY
MCV100	1" FLANGED CHECK VALVE	1	300	10
MCV200	2" FLANGED CHECK VALVE	0.5	300	10
MCV221	2" FULL PORT FLANGED CHECK VALVE	>0.5	200	10
MCV300	3" FLANGED CHECK VALVE W/5 LB SPRING	1.5	200	1
MCV301	3" FLANGED CHECK VALVE W/½ LB SPRING	>0.5	N/A	1

PVC GLUE SOCKET

PART NO	DESCRIPTION	MAX PSI	LOT QTY
M221GSA	2" FULL PORT FLANGE X 2" PVC GLUE SOCKET FITTING	300	10
M301GSA	3" FULL PORT FLANGE X 3" PVC GLUE SOCKET FITTING	300	1

316 SS SOCKET WELD

PART NO	DESCRIPTION	MAX PSI	LOT QTY
M100SWFSS	1" FLANGE X 1" SOCKET WELD FITTING	300	10
M200SWFSS	2" FLANGE X 2" SOCKET WELD FITTING	300	1
M220SWFSS	2" FULL PORT FLANGE X 2" SOCKET WELD FITTING	300	10
M220375SWFSS	2" FULL PORT FLANGE X 2" SOCKET WELD FITTING X 3¾"	300	1
M300SWFSS	3" FLANGE X 3" SOCKET WELD FITTING	300	10
M300375SWFSS	3" FLANGE X 3" SOCKET WELD FITTING X 3¾"	300	1

COUPLINGS

PART NO	DESCRIPTION	MAX PSI	LOT QTY
M100CPG	1" X 1" FLANGE X 2¼" LONG	300	10/BAG
M200CPG	2" X 2" FLANGE X 4½" LONG	300	10/BAG
M220CPG	2" X 2" FULL PORT FLANGE X 2 $^{31}/_{32}$" LONG	300	10/BAG
M220CPG3G	2" X 2" FULL PORT FLANGE X 3" LONG WITH ½" GAUGE PORT	225	1
M220CPG6	2" X 2" FULL PORT FLANGE X 6" LONG	300	5
M300CPG	3" X 3" FULL PORT FLANGE X 4" LONG	200	10
M300CPG7	3" X 3" FULL PORT FLANGE X 7" LONG	225	5
M300CPG12	3" X 3" FULL PORT FLANGE X 12" LONG	150	1

45° COUPLINGS

PART NO	DESCRIPTION	MAX PSI	LOT QTY
M100CPG45	1" X 1" 45° FLANGE	300	10/BAG
M200CPG45	2" X 2" 45° FLANGE	300	10/BAG
M220CPG45	2" X 2" FULL PORT 45° FLANGE	225	10/BAG
M300CPG45	3" X 3" FULL PORT 45° FLANGE	225	10

90° COUPLINGS

PART NO	DESCRIPTION	MAX PSI	LOT QTY
M100CPG90	1" X 1" 90° FLANGE	300	10/BAG
M200CPG90	2" X 2" 90° FLANGE	300	10/BAG
M200CPG90SH	2" X 2" 90° SHORT FLANGE	300	10/BAG
M220CPG90	2" X 2" 90° FULL PORT FLANGE	200	10/BAG
M300CPG90	3" X 3" 90° FULL PORT FLANGE	200	5

45° Y FLANGED COUPLINGS

PART NO	DESCRIPTION	MAX PSI	LOT QTY
M220Y45	2" FULL PORT 45° Y FLANGE	300	5
M220YG45	2" FULL PORT 45° Y FLANGE W/ ¾" GAUGE PORT	225	1
M300Y45	3" FULL PORT 45° Y FLANGE	200	1
M300YG45	3" FULL PORT 45° Y FLANGE W/ ¾" GAUGE PORT	200	1

3" MANIFOLD WYE

PART NO	DESCRIPTION	MAX PSI	QTY
M300220WYCG	M300 X M220 X M220 X M220 FULL PORT FLANGE WYE W/ ¼" GAUGE PORT	300	1

REDUCER COUPLINGS

PART NO	DESCRIPTION	MAX PSI	LOT QTY
M200100CPG	2" X 1" REDUCER FLANGE	300	10/BAG
M220100CPG	2" FULL PORT X 1" REDUCER FLANGE	225	10/BAG
M220200CPG	2" FULL PORT X 2" REDUCER FLANGE	225	10/BAG
M300200CPG	3" X 2" REDUCER FLANGE	225	10/BAG
M300220CPG	3" X 2" FULL PORT REDUCER FLANGE	225	10

TEES

PART NO	DESCRIPTION	MAX PSI	LOT QTY
M100TEE	1" FLANGED TEE	300	10/BAG
M101TEE	1" FLANGED TEE LONG	300	10
M200100TEE	2" X 1" FLANGED TEE	300	10
M200TEE	2" FLANGED TEE	200	10/BAG
M220100TEE	2" FULL PORT FLANGED TEE X 1" FLANGED TEE	225	10
M220200TEE	2" FULL PORT FLANGED TEE X 2" FLANGED TEE	300	10
M220TEE	2" FULL PORT FLANGED TEE	225	10
M300TEE	3" FLANGED TEE	225	10

U BOLTS

PART NO	DESCRIPTION	MAX PSI	LOT QTY
UB100	100 SERIES MOUNTING U BOLT	N/A	1
UB202	2 SERIES MOUNTING U BOLT	N/A	10
UB220	220 SERIES MOUNTING U BOLT	N/A	10

FITTINGS

FEATURES

- Quick and easy assembly
- Positive seals
- Easy on/off hose connections
- 360° orientation
- Where noted, parts must be ordered in bag quantities

FITTINGS

FEATURES

- Quick and easy assembly
- Positive seals
- Easy on/off hose connections
- 360° orientation
- Where noted, parts must be ordered in bag quantities.

SS BUTT WELD ADAPTER

PART NO	DESCRIPTION	MAX PSI	QTY
M220BWASS	2" FULL PORT STAINLESS STEEL BUTT WELD ADAPTER	300	1

FEMALE NPT THREAD

PART NO	DESCRIPTION	MAX PSI	LOT QTY
M100050FPT	1" FLANGE X ½" FEMALE THREAD	300	10/BAG
M100075FPT	1" FLANGE X ¾" FEMALE THREAD	300	10/BAG
M100FPT	1" FLANGE X 1" FEMALE THREAD	300	10/BAG
M200FPT	2" FLANGE X 2" FEMALE THREAD	300	10/BAG
M200150FPT	2" FLANGE X 1½" FEMALE THREAD	300	10/BAG
M220FPT	2" FULL PORT FLANGE X 2" FEMALE THREAD	300	10/BAG
M300FPT	3" FLANGE X 3" FEMALE THREAD	200	10/BAG

MALE THREAD

PART NO	DESCRIPTION	MAX PSI	LOT QTY
M100075MPT	1" FLANGE X ¾" MALE THREAD	300	10/BAG
M100MPT	1" FLANGE X 1" MALE THREAD	300	10/BAG
M100125MPT	1" FLANGE X 1¼" MALE THREAD	300	10/BAG
M200125MPT	2" FLANGE X 1¼" MALE THREAD	300	10/BAG
M200150MPT	2" FLANGE X 1½" MALE THREAD	300	10/BAG
M200MPT	2" FLANGE X 2" MALE THREAD	300	10/BAG
M220MPT	2" FULL PORT FLANGE X 2" MALE THREAD	300	10/BAG
M300MPT	3" FLANGE X 3" MALE THREAD	300	10

316 SS MALE THREAD

PART NO	DESCRIPTION	MAX PSI	QTY
M100MPTSS	1" FLANGE X 1" MALE THREAD	300	1
M200125MPTSS	2" FLANGE X 1¼" MALE THREAD	300	1
M200150MPTSS	2" FLANGE X 1½" MALE THREAD	300	1
M200MPTSS	2" FLANGE X 2" MALE THREAD	300	1
M220150MPTSS	2" FULL PORT FLANGE X 1½" MALE THREAD	300	1
M220MPTSS	2" FULL PORT FLANGE X 2" MALE THREAD	300	1
M300220MPTSS	3" FLANGE X 2" FULL PORT MALE THREAD	300	1
M300MPTSS	3" FLANGE X 3" MALE THREAD	300	1

PLUGS

PART NO	DESCRIPTION	MAX PSI	LOT QTY
M100PLG	1" FLANGE PLUG	300	10/BAG
M200PLG	2" FLANGE PLUG	300	10/BAG
M220PLG	2" FULL PORT FLANGE PLUG	300	10/BAG
M300PLG	3" FULL PORT FLANGE PLUG	225	10/BAG
M100PLG025	1" FLANGE PLUG WITH ¼" FPT	300	10/BAG
M100PLG050	1" FLANGE PLUG WITH ½" FPT	300	10/BAG
M200PLG025	2" FLANGE PLUG WITH ¼" FPT	225	10/BAG
M200PLG038	2" FLANGE PLUG WITH ⅜" FPT	300	10/BAG
M200PLG050	2" FLANGE PLUG WITH ½" FPT	225	10/BAG
M200PLG075	2" FLANGE PLUG WITH ¾" FPT	225	10/BAG
M200PLG100	2" FLANGE PLUG WITH 1" FPT	225	10/BAG
M220PLG038	2" FULL PORT FLANGE PLUG WITH ⅜" FPT	150	10/BAG
M220PLG075	2" FULL PORT FLANGE PLUG WITH ¾" FPT	225	10/BAG
M300PLG075	3" FLANGE PLUG WITH ¾" FPT	200	10/BAG
M300PLG100	3" FLANGE PLUG WITH 1" FPT	200	1

FEMALE COUPLER

PART NO	DESCRIPTION	MAX PSI	LOT QTY
M220D	2" FULL PORT FLANGE X 2" FEMALE COUPLER	225	20
M303D	3" FULL PORT FLANGE X 3" FEMALE COUPLER WITH 3 ARMS	225	10

MALE ADAPTER

PART NO	DESCRIPTION	MAX PSI	LOT QTY
M100A	1" FLANGE X 1" MALE ADAPTER	300	10/BAG
M200A	2" FLANGE X 2" MALE ADAPTER	300	10/BAG
M220A	2" FULL PORT FLANGE X 2" MALE ADAPTER	225	10/BAG
M300A	3" FULL PORT FLANGE X 3" MALE ADAPTER	100	10

CROSS

PART NO	DESCRIPTION	MAX PSI	LOT QTY
M100CR	1" FLANGED CROSS	300	10/BAG
M200CR	2" FLANGED CROSS	300	10
M220CR	2" FULL PORT FLANGED CROSS	200	10
M300CR	3" FLANGED CROSS	125	5

FEATURES

- Quick and easy assembly
- Positive seals
- Easy on/off hose connections
- 360° orientation
- Where noted, parts must be ordered in bag quantities

FITTINGS

FEATURES

- Quick and easy assembly
- Positive seals
- Easy on/off hose connections
- 360° orientation
- Where noted, parts must be ordered in bag quantities.

HOSE BARB

PART NO	DESCRIPTION	MAX PSI	LOT QTY
M100075BRB	1" FLANGE X ¾" HOSE BARB	300	10/BAG
M100BRB	1" FLANGE X 1" HOSE BARB	300	10/BAG
M100125BRB	1" FLANGE X 1¼" HOSE BARB	300	10/BAG
M200100BRB	2" FLANGE X 1" HOSE BARB	300	10/BAG
M200125BRB	2" FLANGE X 1¼" HOSE BARB	300	10/BAG
M200150BRB	2" FLANGE X 1½" HOSE BARB	300	10/BAG
M200BRB	2" FLANGE X 2" HOSE BARB	300	10/BAG
M220100BRB	2" FULL PORT FLANGE X 1" HOSE BARB	300	10/BAG
M220125BRB	2" FULL PORT FLANGE X 1¼" HOSE BARB	300	10/BAG
M220150BRB	2" FULL PORT FLANGE X 1½" HOSE BARB	300	10/BAG
M220BRB	2" FULL PORT FLANGE X 2" HOSE BARB	300	10/BAG
M300220BRB	3" FLANGE X 2" FULL PORT HOSE BARB	125	10
M300BRB	3" FLANGE X 3" HOSE BARB	200	10

90° HOSE BARB ELBOW

PART NO	DESCRIPTION	MAX PSI	LOT QTY
M100075BRB90	1" FLANGE X ¾" 90° HOSE BARB	300	10/BAG
M100BRB90	1" FLANGE X 1" 90° HOSE BARB	300	10/BAG
M100125BRB90	1" FLANGE X 1¼" 90° HOSE BARB	300	10/BAG
M100150BRB90	1" FLANGE X 1½" 90° HOSE BARB	300	10/BAG
M200100BRB90	2" FLANGE X 1" 90° HOSE BARB	300	10/BAG
M200125BRB90	2" FLANGE X 1¼" 90° HOSE BARB	300	10/BAG
M200150BRB90	2" FLANGE X 1½" 90° HOSE BARB	300	10/BAG
M200BRB90	2" FLANGE X 2" 90° HOSE BARB	300	10/BAG
M220150BRB90	2" FULL PORT FLANGE X 1½" 90° HOSE BARB	300	10/BAG
M220BRB90	2" FULL PORT FLANGE X 2" 90° HOSE BARB	300	10/BAG
M300220BRB90	3" FLANGE X 2" 90° FULL PORT HOSE BARB	300	1
M300BRB90	3" FLANGE X 3" 90° HOSE BARB	150	10

45° HOSE BARB ELBOW

PART NO	DESCRIPTION	MAX PSI	LOT QTY
M100BRB45	1" FLANGE X 1" 45° HOSE BARB ELBOW	300	10/BAG
M200BRB45	2" FLANGE X 2" 45° HOSE BARB ELBOW	300	10/BAG
M200125BRB45	2" FLANGE X 1¼" 45° HOSE BARB ELBOW	300	10/BAG
M200150BRB45	2" FLANGE X 1½" 45° HOSE BARB ELBOW	300	10/BAG
M220BRB45	2" FULL PORT FLANGE X 2" 45° HOSE BARB ELBOW	300	10/BAG
M300BRB45	3" FLANGE X 3" 45° HOSE BARB ELBOW	150	10

HOSE BARB TEE

PART NO	DESCRIPTION	MAX PSI	LOT QTY
M100050HBT	1" FLANGE X ½" HOSE BARB TEE	N/A	10/BAG
M100075HBT	1" FLANGE X ¾" HOSE BARB TEE	N/A	10/BAG
M100100HBT	1" FLANGE X 1" HOSE BARB TEE	300	10/BAG
M220200HBT	2" FULL PORT FLANGE X 2" HOSE BARB TEE	300	10/BAG
M300300HBT	3" FLANGE X 3" HOSE BARB TEE	150	10/BAG

BOLTED FLANGE CLAMPS

PART NO	DESCRIPTION	TORQUE	QTY
FC220B	2" FULL PORT BOLTED FLANGE CLAMP	150 IN/LBS	1
FC300B	3" BOLTED FLANGE CLAMP	150 IN/LBS	1

T-BOLT FLANGE CLAMPS

PART NO	DESCRIPTION	TORQUE	QTY
FC220TB	2" FULL PORT HI-TORQUE T-BOLT FLANGE CLAMP	100 IN/LBS	10/BAG
FC300TB	3" FULL PORT HI-TORQUE T-BOLT FLANGE CLAMP	100 IN/LBS	10/BAG

FLANGE CLAMPS

PART NO	DESCRIPTION	TORQUE	QTY
FC100	100 SERIES WORM SCREW CLAMP	50-60 IN/LBS	10/BAG
FC200	200 SERIES WORM SCREW CLAMP	90-100 IN/LBS	10/BAG
FC220	220 SERIES WORM SCREW CLAMP	90-100 IN/LBS	10/BAG
FC300	300 SERIES WORM SCREW CLAMP	90-100 IN/LBS	10/BAG

Rib keeps gasket in place during assembly.

GASKETS

PART NO	DESCRIPTION	GASKET MATERIAL	LOT QTY
M100G	100 SERIES MANIFOLD GASKET	EPDM	25
M101G	100 SERIES MANIFOLD GASKET WITH RIB	EPDM	35
M102G	1" & 1¼" SKIRTED FLANGE GASKET	EPDM	1
M100GV	100 SERIES GASKET	FKM	25
150G	200 SERIES GASKET	EPDM	25
150GV	200 SERIES GASKET	FKM	25
200G	220 SERIES FULL PORT GASKET	EPDM	25
200GV	220 SERIES FULL PORT GASKET	FKM	25
M201G	200 SERIES MANIFOLD GASKET WITH RIB	EPDM	30
M202G	1½" SKIRTED FLANGE GASKET	EPDM	1
M221G	220 SERIES FULL PORT MANIFOLD GASKET WITH RIB	EPDM	30
M222G	2" SKIRTED FLANGE GASKET	EPDM	1
300G	300 SERIES GASKET	EPDM	25
300GV	300 SERIES GASKET	FKM	25
M301G	300 SERIES MANIFOLD GASKET WITH RIB	EPDM	50
M302G	3" SKIRTED FLANGE GASKET	EPDM	1

M302G

M201G

200G

200GV

FITTINGS

FEATURES

- Quick and easy assembly
- Positive seals
- Easy on/off hose connections
- 360° orientation
- Where noted, parts must be ordered in bag quantities

1"-2" T LINE STRAINERS

FEATURES

- EPDM gaskets
- Poly ribbed 316 stainless steel screens

1" FULL PORT MANIFOLD T LINE STRAINERS

PART NO	DESCRIPTION	MAX PSI	QTY
MLST100-30	1" MANIFOLD T STRAINER W/30 MESH SCREEN	300	1
MLST100-50	1" MANIFOLD T STRAINER W/50 MESH SCREEN	300	1
MLST100-80	1" MANIFOLD T STRAINER W/80 MESH SCREEN	300	1
MLST100-100	1" MANIFOLD T STRAINER W/100 MESH SCREEN	300	1

2" STANDARD PORT MANIFOLD T LINE STRAINERS

PART NO	DESCRIPTION	MAX PSI	QTY
MLST150-30	2" MANIFOLD T STRAINER W/30 MESH SCREEN	225	1
MLST150-50	2" MANIFOLD T STRAINER W/50 MESH SCREEN	225	1
MLST150-80	2" MANIFOLD T STRAINER W/80 MESH SCREEN	225	1
MLST150-80V	2" MANIFOLD T STRAINER W/80 MESH SCREEN WITH FKM GASKETS	225	1
MLST150-100	2" MANIFOLD T STRAINER W/100 MESH SCREEN	225	1

1"-2" Y LINE STRAINERS

FEATURES

- EPDM gaskets
- Poly ribbed 316 stainless steel screens

1" FULL PORT MANIFOLD Y LINE STRAINERS

PART NO	DESCRIPTION	MAX PSI	QTY
MLS100-80	1" MANIFOLD Y STRAINER W/80 MESH SCREEN	225	1

2" STANDARD PORT MANIFOLD Y LINE STRAINERS

PART NO	DESCRIPTION	MAX PSI	QTY
MLS200-06	2" MANIFOLD Y STRAINER W/6 MESH SCREEN	225	1
MLS200-12	2" MANIFOLD Y STRAINER W/12 MESH SCREEN	225	1
MLS200-20	2" MANIFOLD Y STRAINER W/20 MESH SCREEN	225	1
MLS200-30	2" MANIFOLD Y STRAINER W/30 MESH SCREEN	225	1
MLS200-50	2" MANIFOLD Y STRAINER W/50 MESH SCREEN	225	1
MLS200-80	2" MANIFOLD Y STRAINER W/80 MESH SCREEN	225	1

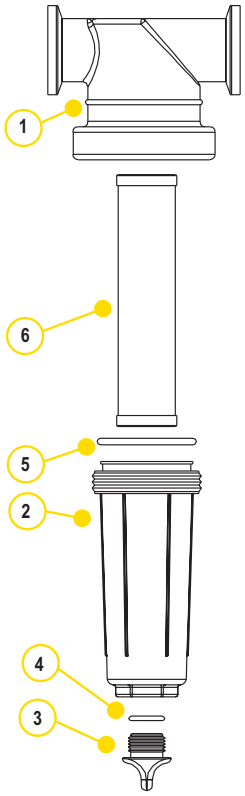

REPLACEMENT PARTS 1"

ITEM	PART NO	DESCRIPTION	QTY
1	MLST100-H	1" T BODY	1
2	LST100-B	1" T BOWL, DRAIN PLUG, O-RING	1
3	12777	½" PLUG	1
4	UV15163	O-RING	1
5	LST100-G	1" EPDM GASKET	1
5	LST100-GV	1" FKM GASKET	1
6	LST116	16 MESH SCREEN	1
6	LST130	30 MESH SCREEN	1
6	LST150	50 MESH SCREEN	1
6	LST180	80 MESH SCREEN	1
6	LST1100	100 MESH SCREEN	1
KIT	MLST100-HB	KIT INCLUDES ITEMS 1-5	1

REPLACEMENT PARTS 2"

ITEM	PART NO	DESCRIPTION	QTY
1	MLST150-H	1½" T BODY	1
2	LST150-B	1½" T BOWL, DRAIN PLUG, O-RING	1
3	LSQ200-PL	1½" PLUG	1
4	LSQ200-R	O-RING	1
5	LST150-G	1½" EPDM GASKET	1
5	LST150-GV	1½" FKM GASKET	1
6	LST1516	16 MESH SCREEN	1
6	LST1530	30 MESH SCREEN	1
6	LST1550	50 MESH SCREEN	1
6	LST1580	80 MESH SCREEN	1
6	LST15100	100 MESH SCREEN	1
KIT	MLST150-HB	KIT INCLUDES ITEMS 1-5	1

T LINE STRAINERS

SCREENS

MESH SIZE	RIB COLOR
16 MESH	BROWN RED
30 MESH	FLAME RED
50 MESH	GENTIAN BLUE
80 MESH	ZINC YELLOW
100 MESH	TRAFFIC GREEN

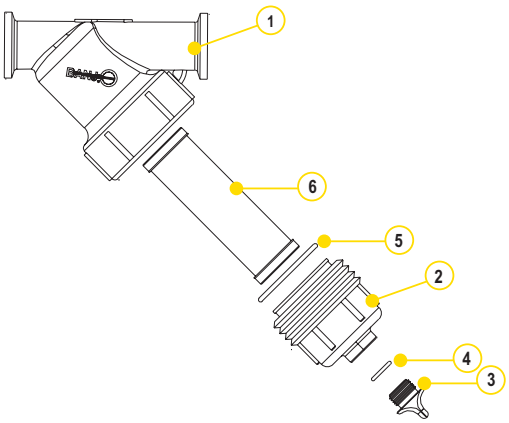

REPLACEMENT PARTS 1"

ITEM	PART NO	DESCRIPTION	QTY
1	MLS100B	1" Y BODY	1
2	LS100-C1	1" Y BOWL, DRAIN PLUG, O-RING	1
3	12777	½" PLUG	1
4	UV15163	O-RING	1
5	LS100-G	1" EPDM GASKET	1
6	LS120	20 MESH SCREEN	1
6	LS140	40 MESH SCREEN	1
6	LS180	80 MESH SCREEN	1
KIT	MLS100BC	KIT INCLUDES ITEMS 1-5	1

REPLACEMENT PARTS 2"

ITEM	PART NO	DESCRIPTION	QTY
1	MLS200B	2" Y BODY	1
2	LS150-C	2" Y BOWL, DRAIN PLUG, O-RING	1
3	LSQ200-PL	2" PLUG	1
4	LSQ200-R	O-RING	1
5	LS150-G	2" EPDM GASKET	1
5	LS150-GV	2" FKM GASKET	1
6	LS206	6 MESH SCREEN	1
6	LS212	12 MESH SCREEN	1
6	LS220	20 MESH SCREEN	1
6	LS230	30 MESH SCREEN	1
6	LS250	50 MESH SCREEN	1
6	LS280	80 MESH SCREEN	1
6	LS2120	120 MESH SCREEN	1
KIT	MLS200BC	KIT INCLUDES ITEMS 1-5	1

Y LINE STRAINERS

SCREENS

MESH SIZE	RIB COLOR
6 MESH	WHITE
12 MESH	BLACK
20 MESH	BEIGE
30 MESH	FLAME RED
40 MESH	BROWN
50 MESH	GENTIAN BLUE
80 MESH	ZINC YELLOW
100 MESH	TRAFFIC GREEN
120 MESH	BLACK

2" FULL PORT Y LINE STRAINERS

FEATURES

- EPDM gaskets
- 316 stainless steel screens

2" FULL PORT MANIFOLD Y LINE STRAINERS			
PART NO	DESCRIPTION	MAX PSI	QTY
MLS222-04	2" FULL PORT MANIFOLD Y STRAINER W/4 MESH SCREEN	225	1
MLS222-10	2" FULL PORT MANIFOLD Y STRAINER W/12 MESH SCREEN	225	1
MLS222-16	2" FULL PORT MANIFOLD Y STRAINER W/16 MESH SCREEN	225	1
MLS222-30	2" FULL PORT MANIFOLD Y STRAINER W/30 MESH SCREEN	225	1
MLS222-50	2" FULL PORT MANIFOLD Y STRAINER W/50 MESH SCREEN	225	1
MLS222-80	2" FULL PORT MANIFOLD Y STRAINER W/80 MESH SCREEN	225	1

3" Y LINE STRAINERS

FEATURES

- EPDM gaskets
- 304 stainless steel screens
- Must use on suction side or non-pressure side in all applications

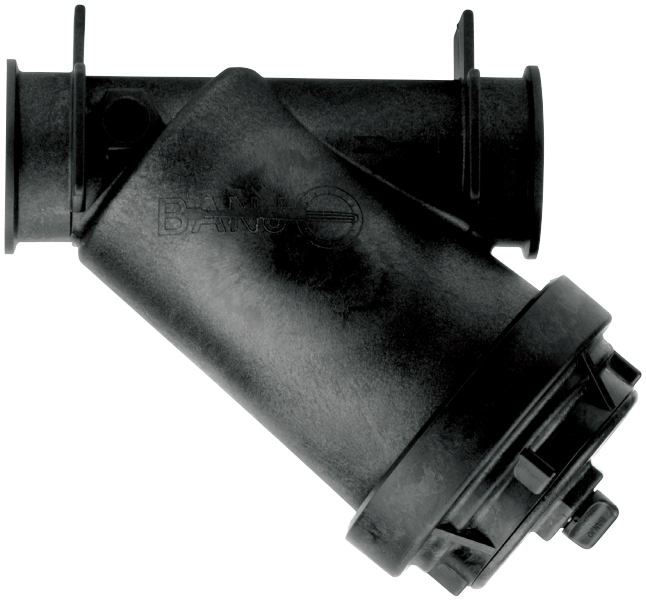

3" FULL PORT MANIFOLD Y LINE STRAINERS			
PART NO	DESCRIPTION	MAX PSI	LOT QTY
MLS300-12	3" MANIFOLD Y STRAINER W/12 MESH SCREEN	100	1
MLS300-20	3" MANIFOLD Y STRAINER W/20 MESH SCREEN	100	2
MLS300-50	3" MANIFOLD Y STRAINER W/50 MESH SCREEN	100	2

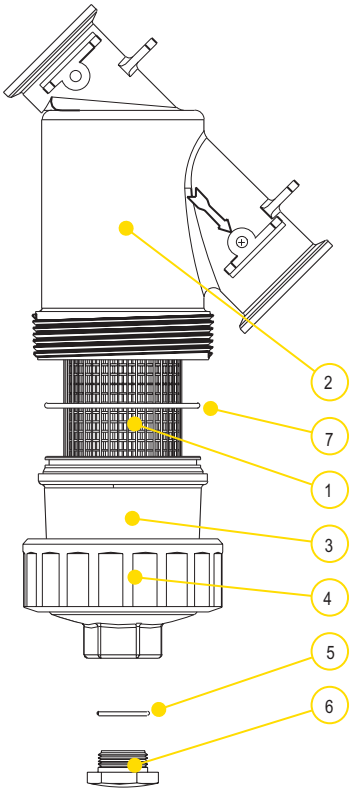

2" FULL PORT Y LINE STRAINERS

FEATURES

- EPDM gaskets
- 316 stainless steel screens

REPLACEMENT PARTS 2"

ITEM	PART NO	DESCRIPTION	QTY
1	LST204SS	4 SS MESH SCREEN	1
1	LST206SS	6 SS MESH SCREEN	1
1	LST208SS	8 SS MESH SCREEN	1
1	LST210SS	10 SS MESH SCREEN	1
1	LST216SS	16 SS MESH SCREEN	1
1	LST230SS	30 SS MESH SCREEN	1
1	LST250SS	50 SS MESH SCREEN	1
1	MLS250SS	50 SS MESH PERFORATED SCREEN	1
1	LST280SS	80 SS MESH SCREEN	1
1	MLS280SS	80 SS MESH PERFORATED SCREEN	1
1	LST2100SS	100 SS MESH SCREEN	1
1	MLS2100SS	100 SS MESH PERFORATED SCREEN	1
2	MLS222B	2" FLANGED Y STRAINER BODY	1
3	MLS220C1	2" FLANGED Y STRAINER CAP	1
4	MLS220R1	2" FLANGED Y STRAINER RING	1
5	LSQ200-R	2" PLUG GASKET	1
6	LSQ200-PL	2" PLUG	1
7	MLS220G1	2" BODY GASKET	1
2-7	MLS222BC	STRAINER WITHOUT SCREEN	1

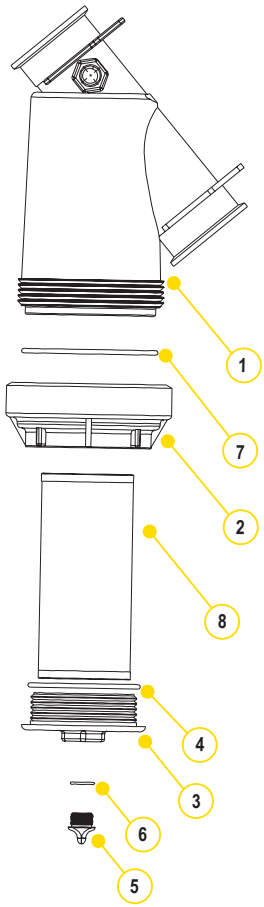

3" Y LINE STRAINERS

FEATURES

- EPDM gaskets
- 304 stainless steel screens
- Must use on suction side or non-pressure side in all applications

REPLACEMENT PARTS 3"

ITEM	PART NO	DESCRIPTION	QTY
1	MLS300B	3" FLANGED Y STRAINER BODY	1
2	MLS300CAP	3" FLANGED Y STRAINER CAP	1
3	LS300EC	3" END CAP	1
4	MLS300ECG	3" EPDM END CAP GASKET	1
4	MLS300ECGV	3" FKM END CAP GASKET	1
5	13777	¾" PLUG	1
6	13778	O-RING	1
7	MLS300G	3" EPDM CAP GASKET	1
8	LS304	4 SS MESH SCREEN	1
8	LS308	8 SS MESH SCREEN	1
8	LS312	12 SS MESH SCREEN	1
8	LS320	20 SS MESH SCREEN	1
8	LS350	50 SS MESH SCREEN	1
1-7	MLS300BC	STRAINER WITHOUT SCREEN	1

BOTTOM DRAIN BOLTED TANK FITTINGS

FEATURES

- Stainless steel bolts
- Bolt head plugs sealed ultrasonically
- Glass reinforced polypropylene
- EDPM gasket standard
- FKM gasket available

BOTTOM DRAIN BOLTED TANK FITTINGS

PART NO	DESCRIPTION	MAX PSI	LOT QTY
MBF100BD	1" FLANGE X 1" FEMALE THREAD W/EPDM GASKET	150	5
MBF200BD	2" FLANGE X 2" FEMALE THREAD W/EPDM GASKET	150	5
MBF220BD	2" FP FLANGE X 2" FEMALE THREAD W/EPDM GASKET	150	5
MBF300BD	3" FLANGE X 3" FEMALE THREAD W/EPDM GASKET	150	8

BOTTOM DRAIN BULKHEAD FITTINGS

FEATURES

- Glass reinforced polypropylene
- EDPM standard
- Groove allows more drainage
- Gasket not included

BOTTOM DRAIN BULKHEAD FITTINGS

PART NO	DESCRIPTION	HOLE SIZE	MAX PSI	LOT QTY
MTF220BD	2" FP FLANGE X 2" FEMALE THREAD W/EPDM GASKET	3¼"	300	10
MTF300BD	3" FLANGE X 3" FEMALE THREAD W/EPDM GASKET	4½"	200	1

BOLTED TANK FITTINGS

FEATURES

- Stainless steel bolts
- Bolt head plugs sealed ultrasonically
- Glass reinforced polypropylene
- EDPM gasket standard
- FKM gasket available

BOLTED TANK FITTINGS

PART NO	DESCRIPTION	MAX PSI	LOT QTY
MBF100	1" FLANGE X 1" FEMALE THREAD W/EPDM GASKET	150	5
MBF200	2" FLANGE X 2" FEMALE THREAD W/EPDM GASKET	150	5
MBF220	2" FP FLANGE X 2" FEMALE THREAD W/EPDM GASKET	150	5
MBF300	3" FLANGE X 3" FEMALE THREAD W/EPDM GASKET	150	5

NOT YOUR TYPICAL SPILLAGE

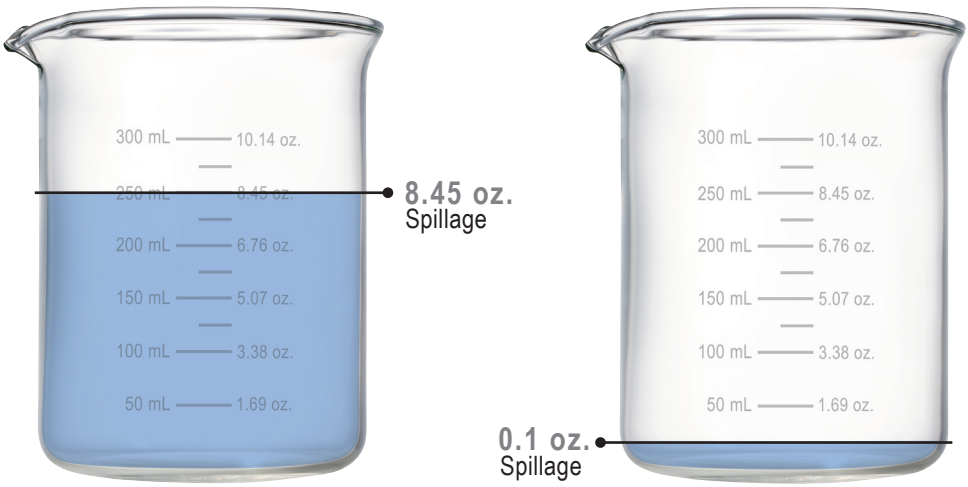

STANDARD 2" VALVE

2" DRY-MATE

99% SPILLAGE REDUCTION

- Reduction of typical spillage using standard 2" valve with cam lock connection vs. Dry-Mate
- 8.45 oz. (250 mL) vs. 0.1 oz. (3 mL) spillage
- At five disconnections per day, this is **over 118 gallons (450 liters) saved per year**; enough to fill the gas tanks of eight mid-size automobiles

FEATURES

SAFETY FIRST

Product is important, but the safety of your team is essential. With Dry-Mate Dry-Disconnects, leakage from disconnecting is miniscule compared to standard valves. When properly installed and operated, the danger posed by harmful chemicals contacting your team is greatly reduced.

EVERY DROP COUNTS

Your product is money. Why waste money in spilling your product every time you disconnect? With Dry-Mate, your spillage amount will be significantly reduced. At 3 mL product spillage for a 2" line, you can have peace of mind that your product is being placed where it should be and not on the ground.

PRODUCT ONLY WHERE YOU WANT IT

When a Dry-Mate is properly installed and operated, the assembly will not accidentally separate while fluid is flowing; preventing costly mishaps.

DITCH THE MAINTENANCE

All that spillage has to go somewhere. If you are collecting large areas of spillage run-off, you have to have it pumped out. Reduce your maintenance costs on your spillage pits by keeping fluids contained.

1½" POLY DRY-MATES

FEATURES

- Lightweight
- Easy to use
- Economical
- Reduces risk of exposure
- Wide range of chemical resistance
- Unrestricted 1½" flow
- Patented double ball design with cam lever connection
- When properly installed and operated, the assembly will not accidentally separate while fluid is flowing; preventing costly mishaps
- Spillage data: 1½" = 2ml

REPAIR KIT INCLUDES:

- Ball
- Body gasket
- Thrust washer
- Ball seats
- Upper stem bushing
- Stem o-ring

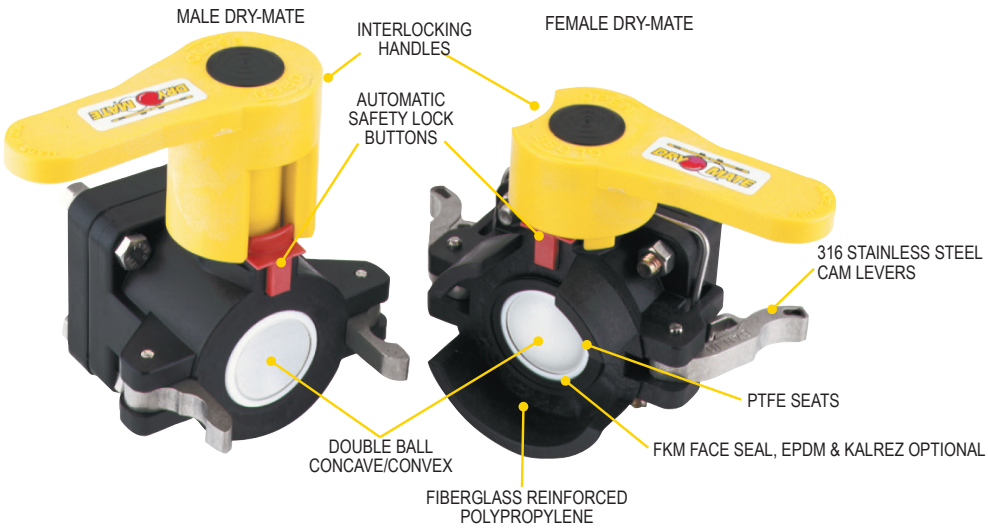

1½" POLY MALE DRY-MATE					
PART NO	DESCRIPTION	MAX PSI	PIPE SIZE	OPENING THRU BALL	QTY
DM150A	1½" MALE X FPT NPT W/FKM SEALS	100	1½"	1½"	1
DM150AB	1½" MALE X FPT BSP W/FKM SEALS	100	1½"	1½"	1
DM150AE	1½" MALE X FPT NPT W/EPDM SEALS	100	1½"	1½"	1

1½" POLY FEMALE DRY-MATE					
PART NO	DESCRIPTION	MAX PSI	PIPE SIZE	OPENING THRU BALL	QTY
DM150D	1½" FEMALE X FPT NPT W/FKM SEALS	100	1½"	1½"	1
DM150DB	1½" FEMALE X FPT BSP W/FKM SEALS	100	1½"	1½"	1
DM150DE	1½" FEMALE X FPT NPT W/EPDM SEALS	100	1½"	1½"	1

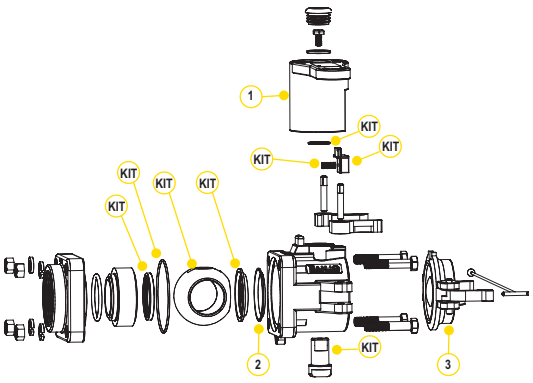

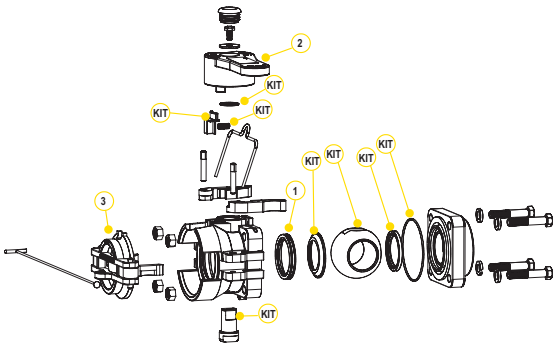

REPLACEMENT PARTS MALE			
ITEM	PART NO	DESCRIPTION	QTY
1	DM20153M	MALE HANDLE	1
1	DB20153M	LOW PROFILE HANDLE	1
2	DB20290	FKM FACE SEAL	1
2	DB20295	EPDM FACE SEAL	1
2	DM20296	KALREZ® FACE SEAL	1
3	DM200CAP	DUST CAP	1
KIT	DM20200A	REPAIR KIT FOR DM150A	1

REPLACEMENT PARTS FEMALE			
ITEM	PART NO	DESCRIPTION	QTY
1	DM20294A	FKM FACE SEAL	1
1	DM20295A	EPDM FACE SEAL	1!
1	DM20296	KALREZ® FACE SEAL	1
2	DM20153F	FEMALE HANDLE	1
3	DM200PL	DUST PLUG	1
KIT	DM20200D	REPAIR KIT FOR DM150D	1

2" POLY DRY-MATES

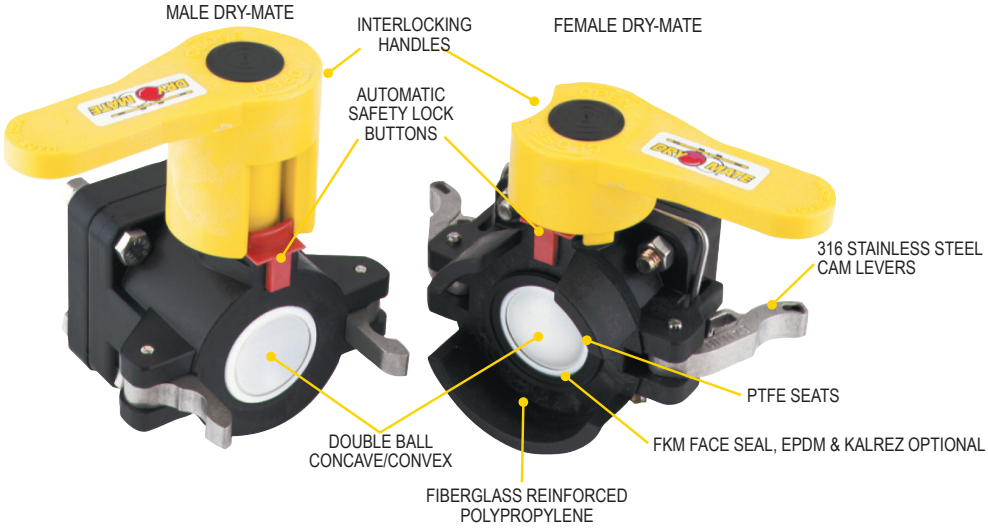

FEATURES

- Lightweight
- Easy to use
- Economical
- Reduces risk of exposure
- Wide range of chemical resistance
- Unrestricted 1½" flow
- Patented double ball design with cam lever connection
- When properly installed and operated, the assembly will not accidentally separate while fluid is flowing; preventing costly mishaps
- Spillage data: 2" = 2.6ml

2" POLY MALE DRY-MATE

PART NO	DESCRIPTION	MAX PSI	PIPE SIZE	OPENING THRU BALL	QTY
DM200A	2" MALE X FPT NPT W/FKM SEALS	100	2"	1½"	1
DM200AB	2" MALE X FPT BSP W/FKM SEALS	100	2"	1½"	1
DM200AE	2" MALE X FPT NPT W/EPDM SEALS	100	2"	1½"	1
DMMT201A	2" MALE X MALE NPT W/LOW PROFILE HANDLE	100	2"	1½"	1

2" POLY FEMALE DRY-MATE

PART NO	DESCRIPTION	MAX PSI	PIPE SIZE	OPENING THRU BALL	QTY
DM200D	2" FEMALE X FPT NPT W/FKM SEALS	100	2"	1½"	1
DM200DB	2" FEMALE X FPT BSP W/FKM SEALS	100	2"	1½"	1
DM200DE	2" FEMALE W/EPDM SEALS	100	2"	1½"	1

REPAIR KIT INCLUDES:

- Ball
- Body gasket
- Thrust washer
- Ball seats
- Upper stem bushing
- Stem o-ring

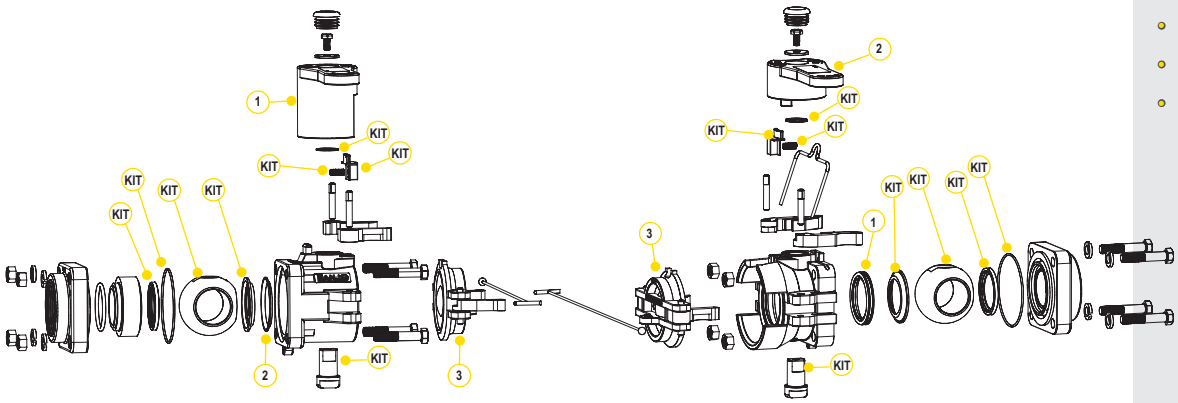

REPLACEMENT PARTS MALE

ITEM	PART NO	DESCRIPTION	QTY
1	DM20153M	MALE HANDLE	1
1	DB20153M	LOW PROFILE HANDLE	1
2	DB20290	FKM FACE SEAL	1
2	DB20295	EPDM FACE SEAL	1
2	DM20296	KALREZ® FACE SEAL	1
3	DM200CAP	DUST CAP	1
KIT	DM20200A	REPAIR KIT FOR DM200A & DM200AE	1

REPLACEMENT PARTS FEMALE

ITEM	PART NO	DESCRIPTION	QTY
1	DM20294A	FKM FACE SEAL	1
1	DM20295A	EPDM FACE SEAL	1
1	DM20296	KALREZ® FACE SEAL	1
2	DM20153F	FEMALE HANDLE	1
3	DM200PL	DUST PLUG	1
KIT	DM20200D	REPAIR KIT FOR DM200D & DM200DE	1

2" FULL PORT POLY DRY-MATES

FEATURES

- Lightweight
- Easy to use
- Economical
- Reduces risk of exposure
- Wide range of chemical resistance
- Unrestricted 2" flow
- Patented double ball design with cam lever connection
- When properly installed and operated, the assembly will not accidentally separate while fluid is flowing; preventing costly mishaps
- Spillage data: 2" FP = 3.6ml

REPAIR KIT INCLUDES:

- Body gasket
- Thrust washer
- Ball seats
- Upper stem bushing
- Stem o-ring
- Face seal

DM220D DM220A

2" FULL PORT POLY DRY-MATES					
PART NO	DESCRIPTION	MAX PSI	PIPE SIZE	OPENING THRU BALL	QTY
DM220D	2" FEMALE X FPT NPT W/FKM SEALS	225	2"	2"	1
DM220A	2" MALE X FPT W/FKM SEALS	225	2"	2"	1

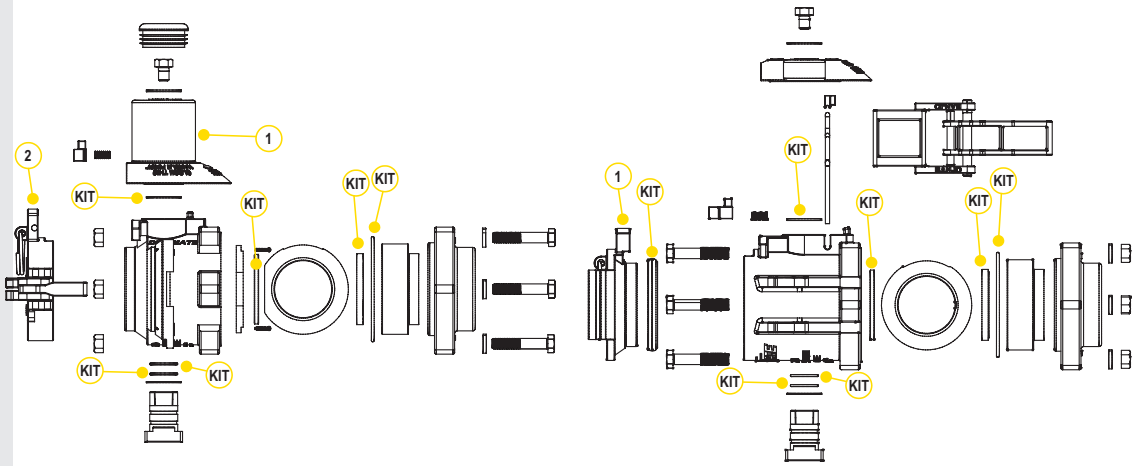

REPLACEMENT PARTS MALE			
ITEM	PART NO	DESCRIPTION	QTY
1	DM25153M	MALE HANDLE	1
2	DM220CAP	DUST CAP	1
KIT	DM25200	REPAIR KIT	1

REPLACEMENT PARTS FEMALE			
ITEM	PART NO	DESCRIPTION	QTY
1	DM221PL	DUST PLUG	1
1	DM25200	REPAIR KIT	1

3" FULL PORT POLY DRY-MATES

DM300DFP

DM300AFP

3" FULL PORT POLY DRY-MATES					
PART NO	DESCRIPTION	MAX PSI	PIPE SIZE	OPENING THRU BALL	QTY
DM300AFP	3" FP MALE X 3" FEMALE NPT THREADS W/ FKM SEALS	150	3"	3"	1
DM300DFP	3" FP FEMALE X 3" FEMALE NPT THREADS W/ FKM SEALS	150	3"	3"	1

FEATURES

- Lightweight
- Easy to use
- Economical
- Reduces risk of exposure
- Wide range of chemical resistance
- Unrestricted 3" flow
- Patented double ball design with cam lever connection
- When properly installed and operated, the assembly will not accidentally separate while fluid is flowing; preventing costly mishaps
- Spillage data: 3" = 20ml

REPAIR KIT INCLUDES:

- Ball
- Body gasket
- Thrust washer
- Ball seats
- Upper stem bushing
- Stem o-ring
- Face seal

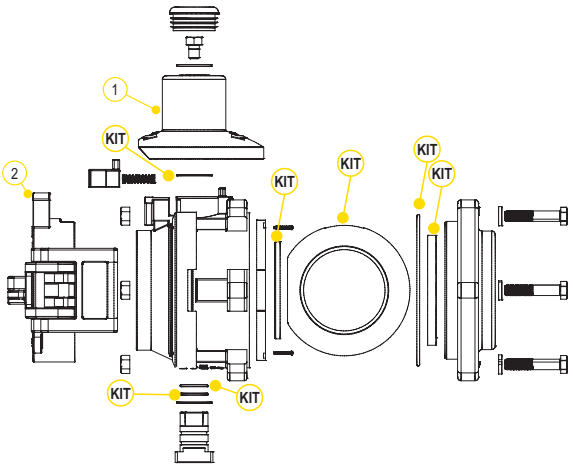

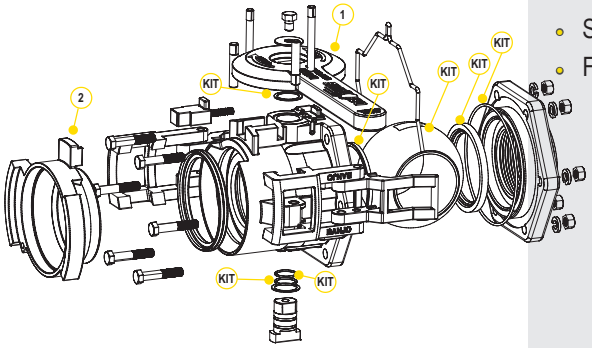

REPLACEMENT PARTS MALE			
ITEM	PART NO	DESCRIPTION	QTY
1	DM35153M	MALE HANDLE	1
2	DM300CAP	DUST CAP	1
KIT	DM35200	REPAIR KIT	1

REPLACEMENT PARTS FEMALE			
ITEM	PART NO	DESCRIPTION	QTY
1	DM35153F	FEMALE HANDLE	1
2	DM300PL	DUST PLUG	1
KIT	DM35200	REPAIR KIT	1

1" FULL PORT STAINLESS STEEL DRY-MATES

FEATURES

- 316 stainless steel construction
- Unrestricted 1" flow
- Patented double ball design with cam lever connection
- 300°F maximum operating temperature
- 100% PTFE ball seats
- When properly installed and operated, the assembly will not accidentally separate while fluid is flowing; preventing costly mishaps
- Spillage data: 1" FP = 1.7ml

DM100ASS

DM100DSS

1" FULL PORT STAINLESS STEEL DRY-MATE					
PART NO	DESCRIPTION	MAX PSI	PIPE SIZE	OPENING THRU BALL	QTY
DM100ASS	1" MALE X FPT NPT W/ PTFE SEALS	150	1"	1"	1
DM100ABSS	1" MALE X FPT BSP W/ PTFE SEALS	150	1"	1"	1
DM100DSS	1" FEMALE X FPT NPT W/ FKM SEALS	150	1"	1"	1
DM100DSSE	1" FEMALE X FPT NPT W/ EPDM SEALS	150	1"	1"	1
DM100DBSS	1" FEMALE X FPT BSP W/ FKM SEALS	150	1"	1"	1

REPAIR KIT INCLUDES:

- Ball
- Body gasket
- Thrust washer
- Ball seats
- Upper stem bushing
- Stem o-ring
- Face seal

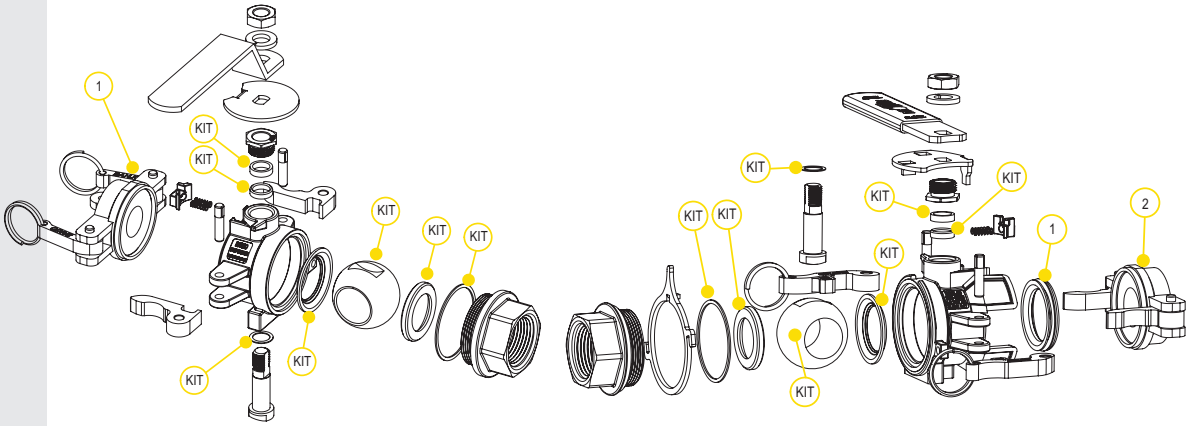

REPLACEMENT PARTS MALE			
ITEM	PART NO	DESCRIPTION	QTY
1	DM100CAP	DUST CAP	1
KIT	DM101SS	REPAIR KIT	1

REPLACEMENT PARTS FEMALE			
ITEM	PART NO	DESCRIPTION	QTY
1	DM10294A	FKM FACE SEAL	1
1	DM10295A	EPDM FACE SEAL	1
1	DM10296	KALREZ® FACE SEAL	1
2	DM100PL	POLY PLUG	1
KIT	DM102SSV	FKM REPAIR KIT	1

1½" FULL PORT STAINLESS STEEL DRY-MATES

DM150ASS

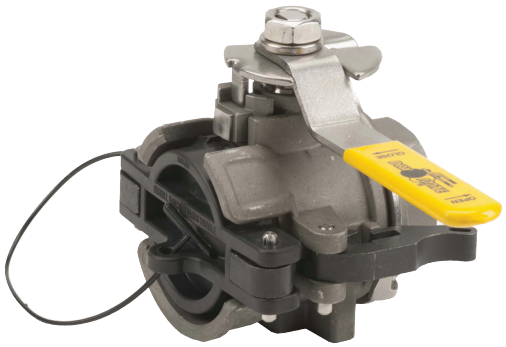

DM150DSS

FEATURES

- 316 stainless steel construction
- Unrestricted 1½" flow
- Patented double ball design with cam lever connection
- 300°F maximum operating temperature
- 100% PTFE ball seats
- When properly installed and operated, the assembly will not accidentally separate while fluid is flowing; preventing costly mishaps
- Spillage data: 1½" FP = 3ml

1½" FULL PORT STAINLESS STEEL DRY-MATE

PART NO	DESCRIPTION	MAX PSI	PIPE SIZE	OPENING THRU BALL	QTY
DM150ASS	1½" MALE X FPT NPT W/ PTFE SEALS	150	1½"	1½"	1
DM150ABSS	1½" MALE X FPT BSP W/ PTFE SEALS	150	1½"	1½"	1
DM150DSS	1½" FEMALE X FPT NPT W/ FKM SEALS	150	1½"	1½"	1
DM150DSSE	1½" FEMALE X FPT NPT W/ EPDM SEALS	150	1½"	1½"	1
DM150DBSS	1½" FEMALE X FPT BSP W/ FKM SEALS	150	1½"	1½"	1

REPAIR KIT INCLUDES:

- Ball
- Body gasket
- Thrust washer
- Ball seats
- Upper stem bushing
- Stem o-ring
- Face seal

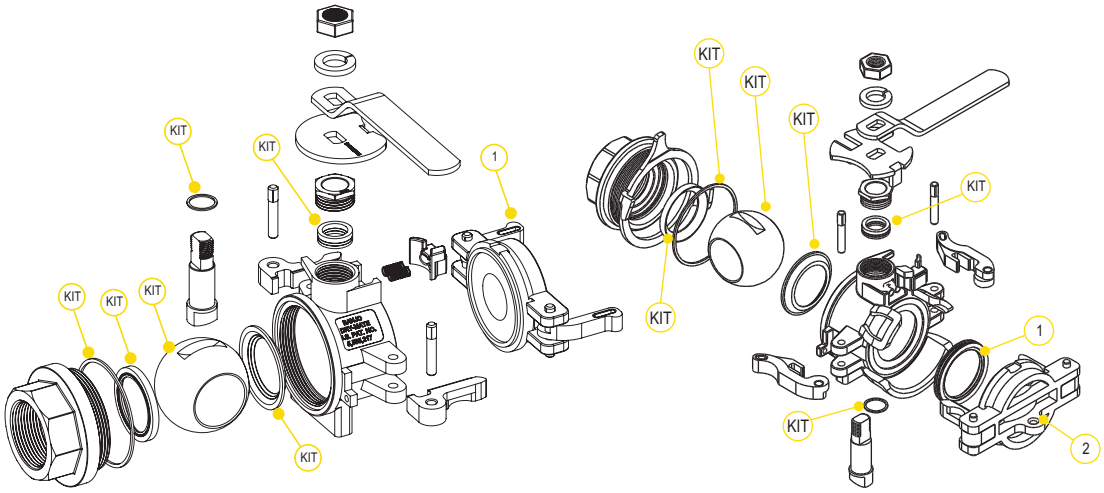

REPLACEMENT PARTS MALE

ITEM	PART NO	DESCRIPTION	QTY
1	DM200ACAP	DUST CAP	1
KIT	DM201SS	REPAIR KIT	1

REPLACEMENT PARTS FEMALE

ITEM	PART NO	DESCRIPTION	QTY
1	DM20294A	FKM FACE SEAL	1
1	DB20295	EPDM FACE SEAL	1
1	DM20296	KALREZ® FACE SEAL	1
2	DM200APL	DUST PLUG	1
KIT	DM202SSV	FKM REPAIR KIT	1

2" STAINLESS STEEL DRY-MATES

FEATURES

- 316 stainless steel construction
- Patented double ball design with cam lever connection
- 300°F maximum operating temperature
- 100% PTFE ball seats
- When properly installed and operated, the assembly will not accidentally separate while fluid is flowing; preventing costly mishaps
- Spillage data: 2" = 3.6ml

DM200ASS

DM200DSS

2" STANDARD PORT STAINLESS STEEL DRY-MATE

PART NO	DESCRIPTION	MAX PSI	PIPE SIZE	OPENING THRU BALL	QTY
DM200ASS	2" MALE X FPT NPT W/ PTFE SEALS	150	2"	1½"	1
DM200ABSS	2" MALE X FPT BSP W/ PTFE SEALS	150	2"	1½"	1
DM200DSS	2" FEMALE X FPT NPT W/ FKM SEALS	150	2"	1½"	1
DM200DSST	2" FEMALE X FPT NPT W/ KALREZ® SEALS	150	2"	1½"	1
DM200DBSS	2" FEMALE X FPT BSP W/ FKM SEALS	150	2"	1½"	1

REPAIR KIT INCLUDES:

- Ball
- Body gasket
- Thrust washer
- Ball seats
- Upper stem bushing
- Stem o-ring
- Face seal

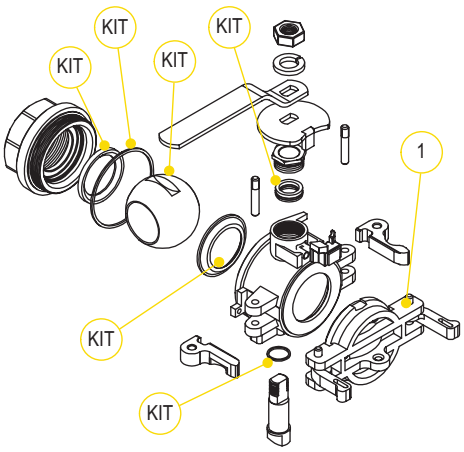

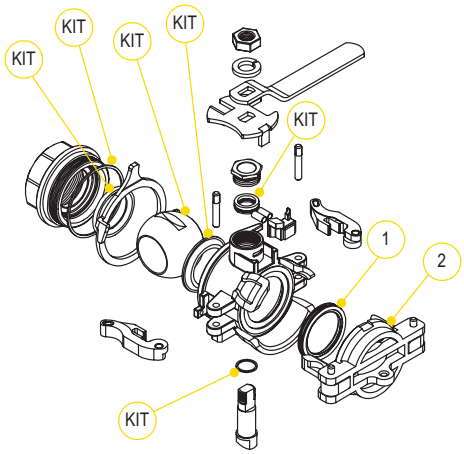

REPLACEMENT PARTS MALE

ITEM	PART NO	DESCRIPTION	QTY
1	DM200ACAP	DUST CAP	1
KIT	DM201SS	REPAIR KIT	1

REPLACEMENT PARTS FEMALE

ITEM	PART NO	DESCRIPTION	QTY
1	DM20294A	FKM FACE SEAL	1
1	DB20295	EPDM FACE SEAL	1
1	DM20296	KALREZ® FACE SEAL	1
2	DM200APL	POLY PLUG	1
KIT	DM202SSV	FKM REPAIR KIT	1

2" FULL PORT STAINLESS STEEL DRY-MATES

DM220ABSS

DM220DBSS

FEATURES

- 316 stainless steel construction
- Unrestricted 2" flow
- Patented double ball design with cam lever connection
- 300°F maximum operating temperature
- 100% PTFE ball seats
- When properly installed and operated, the assembly will not accidentally separate while fluid is flowing; preventing costly mishaps
- Spillage data: 2" FP = 3.8ml

2" FULL PORT STAINLESS STEEL DRY-MATE

PART NO	DESCRIPTION	MAX PSI	PIPE SIZE	OPENING THRU BALL	QTY
DM220ASS	2" FULL PORT MALE X FPT NPT W/ PTFE SEALS	300	2"	2"	1
DM220ABSS	2" FULL PORT MALE X FPT BSP W/ PTFE SEALS	300	2"	2"	1
DM220DSS	2" FULL PORT FEMALE X FPT NPT W/ FKM SEALS	300	2"	2"	1
DM220DBSS	2" FULL PORT FEMALE X FPT BSP W/ FKM SEALS	300	2"	2"	1

REPAIR KIT INCLUDES:

- Body gasket
- Thrust washer
- Ball seats
- Upper stem bushing
- Stem o-ring

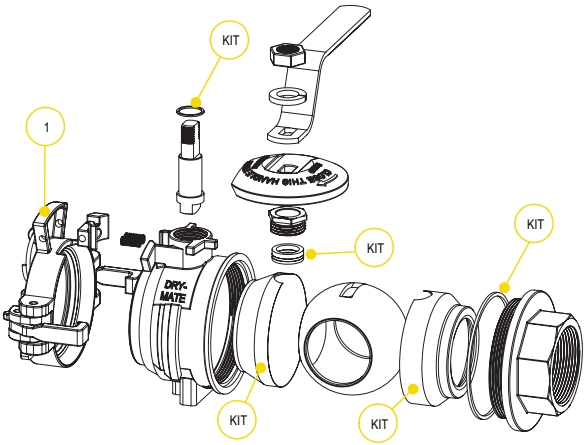

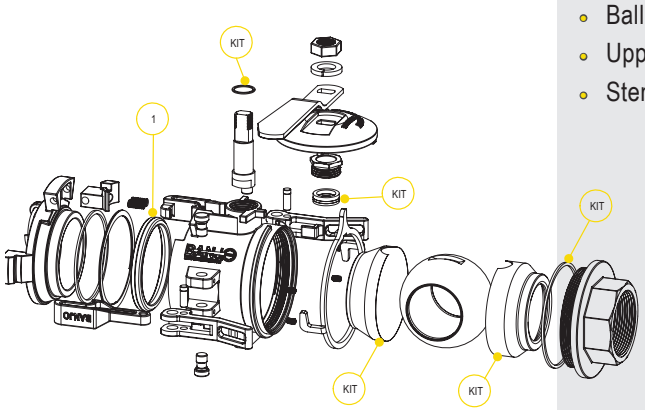

REPLACEMENT PARTS MALE

ITEM	PART NO	DESCRIPTION	QTY
1	DM220CAP	DUST CAP	1
KIT	DM221SS	REPAIR KIT	1

REPLACEMENT PARTS FEMALE

ITEM	PART NO	DESCRIPTION	QTY
1	DM25294	FKM FACE SEAL	1
1	DM25294T	KALREZ® FACE SEAL	1
KIT	DM222SS	REPAIR KIT	1

DRY POPPET COUPLINGS

FEATURES

- Lightweight
- Minimal fluid spillage
- Easy to use
- Economical
- Reduces risk of exposure
- Wide range of chemical resistance
- Maximum operating temperature 150° F
- 30 GPM maximum flow
- Precision molded in polypropylene
- 1" female NPT threads

APPLICATIONS

- Agriculture
- Industrial
- Pharmaceutical
- Chemical processing

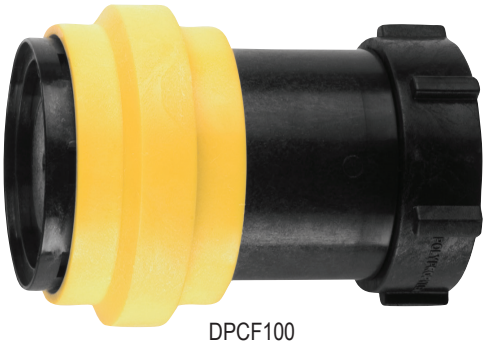

DPCF100

DPCM100

DPCMT100

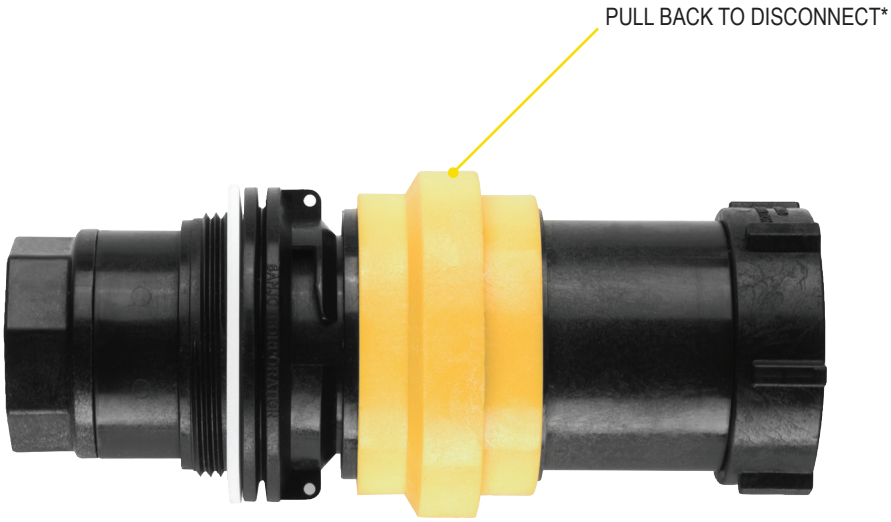

DRY POPPET COUPLINGS			
PART NO	DESCRIPTION	MAX PSI	QTY
DPCF100	FEMALE DRY POPPET COUPLER, 1" FEMALE NPT THREADS W/ FKM SEALS	100	1
DPCM100	MALE DRY POPPET ADAPTER, 1" FEMALE NPT THREADS W/ FKM SEALS	150	1
DPCMT100	MALE DRY POPPET ADAPTER, W/2" MALE THREADED BODY 1" FEMALE NPT THREADS W/ FKM SEALS	150	1

***Note:** Male adapter and female coupler shown coupled together but sold separately.

SPIN WELD BALL VALVES

W230237

W230238

W230239

W230240

WSF210FSA

WSF210FSAV

Identifying collar number found here

WSMT210FSA

WSMT210FSAV

FEATURES

- PTFE seats
- FKM stem o-rings
- Precision molded polypropylene is reinforced with fiberglass for additional strength
- Zinc alloy collar
- FKM, EPDM and Santoprene collar gaskets available
- Handles close in either direction
- For faster shipping, order in box quantities

SPINWELD BALL VALVE

PART NO	DESCRIPTION	GASKET MATERIAL	COLLAR FITS	COLLAR NUMBER	COLLAR ID	MAX PSI	QTY
W230237	2" POLY SPINWELD VALVE W/NPT OUTLET & CAP & FOIL SEAL	FKM	MAUSER®	V22283 C & D	2¼"	20	1
W230238	2" POLY SPINWELD VALVE W/QDC OUTLET & CAP & FOIL SEAL	FKM	MAUSER®	V22283 C & D	2¼"	20	1
W230239	2" POLY SPINWELD VALVE W/NPT OUTLET & CAP & FOIL SEAL	EPDM	MAUSER®	V22283 C & D	2¼"	20	1
W230240	2" POLY SPINWELD VALVE W/QDC OUTLET & CAP & FOIL SEAL	EPDM	MAUSER®	V22283 C & D	2¼"	20	1
WSF210FSA	2" POLY SPINWELD VALVE W/QDC OUTLET, FOIL SEAL & CAP	SANTOPRENE	SCHUTZ®	V20280 A & B	2¾"	50	1
WSF210FSAV	2" POLY SPINWELD VALVE W/QDC OUTLET, FOIL SEAL & CAP	FKM	SCHUTZ®	V20280 A & B	2¾"	50	1
WSMT210FSA	2" POLY SPINWELD VALVE W/NPT OUTLET, FOIL SEAL & CAP	SANTOPRENE	SCHUTZ®	V20280 A & B	2¾"	225	1
WSMT210FSAV	2" POLY SPINWELD VALVE W/NPT OUTLET, FOIL SEAL & CAP	FKM	SCHUTZ®	V20280 A & B	2¾"	225	1

FDA UNION VALVE AND ADAPTERS

FEATURES

- Precision molded in glass reinforced polypropylene for strength and chemical resistance
- PTFE seats or smooth operation and proper sealing characteristics
- Double EPDM o-rings in stem area for extra sealing protection
- Interlocking body and end plate to allow easy thread connection when installing valves

MBP200

NIP2101

UV204FPFD

UNION VALVE AND ADAPTERS			
PART NO	DESCRIPTION	MAX PSI	QTY
MBP200	2" BUTTRESS X 2" NPT ASSEMBLY	200	1
NIP2101	2" NPT X BSP NIPPLE	300	1
UV204FPFD	2" FDA UNION VALVE WITH EPDM	225	1

TANK LIDS

IBC SOLID TANK LIDS

PART NO	DESCRIPTION	GASKET	LOT QTY
TL650S	6" SOLID TANK LID W/GASKET	SANTOPRENE	10

IBC TANK LID WITH UNVENTED PLUG

PART NO	DESCRIPTION	GASKET	LOT QTY
TL651S	6" TANK LID W/ UNVENTED 2" PLUG W/GASKET	SANTOPRENE	10

IBC TANK LIDS WITH VENTED PLUG

PART NO	DESCRIPTION	GASKET	QTY
TL652S	6" TANK LID W/ VENTED 2" PLUG W/GASKET	SANTOPRENE	1
TL652E	6" TANK LID VENTED 2" PLUG W/GASKET	EPDM	1

TANK LID FOR SPRAY TANKS

PART NO	DESCRIPTION	GASKET	QTY
TL600C	6" VENTED TANK LID	N/A	1

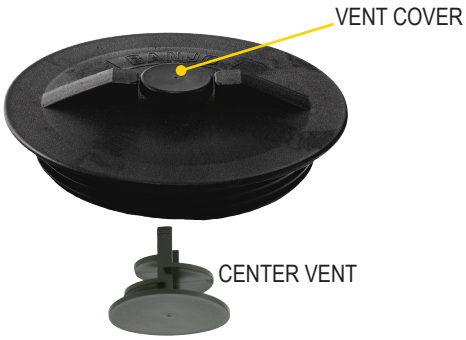

VENTED TANK LIDS

PART NO	DESCRIPTION	GASKET	QTY
TLVA10	10" VENTED TANK LID & RING ASSEMBLY (NEW STYLE)	N/A	1

FEATURES

- Maximum air flow through vent channels
- Airflow equivalent to a 3" hole
- No secondary venting needed
- Baffled vents
- Center vent goes in underside of lid
- NPT Threads

SIPHON TUBES

SIPHON TUBES

PART NO	DESCRIPTION	LOT QTY
ST200	2" POLY SIPHON TUBE	5
ST300	3" POLY SIPHON TUBE	5

FEATURES

- Full flow size
- Long length
- Male NPT threads
- Made of polypropylene

POLYPROPYLENE ACCESSORIES

FEATURES

- Glass reinforced polypropylene

BUTTRESS BY MALE ADAPTER

PART NO	DESCRIPTION	GASKET	PSI	LOT QTY
TA283	2" BUTTRESS X 2" MALE NPT THREADS W/GASKET	SANTOPRENE	300	10
TA283QD	2" BUTTRESS X 2" MALE ADAPTER QDC W GASKET	SANTOPRENE	150	10

CAPS

PART NO	DESCRIPTION	PSI	QTY
201FPT	2" FEMALE NPT CAP - BLACK	20	1
211FPT	2" FEMALE NPT CAP - YELLOW	N/A	1

BUNG PLUGS

PART NO	DESCRIPTION	QTY
231MPT	2" MPT SOLID BUNG W/ EPDM GASKET	1
TL6531	2" VENTED PLUG W/ EPDM GASKET	1

DUST CAPS & LANYARD

PART NO	DESCRIPTION	PSI	LOT QTY
200CAP	2" CAM LEVER DUST CAP	200	20
200CAPSH	2" CAM LEVER DUST CAP WITH SHORT ARMS	200	10
201CAPSH	2" CAM LEVER DUST CAP W/SHORT ARMS & RINGS	N/A	10
202CAP	2" CAM LEVER DUST CAP	20	10
V20207	11" POLYURETHANE LANYARD	N/A	1

BOLTED TANK FLANGES

FEATURES

- Stainless steel bolts
- Bolt head plugs ultrasonically sealed
- Glass reinforced polypropylene
- EPDM gaskets standard and FKM available
- WARNING: Do not tighten tank flange bolts more than 12 ft pounds

BF150

BF300

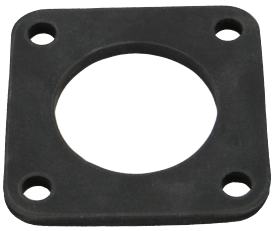

BOLTED TANK FLANGES			
PART NO	DESCRIPTION	PSI	LOT QTY
BF075	¾" X 1" THREADED FLANGE W/EPDM GASKET	150	10
BF100	1" X 1" THREADED FLANGE W/EPDM GASKET	150	10
BF150	1½" X 2" THREADED FLANGE W/EPDM GASKET	150	5
BF200	2" X 2" THREADED FLANGE W/EPDM GASKET	150	10
BF200V	2" X 2" THREADED FLANGE W/FKM GASKET	150	10
BF220	2" X 2" FP THREADED FLANGE W/EPDM GASKET	150	5
BF300	3" X 3" THREADED FLANGE W/EPDM GASKET	150	4

BOLTED TANK FLANGE GASKETS			
PART NO	DESCRIPTION	PSI	QTY
BF100GE	1" EPDM GASKET	N/A	1
BF200GE	1½" & 2" EPDM GASKET	N/A	1
BF200GV	1½" & 2" FKM GASKET	N/A	1
BF220GE	2" FULL PORT EPDM GASKET	N/A	1
BF220GV	2" FULL PORT FKM GASKET	N/A	1
BF300GE	3" EPDM GASKET	N/A	1
BF300GV	3" FKM GASKET	N/A	1

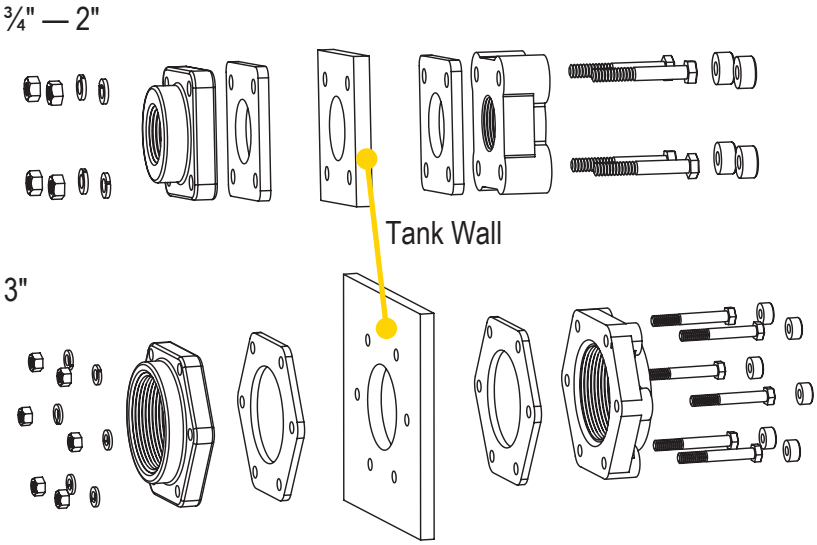

BOLTED BOTTOM DRAIN TANK FLANGES

FEATURES

- Stainless steel bolts
- Bolt head plugs ultrasonically sealed
- Glass reinforced polypropylene
- EPDM gaskets standard and FKM available
- Allows 100% rinse free
- No sediment build up
- Excellent for avoiding herbicide cross contamination
- Fits most cone bottom and chemical inductor tanks, 30 gallons and larger.
- For faster shipping, order in box quantities

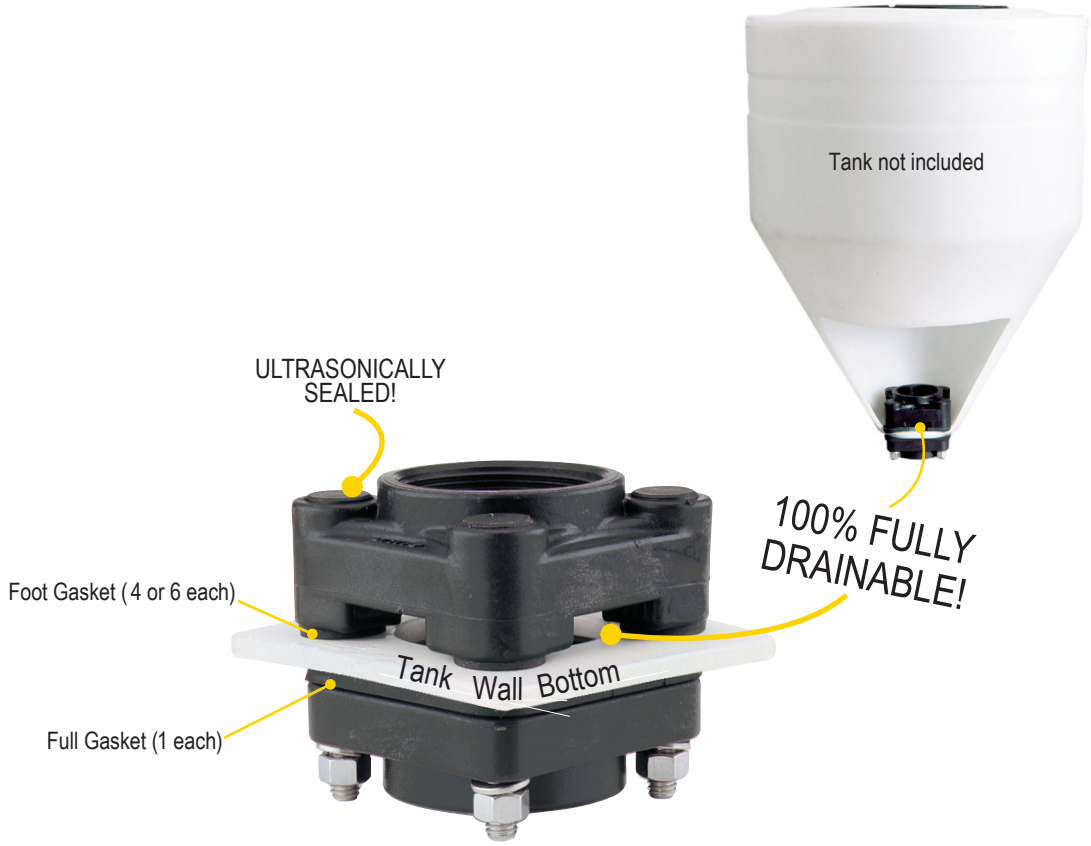

BOLTED TANK FLANGES			
PART NO	DESCRIPTION	MAX PSI	LOT QTY
BF075BD	¾" X 1" THREADED POLY FLANGE W/ EPDM GASKET	150	5
BF100BD	1" X 1" THREADED POLY FLANGE W/EPDM GASKET	150	5
BF150BD	1½" X 2" THREADED POLY FLANGE W/EPDM GASKET	150	5
BF200BD	2" X 2" THREADED POLY FLANGE W/EPDM GASKET	150	5
BF220BD	2" X 2" FULL PORT THREADED POLY FLANGE W/EPDM GASKET	150	5
BF300BD	3" X 3" THREADED POLY FLANGE W/EPDM GASKET	150	4

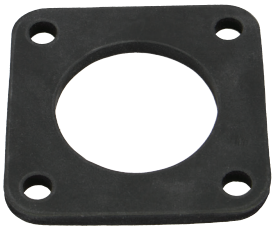

BOLTED TANK FLANGE GASKETS			
PART NO	DESCRIPTION	MAX PSI	QTY
BF100GE	¾", 1" & 1¼" EPDM GASKET	N/A	1
BF100GRE	¾", 1" & 1¼" FOOT EPDM GASKET	N/A	1
BF100GRV	¾", 1" & 1¼" FOOT FKM GASKET	N/A	1
BF200GE	1½" & 2" EPDM GASKET	N/A	1
BF200GV	1½" & 2" FKM GASKET	N/A	1
BF200GFV	1½" & 2" STD. PORT, 2" FULL PORT FOOT FKM GASKET	N/A	1
BF220GE	2" FULL PORT EPDM GASKET	N/A	1
BF220GV	2" FULL PORT FKM GASKET	N/A	1
BF300GE	3" EPDM GASKET	N/A	1
BF300GV	3" FKM GASKET	N/A	1
BF300GFE	3" FOOT EPDM GASKET	N/A	1
BF300GFV	3" FOOT FKM GASKET	N/A	1

BULKHEAD TANK FITTINGS

POLY BULKHEAD FITTINGS

PART NO	DESCRIPTION	HOLE SIZE	MAX PSI	LOT QTY
TF050	½" POLY BULKHEAD TANK FITTING W/EPDM GASKET	1⅝"	300	10/BAG
TF075	¾" POLY BULKHEAD TANK FITTING W/EPDM GASKET	1⅝"	300	10/BAG
TF075V	¾" POLY BULKHEAD TANK FITTING W/FKM GASKET	1⅝"	300	10
TF100	1" POLY BULKHEAD TANK FITTING W/EPDM GASKET	2¼"	300	10/BAG
TF125	1¼" POLY BULKHEAD TANK FITTING W/EPDM GASKET	2¼"	300	10
TF150	1½" POLY BULKHEAD TANK FITTING W/EPDM GASKET	3"	300	10
TF200	2" POLY BULKHEAD TANK FITTING W/EPDM GASKET	3"	300	10
TF200V	2" POLY BULKHEAD TANK FITTING W/FKM GASKET	3"	300	10
TF220	2" POLY BULKHEAD TANK FITTING W/EPDM GASKET	3¼"	300	10
TF300	3" POLY BULKHEAD TANK FITTING W/EPDM GASKET	4½"	300	5
TF400	4" POLY BULKHEAD TANK FITTING W/EPDM GASKET	5¾"	225	5

FEATURES

- Double sided female NPT threads
- Available with EPDM or FKM gasket
- Where noted, parts must be ordered in bag quantities

316 STAINLESS STEEL BULKHEAD FITTINGS

PART NO	DESCRIPTION	HOLE SIZE	MAX PSI	QTY
TF038SS	⅜" SS BULKHEAD TANK FITTING W/EPDM GASKET	1"	300	1
TF050SS	½" SS BULKHEAD TANK FITTING W/EPDM GASKET	1⅜"	300	1
TF075SS	¾" SS BULKHEAD TANK FITTING W/EPDM GASKET	1⅝"	300	1
TF100SS	1" SS BULKHEAD TANK FITTING W/EPDM GASKET	2¼"	300	1
TF125SS	1¼" SS BULKHEAD TANK FITTING W/EPDM GASKET	2¼"	300	1
TF150SS	1½" SS BULKHEAD TANK FITTING W/EPDM GASKET	3"	300	1
TF200SS	2" SS BULKHEAD TANK FITTING W/EPDM GASKET	3"	300	1
TF220SS	2" SS BULKHEAD TANK FITTING W/EPDM GASKET	3¼"	300	1
TF300SS	3" SS BULKHEAD TANK FITTING W/EPDM GASKET	4⅜"	300	1

BULKHEAD GASKETS

PART NO	DESCRIPTION	HOLE SIZE	FITS POLY	FITS SS	LOT QTY
100G	⅜" Bulkhead EPDM Gasket	1"		TF038SS	25
100GV	⅜" Bulkhead FKM Gasket	1"		TF038SS	25
TF138GV	½" Bulkhead FKM Gasket	1⅜"		TF050SS	1
150G	½" & ¾" Bulkhead EPDM Gasket	1⅝"	TF050 & TF075	TF075SS	25
150GV	½" & ¾" Bulkhead FKM Gasket	1⅝"	TF050 & TF075	TF075SS	25
200G	2" Bulkhead EPDM Gasket	2¼"	TF100 & TF125	TF100SS & TF125SS	25
200GV	2" Bulkhead FKM Gasket	2¼"	TF100 & TF125	TF100SS & TF125SS	25
300G	1½" & 2" Bulkhead EPDM Gasket	3"	TF200 & TF150	TF200SS & TF150SS	25
300GV	1½" & 2" Bulkhead FKM Gasket	3"	TF200 & TF150	TF200SS & TF150SS	25
TF220G	2" Bulkhead EPDM Gasket	3¼"	TF220	TF220SS	1
TF300G	3" Bulkhead EPDM Gasket	4½"	TF300	TF300SS	1
TF400G	4" Poly Bulkhead EPDM Gasket	5¾"	TF400		1
TF400GV	4" Poly Bulkhead FKM Gasket	5¾"	TF400		1

ANTI VORTEX VENT CAPS

FEATURES

- Male NPT
- Glass reinforced polypropylene
- 304 stainless steel screen

ANTI VORTEX VENT CAPS					
PART NO	DESCRIPTION	BORE SIZE	BORE AREA	VENT AREA	LOT QTY
VC200	2" ANTI VORTEX VENT CAP WITHOUT SCREEN	2"	3.1 SQ IN	3.9 SQ IN	10
VC230	2" ANTI VORTEX VENT CAP W/12 MESH SS SCREEN	2"	3.1 SQ IN	3.9 SQ IN	10
VC300	3" ANTI VORTEX VENT CAP WITHOUT SCREEN	3"	7 SQ IN	9 SQ IN	10
VC330	3" ANTI VORTEX VENT CAP W/10 MESH SS SCREEN	3"	7 SQ IN	9 SQ IN	1

ANTI VORTEX TANK FLANGES

FEATURES

- Standard with FKM
- Prevents swirl in bottom of tank

ANTI VORTEX TANK FLANGES			
PART NO	DESCRIPTION	HOLE SIZE	QTY
TF100AV	1" ANTI VORTEX TANK FLANGES	2¼"	1
TF125AV	1¼" ANTI VORTEX TANK FLANGES	2¼"	1
TF150AV	1½" ANTI VORTEX TANK FLANGES	3"	1
TF200AV	2" ANTI VORTEX TANK FLANGES	3"	1

BANJO Liquid Handling Products

ANSI FLANGES

THREADED ANSI FLANGES

PART NO	DESCRIPTION	LOT QTY
AF100	1" FEMALE THREADED ANSI FLANGE	10/BAG
AF150	1½" FEMALE THREADED ANSI FLANGE	10/BAG
AF200	2" FEMALE THREADED ANSI FLANGE	10
AF300	3" FEMALE THREADED ANSI FLANGE	5
AF400	4" FEMALE THREADED ANSI FLANGE	5

BLIND ANSI FLANGES

PART NO	DESCRIPTION	LOT QTY
AFB200	2" BLIND ANSI FLANGE	10/BAG
AFB300	3" BLIND ANSI FLANGE	5

ANSI FLANGE GASKETS

PART NO	DESCRIPTION	QTY
AF100G	1" ANSI FLANGE EPDM GASKET	1
AF100GV	1" ANSI FLANGE FKM GASKET	1
AF150G	1½" ANSI FLANGE EPDM GASKET	1
AF200G	2" ANSI FLANGE EPDM GASKET	1
AF200GV	2" ANSI FLANGE FKM GASKET	1
AF300G	3" ANSI FLANGE EPDM GASKET	1
AF300GV	3" ANSI FLANGE FKM GASKET	1
AF400G	4" ANSI FLANGE EPDM GASKET	1
AF400GV	4" ANSI FLANGE FKM GASKET	1

FEATURES

- Glass reinforced polypropylene
- Heavy duty

CAM LEVER COUPLINGS

¼"-4" POLYPROPYLENE

FEATURES

- Stainless steel rings, arms and pins
- Versatile — interchangeable with all types of cam lever couplings
- Precision molded — ensures a uniform and accurate fit
- Durable — polypropylene is glass reinforced for rugged strength
- Smooth operating — finger rings are designed for easy opening of cam levers
- Economical and superior in performance
- Where noted, parts must be ordered in bag quantities
- ¼" and ½" series couplings interchange with ¾" size couplings. Coupling ends are ¾" size.
- 1¼" series couplings interchange with 1" size couplings. Coupling ends are 1" size.
- 1½" x 1¼" couplings interchange with 1½" size couplings. Coupling ends are 1½" size.

POLYPROPYLENE CAM LEVER COUPLINGS

ITEM	DESCRIPTION	¼"	½"	¾"	1"	1¼"	1½" x 1¼"	1½"	2"	2½"	3"	3" 3 ARMS	4" 3 ARMS
A	MALE ADAPTER X FEMALE THREAD	75A1/4	75A1/2	75A3/4	100A	125A	150125A	150A	200A		300A		400A
B	FEMALE COUPLER X MALE THREAD		75B1/2	75B3/4	100B	125B	150125B	150B	200B		300B	303B	400B
C	FEMALE COUPLER X HOSE BARB		050C	075C	100C	125C	150125C	150C	200C		300C	303C	400C
D	FEMALE COUPLER X FEMALE THREAD		050D	075D	100D	125D	150125D	150D	200D		300D		400D
E	MALE ADAPTER X HOSE BARB		050E	075E	100E	125E	150125E	150E	200E		300E		400E
F	MALE ADAPTER X MALE THREAD		050F	075F	100F	125F	150125F	150F	200F		300F		400F
PL	PLUG FOR FEMALE COUPLER		75PL	75PL	100125PL	100125PL	150PL	150PL	200PL		300PL		400PL
CAP	CAP FOR MALE ADAPTER		075CAP	075CAP	100125CAP	100125CAP	150CAP	150CAP	200CAP	250CAP	300CAP		400CAP (2 arms)
CAPSH	CAP WITH SHORT ARMS						200CAPSH						

WARNING! Couplings should not be disconnected under pressure or with liquid in the line.

¼" SERIES POLY CAM LEVER COUPLINGS

PART NO	DESCRIPTION	MAX PSI	GASKET	LOT QTY
75A1/4	¾" MALE ADAPTER X ¼" FEMALE THREAD	300	N/A	10/BAG

½" SERIES POLY CAM LEVER COUPLINGS

PART NO	DESCRIPTION	MAX PSI	GASKET	LOT QTY
75A1/2	¾" MALE ADAPTER X ½" FEMALE THREAD	225	N/A	10/BAG
75B1/2	¾" FEMALE COUPLER X ½" MALE THREAD	300	EPDM	10/BAG
050C	¾" FEMALE COUPLER X ½" HOSE BARB	300	EPDM	10/BAG
050D	¾" FEMALE COUPLER X ½" FEMALE THREAD	300	EPDM	10/BAG
050E	¾" MALE ADAPTER X ½" HOSE BARB	300	N/A	10/BAG
050F	¾" MALE ADAPTER X ½" MALE THREAD	300	N/A	10/BAG
075CAP	¾" CAP X MALE ADAPTER	300	EPDM	10/BAG
75PL	¾" PLUG X FEMALE COUPLER	300	N/A	10/BAG

BANJO Liquid Handling Products

¾" SERIES POLY CAM LEVER COUPLINGS

PART NO	DESCRIPTION	MAX PSI	GASKET	LOT QTY
75A3/4	¾" MALE ADAPTER X ¾" FEMALE THREAD	225	N/A	10/BAG
75B3/4	¾" FEMALE COUPLER X ¾" MALE THREAD	300	EPDM	10/BAG
075C	¾" FEMALE COUPLER X ¾" HOSE BARB	300	EPDM	10/BAG
075D	¾" FEMALE COUPLER X ¾" FEMALE THREAD	300	EPDM	10/BAG
075E	¾" MALE ADAPTER X ¾" HOSE BARB	300	N/A	10/BAG
075F	¾" MALE ADAPTER X ¾" MALE THREAD	300	N/A	10/BAG
075CAP	¾" CAP X MALE ADAPTER	300	EPDM	10/BAG
75PL	¾" PLUG X FEMALE COUPLER	300	N/A	10/BAG

1" SERIES POLY CAM LEVER COUPLINGS

PART NO	DESCRIPTION	MAX PSI	GASKET	LOT QTY
100A	1" MALE ADAPTER X 1" FEMALE THREAD	300	N/A	10/BAG
100B	1" FEMALE COUPLER X 1" MALE THREAD	300	EPDM	10/BAG
100C	1" FEMALE COUPLER X 1" HOSE BARB	300	EPDM	10/BAG
100D	1" FEMALE COUPLER X 1" FEMALE THREAD	300	EPDM	10/BAG
100E	1" MALE ADAPTER X 1" HOSE BARB	300	N/A	10/BAG
100F	1" MALE ADAPTER X 1" MALE THREAD	300	N/A	10/BAG
100125CAP	1" CAP X MALE ADAPTER	300	EPDM	10/BAG
100125PL	1" PLUG X FEMALE COUPLER	300	N/A	10/BAG

1¼" SERIES POLY CAM LEVER COUPLINGS

PART NO	DESCRIPTION	MAX PSI	GASKET	LOT QTY
125A	1" MALE ADAPTER X 1¼" FEMALE THREAD	300	N/A	10/BAG
125B	1" FEMALE COUPLER X 1¼" MALE THREAD	300	EPDM	10/BAG
125C	1" FEMALE COUPLER X 1¼" HOSE BARB	300	EPDM	10/BAG
125D	1" FEMALE COUPLER X 1¼" FEMALE THREAD	300	EPDM	10/BAG
125E	1" MALE ADAPTER X 1¼" HOSE BARB	300	N/A	10/BAG
125F	1" MALE ADAPTER X 1¼" MALE THREAD	300	N/A	10/BAG
100125CAP	1" CAP X MALE ADAPTER	300	EPDM	10/BAG
100125PL	1" PLUG X FEMALE COUPLER	300	N/A	10/BAG

1½" X 1¼" SERIES POLY CAM LEVER COUPLINGS

PART NO	DESCRIPTION	MAX PSI	GASKET	LOT QTY
150125A	1½" MALE ADAPTER X 1¼" FEMALE THREAD	225	N/A	10/BAG
150125B	1½" FEMALE COUPLER X 1¼" MALE THREAD	300	EPDM	10
150125C	1½" FEMALE COUPLER X 1¼" HOSE BARB	300	EPDM	10
150125D	1½" FEMALE COUPLER X 1¼" FEMALE THREAD	300	EPDM	10
150125E	1½" MALE ADAPTER X 1¼" HOSE BARB	225	EPDM	10/BAG
150125F	1½" MALE ADAPTER X 1¼" MALE THREAD	300	N/A	10/BAG
150CAP	1½" CAP X MALE ADAPTER	300	EPDM	10
150PL	1½" PLUG X FEMALE COUPLER	225	N/A	10/BAG

1½" SERIES POLY CAM LEVER COUPLINGS

PART NO	DESCRIPTION	MAX PSI	GASKET	LOT QTY
150A	1½" MALE ADAPTER X 1½" FEMALE THREAD	225	N/A	10/BAG
150B	1½" FEMALE COUPLER X 1½" MALE THREAD	300	EPDM	10
150C	1½" FEMALE COUPLER X 1½" HOSE BARB	300	EPDM	10
150D	1½" FEMALE COUPLER X 1½" FEMALE THREAD	300	EPDM	10
150E	1½" MALE ADAPTER X 1½" HOSE BARB	200	N/A	10/BAG
150F	1½" MALE ADAPTER X 1½" MALE THREAD	300	N/A	10/BAG
150CAP	1½" CAP X MALE ADAPTER	300	EPDM	10
150PL	1½" PLUG X FEMALE COUPLER	225	N/A	10/BAG

¼"-4" POLYPROPYLENE

FEATURES

- Stainless steel rings, arms and pins
- Versatile — interchangeable with all types of cam lever couplings
- Precision molded — ensures a uniform and accurate fit
- Durable — polypropylene is glass reinforced for rugged strength
- Smooth operating — finger rings are designed for easy opening of cam levers
- Economical and superior in performance
- Standard with EPDM gaskets, FKM gaskets can be ordered separately on page 79
- Where noted, parts must be ordered in bag quantities
- ¼",⅜" and ½" series couplings interchange with ¾" size couplings. Coupling ends are ¾" size.
- 1¼" series couplings interchange with 1" size couplings. Coupling ends are 1" size.
- 1½" x 1¼" couplings interchange with 1½" size couplings. Coupling ends are 1½" size.

WARNING! Couplings should not be disconnected under pressure or with liquid in the line.

CAM LEVER COUPLINGS

¼"-4" POLYPROPYLENE

FEATURES

- Stainless steel rings, arms and pins
- Versatile — interchangeable with all types of cam lever couplings
- Precision molded — ensures a uniform and accurate fit
- Durable — polypropylene is glass reinforced for rugged strength
- Smooth operating — finger rings are designed for easy opening of cam levers
- Economical and superior in performance
- Where noted, parts must be ordered in bag quantities
- ¼",⅜" and ½" series couplings interchange with ¾" size couplings. Coupling ends are ¾" size.
- 1¼" series couplings interchange with 1" size couplings. Coupling ends are 1" size.
- 1½" x 1¼" couplings interchange with 1½" size couplings. Coupling ends are 1½" size.

WARNING! Couplings should not be disconnected under pressure or with liquid in the line.

2" SERIES POLY CAM LEVER COUPLINGS

PART NO	DESCRIPTION	MAX PSI	GASKET	LOT QTY
200A	2" MALE ADAPTER X 2" FEMALE THREAD	225	N/A	10/BAG
200B	2" FEMALE COUPLER X 2" MALE THREAD	225	EPDM	20
201B	2" FEMALE COUPLER X 2" EXTENDED MALE THREAD	200	EPDM	10
200C	2" FEMALE COUPLER X 2" HOSE BARB	225	EPDM	20
200D	2" FEMALE COUPLER X 2" FEMALE THREAD	200	EPDM	20
200E	2" MALE ADAPTER X 2" HOSE BARB	200	N/A	10/BAG
200F	2" MALE ADAPTER X 2" MALE THREAD	300	N/A	10/BAG
200CAP	2" CAP X MALE ADAPTER	200	EPDM	20
200CAPSH	2" CAP X MALE ADAPTER W/SHORT ARMS	200	EPDM	10
200PL	2" PLUG X FEMALE COUPLER	225	N/A	10/BAG

2" X 1½" SERIES POLY CAM LEVER COUPLINGS

PART NO	DESCRIPTION	MAX PSI	GASKET	LOT QTY
200150C	2" FEMALE COUPLER X 1½" HOSE BARB	300	EPDM	10

2½" SERIES POLY CAM LEVER COUPLINGS

PART NO	DESCRIPTION	MAX PSI	GASKET	QTY
250CAP	2½" CAP X MALE ADAPTER	300	EPDM	1

3" SERIES POLY CAM LEVER COUPLINGS

PART NO	DESCRIPTION	MAX PSI	GASKET	LOT QTY
300A	3" MALE ADAPTER X 3" FEMALE THREAD	100	N/A	10
300B	3" FEMALE COUPLER X 3" MALE THREAD	150	EPDM	10
303B	3" FEMALE COUPLER X 3" EXTENDED MALE THREAD	200	EPDM	10
303B200A	3" FEMALE COUPLER W/ 3 ARMS X 2" MALE ADAPTER	200	EPDM	10
300C	3" FEMALE COUPLER X 3" HOSE BARB	200	EPDM	10
303C	3" FEMALE COUPLER W/ 3 ARMS X 3" HOSE BARB	200	EPDM	10
300D	3" FEMALE COUPLER X 3" FEMALE THREAD	200	EPDM	10
300E	3" MALE ADAPTER X 3" HOSE BARB	150	N/A	10
300F	3" MALE ADAPTER X 3" MALE THREAD	100	N/A	10
300CAP	3" CAP X MALE ADAPTER	100	EPDM	10
300PL	3" PLUG X FEMALE COUPLER	150	N/A	10

4" SERIES POLY CAM LEVER COUPLINGS

PART NO	DESCRIPTION	MAX PSI	GASKET	LOT QTY
400A	4" MALE ADAPTER X 4" FEMALE THREAD	75	N/A	10
400B	4" FEMALE COUPLER X 4" MALE THREAD	150	EPDM	10
400C	4" FEMALE COUPLER X 4" HOSE BARB	150	EPDM	10
400D	4" FEMALE COUPLER X 4" FEMALE THREAD	100	EPDM	10
400E	4" MALE ADAPTER X 4" HOSE BARB	50	N/A	10
400F	4" MALE ADAPTER X 4" MALE THREAD	75	N/A	10
400CAP	4" CAP X MALE ADAPTER (W/2 ARMS)	100	EPDM	10
400PL	4" PLUG X FEMALE COUPLER	75	N/A	10

EASY ACTION LOCKING LEVER!

1½"- 2" SERIES LOCKING POLY CAM LEVER COUPLINGS

PART NO	DESCRIPTION	MAX PSI	GASKET	QTY
L200B	2" FEMALE COUPLER X 2" MALE THREAD	225	EPDM	1
L200C	2" FEMALE COUPLER X 2" HOSE BARB	225	EPDM	1
L200D	2" FEMALE COUPLER X 2" FEMALE THREAD	200	EPDM	1
L200CAP	2" CAP X MALE ADAPTER	200	EPDM	1

SPOOL ADAPTERS

PART NO	DESCRIPTION	MAX PSI	GASKET	LOT QTY
200FF	2" MALE ADAPTER X 2" MALE ADAPTER	150	N/A	10/BAG
300F200F	3" MALE ADAPTER X 2" MALE ADAPTER	75	N/A	10
300FF	3" MALE ADAPTER X 3" MALE ADAPTER	75	N/A	10

EPDM

FKM

REPLACEMENT PARTS

PART NO	DESCRIPTION	LOT QTY
100RING	RING FITS ¾" & 1"	1
150RING	RING FITS 1½", 2", 3", 4"	1
150(200)K	1½", 2" SS CAM ARM W/RING	1
300K	3" SS CAM ARM WITH RING	1
V20207	11" LANYARD	1
75G	½" & ¾" EPDM GASKET	25
100G	1" & 1¼" EPDM GASKET	25
100GV	1" & 1¼" FKM GASKET	25
150G	1½" EPDM GASKET	25
150GV	1½" FKM GASKET	25
200G	2" EPDM GASKET	25
200GV	2" FKM GASKET	25
300G	3" EPDM GASKET	25
300GV	3" FKM GASKET	25
400G	4" EPDM GASKET	1
200KL	2" LOCKING CAM ARM WITH RING FITS 1½" & 2"	1
200PKL	2" COUPLING PIN FITS 1½" & 2"	1
200P	2" COUPLING PIN	1
300P	3" COUPLING PIN	1

LOCKING ARM WITH RING

PIN

¼"-4" POLYPROPYLENE

FEATURES

- Chemical resistant to protect against corrosion
- Versatile to interchange with all types of cam lever couplings
- Smooth operation makes connections quick and easy
- Where noted, parts must be ordered in bag quantities
- Locking cam arm lever is not intended to be used as a security device or prevent unauthorized opening of coupling assembly.

WARNING! Couplings should not be disconnected under pressure or with liquid in the line.

1½"-2" 90° & 45° POLYPROPYLENE

FEATURES

- Precision molded in polypropylene, reinforced with fiberglass for strength
- Stainless steel rings, arms and pins resist corrosion
- 90° angle couplings and adapters will reduce the number of elbows and other pipe fittings used in plumbing applications

WARNING! Couplings should not be disconnected under pressure or with liquid in the line.

A

B

C

D

F90

F45

1½" 90° POLY CAM LEVER COUPLINGS				
PART NO	DESCRIPTION	MAX PSI	GASKET	LOT QTY
150A90	1½" 90° MALE ADAPTER X 1½" FEMALE THREAD	225	N/A	10/BAG
150C90	1½" 90° FEMALE COUPLER X 1½" HOSE BARB	225	EPDM	10
150D90	1½" 90° FEMALE COUPLER X 1½" FEMALE THREAD	300	EPDM	10
150F90	1½" 90° MALE ADAPTER X 1½" MALE THREAD	300	N/A	10/BAG

2" 90° SERIES POLY CAM LEVER COUPLINGS				
PART NO	DESCRIPTION	MAX PSI	GASKET	LOT QTY
200A90	2" 90° MALE ADAPTER X 2" FEMALE THREAD	225	N/A	10/BAG
200B90	2" 90° FEMALE COUPLER X 2" MALE THREAD	225	EPDM	10
200C90	2" 90° FEMALE COUPLER X 2" HOSE BARB	225	EPDM	10
200D90	2" 90° FEMALE COUPLER X 2" FEMALE THREAD	200	EPDM	10
200F90	2" 90° MALE ADAPTER X 2" MALE THREAD	225	N/A	10/BAG

2" 45° POLY CAM LEVER COUPLINGS				
PART NO	DESCRIPTION	MAX PSI	GASKET	LOT QTY
200F45	2" 45° MALE ADAPTER X 2" MALE THREAD	225	N/A	10/BAG

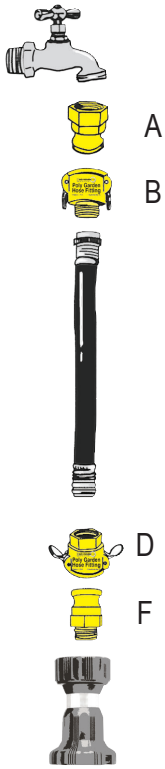

GARDEN HOSE FITTINGS

PART NO	DESCRIPTION	MAX PSI	LOT QTY
GHFT075A	¾" ADAPTER X ¾" GARDEN HOSE FEMALE THREAD	225	10/BAG
GHMT075B	¾" COUPLER X ¾" GARDEN HOSE MALE THREAD	300	10/BAG
GHFT075D	¾" COUPLER X ¾" GARDEN HOSE FEMALE THREAD	300	10/BAG
GHMT075F	¾" ADAPTER X ¾" GARDEN HOSE MALE THREAD	300	10/BAG
GHFT075MPT	¾" MALE NPT X ¾" GARDEN HOSE FEMALE THREAD	300	10/BAG
GHMT075FPT	¾" FEMALE NPT X ¾" GARDEN HOSE MALE THREAD	300	10/BAG
GHMT075MPT	¾" MALE NPT X ¾" GARDEN HOSE MALE THREAD	300	10/BAG
GHFT075G	¾" GARDEN HOSE FITTING GASKET	N/A	25

GARDEN HOSE FITTINGS

FEATURES

- Same construction and design that farmers use for their heavy spraying applications.
- Rugged, secure quick-connect cam arms
- Heavy-duty thick wall reinforced polypropylene
- Proven, leak-free construction
- Full flow design

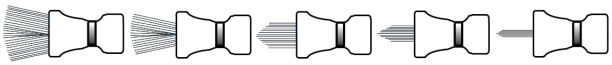

Spray nozzle patterns

GARDEN HOSE NOZZLE

PART NO	DESCRIPTION	MAX PSI	QTY
GHN075	¾" GARDEN HOSE SPRAY NOZZLE	N/A	1

GARDEN HOSE NOZZLE

FEATURES

- Heavy duty machined aluminum construction stands up to hard use
- Comfort grip soft rubber
- Resists dents, mars and scratches; protects any surface that comes in contact with nozzle
- Aluminum hose connection provides a tight fit, will not rust
- Multiple spray pattern adjusts from a powerful jet stream to a gentle fan spray. Ideal for all your spraying needs.
- Stainless steel spray cap for precise spray patterns

SUPER CLAMPS

FEATURES

- Stainless steel construction
- 304 stainless steel bolt with 316 stainless steel nut to prevent seizing
- 360° sealing surface
- Ideal for high torque applications
- Strong, positive connections where ordinary hose clamps fail
- T-bolt design
- 3 spot welds for extra strength
- Sold in bags of 10 only
- Torque specifications: working torque 50-80 inch pounds, maximum torque 125 inch pounds
- Please note new Min-Max Diameter measurements.

SUPER CLAMPS				
PART NO	DESCRIPTION	MIN-MAX DIAMETER	MAX TORQUE	LOT QTY
TC120	1" T-BOLT HOSE CLAMP	1.18"-1.34"	75 IN-LBS	10/BAG
TC130	1¼" T-BOLT HOSE CLAMP	1.34"-1.50"	75 IN-LBS	10/BAG
TC150	1½" T-BOLT HOSE CLAMP	1.50"-1.62"	75 IN-LBS	10/BAG
TC162	1¼" T-BOLT HOSE CLAMP	1.62"-1.87"	75 IN-LBS	10/BAG
TC181	1½" T-BOLT HOSE CLAMP	1.84"-2.12"	75 IN-LBS	10/BAG
TC193	1½" T-BOLT HOSE CLAMP	1.93"-2.24"	75 IN-LBS	10/BAG
TC206	2" T-BOLT HOSE CLAMP	2.17"-2.48"	75 IN-LBS	10/BAG
TC218	2" T-BOLT HOSE CLAMP	2.18"-2.52"	75 IN-LBS	10/BAG
TC224	2" T-BOLT HOSE CLAMP	2.24"-2.58"	75 IN-LBS	10/BAG
TC231	2" T-BOLT HOSE CLAMP	2.31"-2.65"	75 IN-LBS	10/BAG
TC250	2" T-BOLT HOSE CLAMP	2.50"-2.81"	75 IN-LBS	10/BAG
TC287	2" T-BOLT HOSE CLAMP	2.83"-3.21"	75 IN-LBS	10/BAG
TC312	3" T-BOLT HOSE CLAMP	3.24"-3.58"	75 IN-LBS	10/BAG
TC331	3" T-BOLT HOSE CLAMP	3.27"-3.65"	75 IN-LBS	10/BAG
TC343	3" T-BOLT HOSE CLAMP	3.39"-3.77"	75 IN-LBS	10/BAG
TC425	4" T-BOLT HOSE CLAMP	4.21"-4.59"	75 IN-LBS	10/BAG
TC438	4" T-BOLT HOSE CLAMP	4.28"-4.69"	125 IN-LBS	10/BAG
TC456	4" T-BOLT HOSE CLAMP	4.46"-4.87"	125 IN-LBS	10/BAG

NIPPLES

PART NO	DESCRIPTION	MAX PSI	LOT QTY
NIP025-SH	¼" SHORT POLY NIPPLE	300	10/BAG
NIP038-SH	⅜" SHORT POLY NIPPLE	300	10/BAG
NIP050-SH	½" SHORT POLY NIPPLE	300	10/BAG
NIP050-3	½" X 3" POLY NIPPLE	300	10/BAG
NIP075-SH	¾" SHORT POLY NIPPLE	300	10/BAG
NIP075-4	¾" X 4" POLY NIPPLE	300	10/BAG
NIP075-6	¾" X 6" POLY NIPPLE	300	10/BAG
NIP100-SH	1" SHORT POLY NIPPLE	300	10/BAG
NIP100-4	1" X 4" POLY NIPPLE	300	10/BAG
NIP100-6	1" X 6" POLY NIPPLE	300	10/BAG
NIP125-SH	1¼" SHORT POLY NIPPLE	300	10/BAG
NIP125-4	1¼" X 4" POLY NIPPLE	300	10/BAG
NIP125-6	1¼" X 6" POLY NIPPLE	300	10/BAG
NIP150-SH	1½" SHORT POLY NIPPLE	300	10/BAG
NIP150-3	1½" X 3" POLY NIPPLE	300	10/BAG
NIP150-4	1½" X 4" POLY NIPPLE	300	10/BAG
NIP150-5	1½" X 5" POLY NIPPLE	300	10/BAG
NIP150-6	1½" X 6" POLY NIPPLE	300	10/BAG
NIP200-SH	2" SHORT POLY NIPPLE	300	10/BAG
NIP200-4	2" X 4" POLY NIPPLE	300	10/BAG
NIP200-6	2" X 6" POLY NIPPLE	300	10/BAG
NIP300-SH	3" SHORT POLY NIPPLE	300	10/BAG
NIP300-4	3" X 4" POLY NIPPLE	300	10/BAG
NIP300-6	3" X 6" POLY NIPPLE	300	10

REDUCING NIPPLES

PART NO	DESCRIPTION	MAX PSI	LOT QTY
RN050-038	½" X ⅜" POLY REDUCING NIPPLE	300	10/BAG
RN075-050	¾" X ½" POLY REDUCING NIPPLE	300	10/BAG
RN100-050	1" X ½" POLY REDUCING NIPPLE	300	10/BAG
RN100-075	1" X ¾" POLY REDUCING NIPPLE	300	10/BAG
RN125-075	1¼" X ¾" POLY REDUCING NIPPLE	300	10/BAG
RN125-100	1¼" X 1" POLY REDUCING NIPPLE	300	10/BAG
RN150-100	1½" X 1" POLY REDUCING NIPPLE	300	10/BAG
RN150-125	1½" X1¼" POLY REDUCING NIPPLE	300	10/BAG
RN200-125	2" X 1¼" POLY REDUCING NIPPLE	300	10/BAG
RN200-150	2" X 1½" POLY REDUCING NIPPLE	300	10/BAG
RN300-200	3" X 2" POLY REDUCING NIPPLE	300	10/BAG

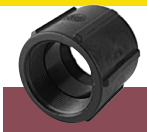

PIPE COUPLINGS

PART NO	DESCRIPTION	MAX PSI	LOT QTY
CPLG025	¼" POLY PIPE COUPLING	300	10/BAG
CPLG038	⅜" POLY PIPE COUPLING	300	10/BAG
CPLG050	½" POLY PIPE COUPLING	300	10/BAG
CPLG075	¾" POLY PIPE COUPLING	300	10/BAG
CPLG100	1" POLY PIPE COUPLING	300	10/BAG
CPLG125	1¼" POLY PIPE COUPLING	300	10/BAG
CPLG150	1½" POLY PIPE COUPLING	300	10/BAG
CPLG200	2" POLY PIPE COUPLING	300	10/BAG
CPLG300	3" POLY PIPE COUPLING	225	5

REDUCING COUPLINGS

PART NO	DESCRIPTION	MAX PSI	LOT QTY
RC100-075	1" X ¾" POLY REDUCING COUPLING	300	10/BAG
RC150-100	1½" X 1" POLY REDUCING COUPLING	300	10/BAG
RC150-125	1½" X1¼" POLY REDUCING COUPLING	300	10/BAG
RC200-050	2" X ½" POLY REDUCING COUPLING	300	10/BAG
RC200-100	2" X 1" POLY REDUCING COUPLING	300	10/BAG
RC200-125	2" X 1¼" POLY REDUCING COUPLING	300	10/BAG
RC200-150	2" X 1½" POLY REDUCING COUPLING	300	10/BAG
RC300-200	3" X 2" POLY REDUCING COUPLING	300	5

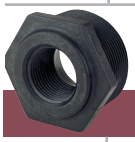

REDUCING BUSHINGS

PART NO	DESCRIPTION	MAX PSI	LOT QTY
RB038-025	⅜" MPT X ¼" FPT REDUCING BUSHING	300	10/BAG
RB050-025	½" MPT X ¼" FPT REDUCING BUSHING	300	10/BAG
RB050-038	½" MPT X ⅜" FPT REDUCING BUSHING	300	10/BAG
RB075-025	¾" MPT X ¼" FPT REDUCING BUSHING	300	10/BAG
RB075-038	¾" MPT X ⅜" FPT REDUCING BUSHING	300	10/BAG
RB075-050	¾" MPT X ½" FPT REDUCING BUSHING	300	10/BAG
RB100-025	1" MPT X ¼" FPT REDUCING BUSHING	300	10/BAG
RB100-050	1" MPT X ½" FPT REDUCING BUSHING	300	10/BAG
RB100-075	1" MPT X ¾" FPT REDUCING BUSHING	300	10/BAG
RB125-075	1¼" MPT X ¾" FPT REDUCING BUSHING	300	10/BAG
RB125-100	1¼" MPT X 1" FPT REDUCING BUSHING	300	10/BAG
RB150-075	1½" MPT X ¾" FPT REDUCING BUSHING	300	10/BAG
RB150-100	1½" MPT X 1" FPT REDUCING BUSHING	300	10/BAG
RB150-125	1½" MPT X1¼" FPT REDUCING BUSHING	300	10/BAG
RB200-075	2" MPT X ¾" FPT REDUCING BUSHING	300	10/BAG
RB200-100	2" MPT X 1" FPT REDUCING BUSHING	300	10/BAG
RB200-125	2" MPT X 1¼" FPT REDUCING BUSHING	300	10/BAG
RB200-150	2" MPT X 1½" FPT REDUCING BUSHING	300	10/BAG
RB300-150	3" MPT X 1½" FPT REDUCING BUSHING	300	10
RB300-200	3" MPT X 2" FPT REDUCING BUSHING	300	10/BAG
RB400-300	4" MPT X 3" FPT REDUCING BUSHING	300	5

FEATURES

- Glass reinforced polypropylene
- Heavy duty (Schedule 80)
- Lightweight with excellent strength
- NPT threads
- Excellent chemical resistance
- Where noted, parts must be ordered in bag quantities

PIPE FITTINGS

FEATURES

- Glass reinforced polypropylene
- Heavy duty (Schedule 80)
- Lightweight with excellent strength
- NPT threads
- Excellent chemical resistance
- Where noted, parts must be ordered in bag quantities

PIPE CAPS

PART NO	DESCRIPTION	MAX PSI	LOT QTY
CAP038	⅜" POLY PIPE CAP	300	10/BAG
CAP050	½" POLY PIPE CAP	300	10/BAG
CAP075	¾" POLY PIPE CAP	300	10/BAG
CAP100	1" POLY PIPE CAP	300	10/BAG
CAP125	1¼" POLY PIPE CAP	300	10/BAG
CAP150	1½" POLY PIPE CAP	300	10/BAG
CAP200	2" POLY PIPE CAP	300	10/BAG
CAP300	3" POLY PIPE CAP	300	5

CROSSES

PART NO	DESCRIPTION	MAX PSI	LOT QTY
CR050	½" POLY CROSS	300	10/BAG
CR075	¾" POLY CROSS	300	10/BAG
CR100	1" POLY CROSS	300	10/BAG
CR125	1¼" POLY CROSS	300	10/BAG
CR150	1½" POLY CROSS	300	10
CR200	2" POLY CROSS	300	10

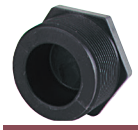

PIPE PLUGS

PART NO	DESCRIPTION	MAX PSI	LOT QTY
PLUG025	¼" POLY PIPE PLUG	300	10/BAG
PLUG038	⅜" POLY PIPE PLUG	300	10/BAG
PLUG050	½" POLY PIPE PLUG	300	10/BAG
PLUG075	¾" POLY PIPE PLUG	300	10/BAG
PLUG100	1" POLY PIPE PLUG	300	10/BAG
PLUG125	1¼" POLY PIPE PLUG	300	10/BAG
PLUG150	1½" POLY PIPE PLUG	300	10/BAG
PLUG200	2" POLY PIPE PLUG	300	10/BAG
PLUG300	3" POLY PIPE PLUG	300	10

TEES

PART NO	DESCRIPTION	MAX PSI	LOT QTY
TEE025	¼" POLY TEE	300	10/BAG
TEE038	⅜" POLY TEE	300	10/BAG
TEE050	½" POLY TEE	300	10/BAG
TEE075	¾" POLY TEE	300	10/BAG
TEE100	1" POLY TEE	300	10/BAG
TEE125	1¼" POLY TEE	300	10/BAG
TEE150	1½" POLY TEE	300	10/BAG
TEE200	2" POLY TEE	300	10/BAG
TEE300	3" POLY TEE	225	10

HOSE BARB CROSS

PART NO	DESCRIPTION	MAX PSI	LOT QTY
HBC050075	½" X ¾" HOSE BARB CROSS	300	10/BAG

GAUGE PORT TEE

PART NO	DESCRIPTION	MAX PSI	LOT QTY
TEG075	¾" POLY TEE W/ ¼" FEMALE THREAD	300	10/BAG
TEG100	1" POLY TEE W/ ¼" FEMALE THREAD	300	10/BAG

90° ELBOWS

PART NO	DESCRIPTION	MAX PSI	LOT QTY
EL025-90	¼" 90° POLY ELBOW	300	10/BAG
EL038-90	⅜" 90° POLY ELBOW	300	10/BAG
EL050-90	½" 90° POLY ELBOW	300	10/BAG
EL075-90	¾" 90° POLY ELBOW	300	10/BAG
EL100-90	1" 90° POLY ELBOW	300	10/BAG
EL125-90	1¼" 90° POLY ELBOW	300	10/BAG
EL150-90	1½" 90° POLY ELBOW	300	10/BAG
EL200-90	2" 90° POLY ELBOW	300	10/BAG
EL300-90	3" 90° POLY ELBOW	300	10

45° STREET ELBOWS

PART NO	DESCRIPTION	MAX PSI	LOT QTY
SL075-45	¾" 45° POLY STREET ELBOW	300	10/BAG
SL100-45	1" 45° POLY STREET ELBOW	300	10/BAG
SL125-45	1¼" 45° POLY STREET ELBOW	300	10/BAG
SL150-45	1½" 45° POLY STREET ELBOW	300	10/BAG
SL200-45	2" 45° POLY STREET ELBOW	225	10/BAG
SL300-45	3" 45° POLY STREET ELBOW	300	5

45° ELBOW

PART NO	DESCRIPTION	MAX PSI	LOT QTY
EL100-45	1" 45° POLY ELBOW	300	10/BAG

90° HOSE BARB ELBOW

PART NO	DESCRIPTION	MAX PSI	LOT QTY
HBB20012590	2" X 1¼" 90° POLY HOSE BARB ELBOW	300	10/BAG

90° STREET ELBOWS

PART NO	DESCRIPTION	MAX PSI	LOT QTY
SL025-90	¼" 90° POLY STREET ELBOW	300	10/BAG
SL038-90	⅜" 90° POLY STREET ELBOW	300	10/BAG
SL050-90	½" 90° POLY STREET ELBOW	300	10/BAG
SL075-90	¾" 90° POLY STREET ELBOW	300	10/BAG
SL100-90	1" 90° POLY STREET ELBOW	300	10/BAG
SL125-90	1¼" 90° POLY STREET ELBOW	300	10/BAG
SL150-90	1½" 90° POLY STREET ELBOW	300	10/BAG
SL200-90	2" 90° POLY STREET ELBOW	300	10/BAG
SL300-90	3" 90° POLY STREET ELBOW	300	10

90° HOSE BARB ELBOW

PART NO	DESCRIPTION	MAX PSI	LOT QTY
HBEL100-90	1" 90° POLY HOSE BARB ELBOW	300	10/BAG
HBEL150/100-90	1½" X 1" 90° POLY HOSE BARB ELBOW	300	10/BAG

PIPE FITTINGS

FEATURES

- Glass reinforced polypropylene
- Heavy duty (Schedule 80)
- Lightweight with excellent strength
- NPT threads
- Excellent chemical resistance
- Where noted, parts must be ordered in bag quantities

HOSE BARBS

FEATURES

- Glass reinforced polypropylene
- Heavy duty (Schedule 80)
- Lightweight with excellent strength
- NPT threads
- Excellent chemical resistance
- Where noted, parts must be ordered in bag quantities

STRAIGHT HOSE BARBS

PART NO	DESCRIPTION	MAX PSI	LOT QTY
HB025	¼" MALE THREAD X ¼" HOSE BARB	300	10/BAG
HB025-038	¼" MALE THREAD X ⅜" HOSE BARB	300	10/BAG
HB025-050	¼" MALE THREAD X ½" HOSE BARB	300	10/BAG
HB038	⅜" MALE THREAD X ⅜" HOSE BARB	300	10/BAG
HB038-050	⅜" MALE THREAD X ½" HOSE BARB	300	10/BAG
HB050-025	½" MALE THREAD X ¼" HOSE BARB	300	10/BAG
HB050-038	½" MALE THREAD X ⅜" HOSE BARB	300	10/BAG
HB050	½" MALE THREAD X ½" HOSE BARB	300	10/BAG
HB050-075	½" MALE THREAD X ¾" HOSE BARB	300	10/BAG
HB075-038	¾" MALE THREAD X ⅜" HOSE BARB	300	10/BAG
HB075-050	¾" MALE THREAD X ½" HOSE BARB	300	10/BAG
HB075-058	¾" MALE THREAD X ⅝" HOSE BARB	300	10/BAG
HB075	¾" MALE THREAD X ¾" HOSE BARB	300	10/BAG
HB075-100	¾" MALE THREAD X 1" HOSE BARB	300	10/BAG
HB100-075	1" MALE THREAD X ¾" HOSE BARB	300	10/BAG
HB100	1" MALE THREAD X 1" HOSE BARB	300	10/BAG
HB100-125	1" MALE THREAD X 1¼" HOSE BARB	300	10/BAG
HB125-075	1¼" MALE THREAD X ¾" HOSE BARB	300	10/BAG
HB125-100	1¼" MALE THREAD X 1" HOSE BARB	300	10/BAG
HB125	1¼" MALE THREAD X 1¼" HOSE BARB	300	10/BAG
HB125-150	1¼" MALE THREAD X 1½" HOSE BARB	300	10/BAG
HB150-100	1½" MALE THREAD X 1" HOSE BARB	300	10/BAG
HB150-125	1½" MALE THREAD X 1¼" HOSE BARB	300	10/BAG
HB150	1½" MALE THREAD X 1½" HOSE BARB	300	10/BAG
HB150-200	1½" MALE THREAD X 2" HOSE BARB	300	10/BAG
HB200-150	2" MALE THREAD X 1½" HOSE BARB	300	10/BAG
HB200	2" MALE THREAD X 2" HOSE BARB	300	10/BAG
HB300	3" MALE THREAD X 3" HOSE BARB	225	10
HB400	4" MALE THREAD X 4" HOSE BARB	150	1

90° HOSE BARBS

PART NO	DESCRIPTION	MAX PSI	LOT QTY
HB025-90	¼" MALE THREAD X ¼" 90° HOSE BARB	300	10/BAG
HB025/038-90	¼" MALE THREAD X ⅜" 90° HOSE BARB	300	10/BAG
HB025/050-90	¼" MALE THREAD X ½" 90° HOSE BARB	300	10/BAG
HB038-90	⅜" MALE THREAD X ⅜" 90° HOSE BARB	300	10/BAG
HB050/038-90	½" MALE THREAD X ⅜" 90° HOSE BARB	300	10/BAG
HB050-90	½" MALE THREAD X ½" 90° HOSE BARB	300	10/BAG
HB050/075-90	½" MALE THREAD X ¾" 90° HOSE BARB	300	10/BAG
HB075/050-90	¾" MALE THREAD X ½" 90° HOSE BARB	300	10/BAG
HB075-90	¾" MALE THREAD X ¾" 90° HOSE BARB	300	10/BAG
HB075/100-90	¾" MALE THREAD X 1" 90° HOSE BARB	300	10/BAG
HB100/075-90	1" MALE THREAD X ¾" 90° HOSE BARB	300	10/BAG
HB100-90	1" MALE THREAD X 1" 90° HOSE BARB	300	10/BAG
HB100/125-90	1" MALE THREAD X 1¼" 90° HOSE BARB	300	10/BAG
HB125/100-90	1¼" MALE THREAD X 1" 90° HOSE BARB	300	10/BAG
HB125-90	1¼" MALE THREAD X 1¼" 90° HOSE BARB	300	10/BAG
HB125/150-90	1¼" MALE THREAD X 1½" 90° HOSE BARB	300	10/BAG
HB150/125-90	1½" MALE THREAD X 1¼" 90° HOSE BARB	300	10/BAG
HB150-90	1½" MALE THREAD X 1½" 90° HOSE BARB	300	10/BAG
HB200/150-90	2" MALE THREAD X 1½" 90° HOSE BARB	300	10/BAG
HB200-90	2" MALE THREAD X 2" 90° HOSE BARB	300	10/BAG
HB300-90	3" MALE THREAD X 3" 90° HOSE BARB	225	10

FEMALE HOSE BARBS

PART NO	DESCRIPTION	MAX PSI	LOT QTY
HBF075	¾" FEMALE THREAD X ¾" HOSE BARB	300	10/BAG
HBF075-90	¾" FEMALE THREAD X ¾" 90° HOSE BARB	300	10/BAG
HBF075-100	¾" FEMALE THREAD X 1" HOSE BARB	300	10/BAG
HBF100	1" FEMALE THREAD X 1" HOSE BARB	300	10/BAG

316 STAINLESS STEEL HOSE BARBS

PART NO	DESCRIPTION	MAX PSI	LOT QTY
HB025SS	¼" MALE THREAD X ¼" HOSE BARB	300	10
HB025-038SS	¼" MALE THREAD X ⅜" HOSE BARB	300	10
HB025-050SS	¼" MALE THREAD X ½" HOSE BARB	300	10
HB038SS	⅜" MALE THREAD X ⅜" HOSE BARB	300	10
HB038-050SS	⅜" MALE THREAD X ½" HOSE BARB	300	10
HB050SS	½" MALE THREAD X ½" HOSE BARB	300	10
HB050-058SS	½" MALE THREAD X ⅝" HOSE BARB	300	1
HB050-075SS	½" MALE THREAD X ¾" HOSE BARB	300	10
HB075-050SS	¾" MALE THREAD X ½" HOSE BARB	300	10
HB075SS	¾" MALE THREAD X ¾" HOSE BARB	300	10
HB075-100SS	¾" MALE THREAD X 1" HOSE BARB	300	1
HB100-075SS	1" MALE THREAD X ¾" HOSE BARB	300	1
HB100SS	1" MALE THREAD X 1" HOSE BARB	300	10
HB125SS	1¼" MALE THREAD X 1¼" HOSE BARB	300	1
HB150SS	1½" MALE THREAD X 1½" HOSE BARB	300	10
HB200SS	2" MALE THREAD X 2" HOSE BARB	300	1
HB300SS	3" MALE THREAD X 3" HOSE BARB	300	1

BANJO Liquid Handling Products

HOSE BARB TEES

PART NO	DESCRIPTION	MAX PSI	LOT QTY
HBT038	⅜" HOSE BARB TEE	300	10/BAG
HBT050	½" HOSE BARB TEE	300	10/BAG
HBT050-075	½" X ½" X ¾" HOSE BARB TEE	300	10/BAG
HBT075-050	¾" X ¾" X ½" HOSE BARB TEE	300	10/BAG
HBT075	¾" HOSE BARB TEE	300	10/BAG
HBT075-100	¾" X ¾" X 1" HOSE BARB TEE	300	10/BAG
HBT100-075	1" X 1" X ¾" HOSE BARB TEE	300	10/BAG
HBT100	1" HOSE BARB TEE	300	10/BAG
HBT200	2" HOSE BARB TEE	300	10
HBT300	3" HOSE BARB TEE	300	1

HOSE MENDERS

PART NO	DESCRIPTION	MAX PSI	LOT QTY
HM038	⅜" X ⅜" HOSE BARB	300	10/BAG
HM050	½" X ½" HOSE BARB	300	10/BAG
HM075	¾" X ¾" HOSE BARB	300	10/BAG
HM100	1" X 1" HOSE BARB	300	10/BAG
HM125	1¼" X 1¼" HOSE BARB	300	10/BAG
HM150	1½" X 1½" HOSE BARB	300	10/BAG
HM200	2" X 2" HOSE BARB	300	10/BAG
HM300	3" X 3" HOSE BARB	300	10

HOSE BARB THREADED TEES

PART NO	DESCRIPTION	MAX PSI	LOT QTY
HBT100-100	1" HOSE BARB X 1" HOSE BARB X 1" MALE THREAD HOSE BARB TEE	300	10/BAG
HBT150-100	1½" HOSE BARB X 1½" HOSE BARB X 1" MALE THREAD HOSE BARB TEE	300	10/BAG
HBT150-150	1½" HOSE BARB X 1½" HOSE BARB X1½" MALE THREAD HOSE BARB TEE	300	10/BAG

SWIVELS

PART NO	DESCRIPTION	MAX PSI	LOT QTY
SW100	1" MALE X 1" FEMALE SWIVEL	300	10
SW150	1½" MALE X 1½" FEMALE SWIVEL	300	1
SW220	2" FULL PORT MALE X 2" FULL PORT FEMALE SWIVEL	150	1

SS HOSE BARB THREADED TEES

PART NO	DESCRIPTION	MAX PSI	QTY
HBT075-050SS	¾" HOSE BARB X ¾" HOSE BARB X ½" HOSE BARB TEE	N/A	1

8 STATION MANIFOLD

PART NO	DESCRIPTION	MAX PSI	QTY
TM075/050	8 STATION MANIFOLD ¾" INLET X ½" OUTLET, ¼" GAUGE PORT	225	1

PIPE FITTINGS

FEATURES

- Glass reinforced polypropylene
- Heavy duty (Schedule 80)
- Lightweight with excellent strength
- NPT threads
- Excellent chemical resistance
- Where noted, parts must be ordered in bag quantities

Recommended procedure for sealing pipe threads:

We DO NOT recommend using pipe tape. Pipe tape enlarges the outside diameter of the male thread and may cause the female thread to split. We recommend using a pipe thread sealant. Use on clean tapered threads. Apply a thick even coat on male threads using brush applicator. For pipe diameters smaller than 1¼" apply to male threads only. For 1¼" and larger sizes apply to both male and female threads. Avoid applying excessive amounts. Hand tighten joints and then torque another ½ to ¾ turn until threads seal.

PIPE SEALANT

PART NO	DESCRIPTION	LOT QTY
RS21	RECTORSEAL® NO. 21™ (8 OZ W/ BRUSH IN CAP-24/CASE)	1
RSTB	RECTORSEAL® TRU-BLU™ (8 OZ W/ BRUSH IN CAP-24/CASE)	24

PIPE SEALANT

FEATURES

- RectorSeal® No. 21™ is slow drying, soft set multi-purpose sealant designed for use where black is preferred. 8 oz can with brush in the cap. Conforms to TT-S-1732.
- RectorSeal® Tru-Blu™ is fast drying, flexible set designed for high vibration environments. Teflon™ has been added to enhance thread lubrication during assembly and break out. Conforms to TT-S-1732.

*DuPont Registered Trademark

MINI T STRAINERS

FEATURES

- Heavy duty glass reinforced polypropylene
- Clear bowl made of polycarbonate
- Black bowl made of polypropylene
- Polypropylene ribbed 316 stainless steel screens
- EPDM gaskets
- Convenient color coded screens for easy mesh size identification (Refer to chart on next page)

MINI T STRAINERS W/CLEAR BOWLS

PART NO	DESCRIPTION	MAX PSI	QTY
LSTM050-30C	½" X ½" CLEAR BOWL STRAINER W/30 MESH SCREEN	100	1
LSTM050-50C	½" X ½" CLEAR BOWL STRAINER W/50 MESH SCREEN	100	1
LSTM050-80C	½" X ½" CLEAR BOWL STRAINER W/80 MESH SCREEN	100	1
LSTM075-30C	¾" X ¾" CLEAR BOWL STRAINER W/30 MESH SCREEN	100	1
LSTM075-50C	¾" X ¾" CLEAR BOWL STRAINER W/50 MESH SCREEN	100	1
LSTM075-80C	¾" X ¾" CLEAR BOWL STRAINER W/80 MESH SCREEN	100	1

MINI T STRAINERS W/BLACK BOWLS

PART NO	DESCRIPTION	MAX PSI	QTY
LSTM050-30	½" X ½" BLACK BOWL STRAINER W/30 MESH SCREEN	200	1
LSTM050-50	½" X ½" BLACK BOWL STRAINER W/50 MESH SCREEN	200	1
LSTM050-80	½" X ½" BLACK BOWL STRAINER W/80 MESH SCREEN	200	1
LSTM075-30	¾" X ¾" BLACK BOWL STRAINER W/30 MESH SCREEN	200	1
LSTM075-50	¾" X ¾" BLACK BOWL STRAINER W/50 MESH SCREEN	200	1
LSTM075-80	¾" X ¾" BLACK BOWL STRAINER W/80 MESH SCREEN	200	1

MINI T STRAINERS

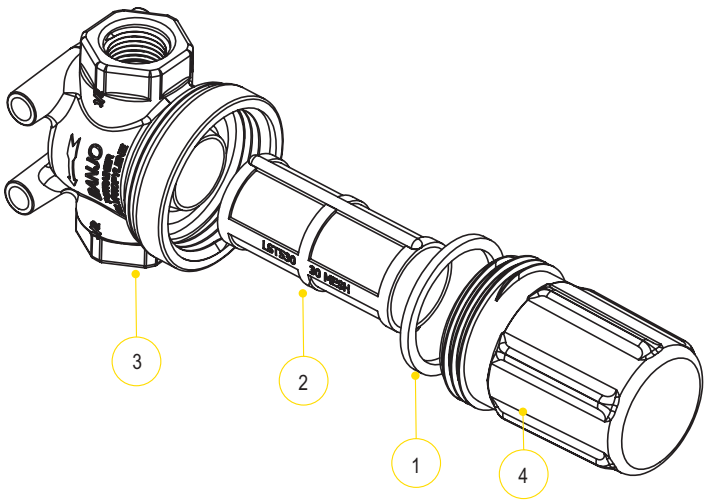

SCREENS	
MESH SIZE	RIB COLOR
30 MESH	FLAME RED
50 MESH	GENTIAN BLUE
80 MESH	ZINC YELLOW
100 MESH	TRAFFIC GREEN

REPLACEMENT PARTS

ITEM	PART NO	DESCRIPTION	QTY
1	LSTM050G	EPDM GASKET	1
2	LST530	30 MESH SCREEN	1
2	LST550	50 MESH SCREEN	1
2	LST580	80 MESH SCREEN	1
2	LST5100	100 MESH SCREEN	1
3	LSTM050H	½" STRAINER HEAD	1
3	LSTM075H	¾" STRAINER HEAD	1
4	LSTM050BC	CLEAR BOWL	1
4	LSTM050B	BLACK BOWL	1

STANDARD MESHES & DATA

	30 MESH	50 MESH	80 MESH	100 MESH
MICRONS	595	297	177	149
WIRE DIAMETER	.012	.009	.0055	.0045
OPENING	.021	.011	.007	.005
% OPEN AREA	40.8	30.3	31.4	30.3

¾"-1½" T STRAINERS

FEATURES

- Heavy duty glass reinforced polypropylene
- Clean out plug
- Polypropylene ribbed 316 stainless steel screens
- EPDM gaskets standard, FKM available
- Convenient color coded screens for easy mesh size identification (Refer to chart on next page)

¾"-1" T STRAINERS			
PART NO	DESCRIPTION	MAX PSI	QTY
LST075-16	¾" X ¾" FP T STRAINER W/16 MESH SS SCREEN	300	1
LST075-30	¾" X ¾" FP T STRAINER W/30 MESH SS SCREEN	300	1
LST075-50	¾" X ¾" FP T STRAINER W/50 MESH SS SCREEN	300	1
LST075-80	¾" X ¾" FP T STRAINER W/80 MESH SS SCREEN	300	1
LST075-100	¾" X ¾" FP T STRAINER W/100 MESH SS SCREEN	300	1
LST100-16	1" X 1" T STRAINER W/16 MESH SS SCREEN	300	1
LST100-30	1" X 1" T STRAINER W/30 MESH SS SCREEN	300	1
LST100-50	1" X 1" T STRAINER W/50 MESH SS SCREEN	300	1
LST100-80	1" X 1" T STRAINER W/80 MESH SS SCREEN	300	1
LST100-100	1" X 1" T STRAINER W/100 MESH SS SCREEN	300	1

1¼"-1½" T STRAINERS			
PART NO	DESCRIPTION	MAX PSI	QTY
LST125-16	1¼" X 1¼" FP T STRAINER W/16 MESH SS SCREEN	300	1
LST125-30	1¼" X 1¼" FP T STRAINER W/30 MESH SS SCREEN	300	1
LST125-50	1¼" X 1¼" FP T STRAINER W/50 MESH SS SCREEN	300	1
LST125-80	1¼" X 1¼" FP T STRAINER W/80 MESH SS SCREEN	300	1
LST150-30	1½" X 1½" T STRAINER W/30 MESH SS SCREEN	300	1
LST150-50	1½" X 1½" T STRAINER W/50 MESH SS SCREEN	300	1
LST150-80	1½" X 1½" T STRAINER W/80 MESH SS SCREEN	300	1
LST150-100	1½" X 1½" T STRAINER W/100 MESH SS SCREEN	300	1

¾"-1½" T STRAINERS

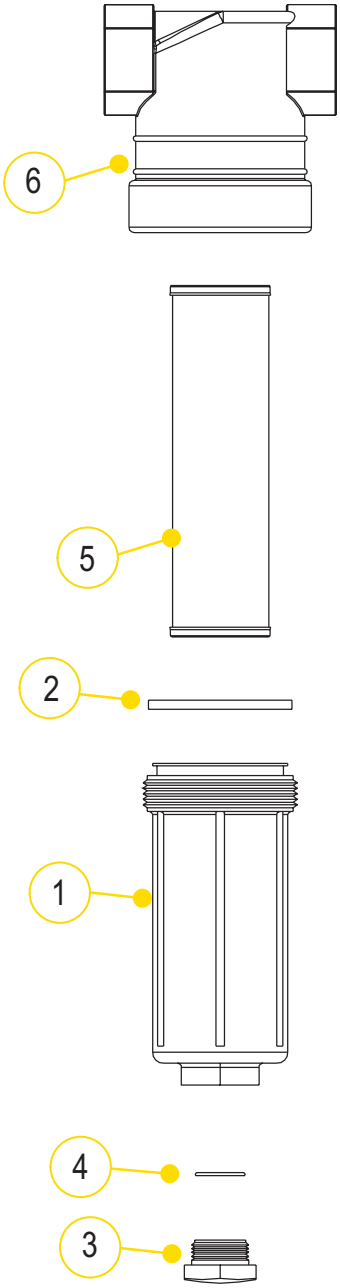

REPLACEMENT PARTS

ITEM	PART NO	DESCRIPTION	QTY
1	LST100-B	¾" & 1" BOWL (CONTAINS #1, #3, #4)	1
2	LST100-G	¾" & 1" EPDM GASKET	1
2	LST100-GV	¾" & 1" FKM GASKET	1
3	12777	½" PLUG	1
4	UV15163	EPDM O-RING FOR CLEAN OUT PLUG	1
5	LST116	16 MESH SCREEN	1
5	LST130	30 MESH SCREEN	1
5	LST150	50 MESH SCREEN	1
5	LST180	80 MESH SCREEN	1
5	LST1100	100 MESH SCREEN	1
6	LST075-H	¾" STRAINER HEAD	1
6	LST100-H	1" STRAINER HEAD	1
N/S	LST075-HB	¾" STRAINER HEAD, BOWL & GASKET	1
N/S	LST100-HB	1" STRAINER HEAD, BOWL & GASKET	1

REPLACEMENT PARTS

ITEM	PART NO	DESCRIPTION	QTY
1	LST150-B	1¼" & 1½" BOWL (CONTAINS #1, #3, #4)	1
2	LST150-G	1¼" & 1½" EPDM GASKET	1
2	LST150-GV	1¼" & 1½" FKM GASKET	1
3	LSQ200-PL	1" CLEAN OUT PLUG	1
4	LSQ200-R	EPDM O-RING FOR CLEAN OUT PLUG	1
5	LST1516	16 MESH SCREEN	1
5	LST1530	30 MESH SCREEN	1
5	LST1550	50 MESH SCREEN	1
5	LST1580	80 MESH SCREEN	1
5	LST15100	100 MESH SCREEN	1
6	N/A	1¼" STRAINER HEAD	1
N/S	LST125-HB	1¼" STRAINER HEAD, BOWL & GASKET	1
N/S	LST150-HB	1½" STRAINER HEAD, BOWL & GASKET	1

SCREENS

MESH SIZE	RIB COLOR
16 MESH	BROWN RED
30 MESH	FLAME RED
50 MESH	GENTIAN BLUE
80 MESH	ZINC YELLOW
100 MESH	TRAFFIC GREEN

STANDARD MESHES & DATA

	16 MESH	30 MESH	50 MESH	80 MESH	100 MESH
MICRONS	1190	595	297	177	149
WIRE DIAMETER	.018	.012	.009	.0055	.0045
OPENING	.044	.021	.011	.007	.005
% OPEN AREA	50.7	40.8	30.3	31.4	30.3

2" T STRAINERS POLY/STAINLESS COMBO

FEATURES

- Heavy duty glass reinforced polypropylene bowl
- 316 stainless steel head
- Clean out plug
- 316 stainless steel screens
- FKM gaskets

2" T STRAINERS POLY/SS COMBO

PART NO	DESCRIPTION	MAX PSI	QTY
LST200-10SS	2" X 2" T STRAINER (SS HEAD & POLY BODY) W/10 MESH SCREEN	300	1
LST200-50SS	2" X 2" T STRAINER (SS HEAD & POLY BODY) W/50 MESH SCREEN	300	1

LSQ STRAINERS

FEATURES

- Precision molded in glass reinforced polypropylene
- Cam lever configuration for easy access for cleaning and servicing
- ¾" plug in cam lever cap for attaching ball valve for draining or back flushing
- Poly ribbed 316 stainless steel screen
- EPDM lathe cut gasket
- For faster shipping, order in box quantities
- Convenient color coded screens for easy mesh size identification (Refer to chart on next page)

2" LSQ STRAINERS

PART NO	DESCRIPTION	MAX PSI	LOT QTY
LSQ200-06	2" X 2" LSQ STRAINER W/6 MESH SCREEN	100	6/BOX
LSQ200-20	2" X 2" LSQ STRAINER W/20 MESH SCREEN	100	6/BOX
LSQ200-30	2" X 2" LSQ STRAINER W/30 MESH SCREEN	100	6/BOX
LSQ200-50	2" X 2" LSQ STRAINER W/50 MESH SCREEN	100	6/BOX
LSQ200-80	2" X 2" LSQ STRAINER W/80 MESH SCREEN	100	6/BOX

2" T STRAINERS POLY/STAINLESS COMBO

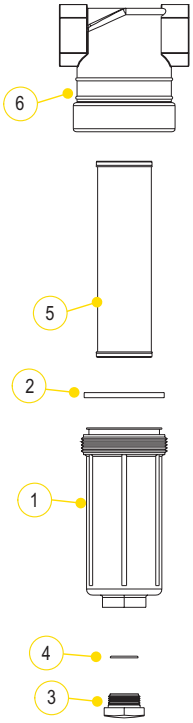

REPLACEMENT PARTS

ITEM	PART NO	DESCRIPTION	QTY
1	LST200-B	2" POLY BOWL (CONTAINS #1, #3, #4)	1
2	LST200-GV	2" FKM GASKET	1
3	LSQ200-PL	1" CLEAN OUT PLUG	1
4	LSQ200-RV	FKM O-RING FOR CLEAN OUT PLUG	1
5	LST204SS	4 MESH SS SCREEN	1
5	LST206SS	6 MESH SS SCREEN	1
5	LST208SS	8 MESH SS SCREEN	1
5	LST210SS	10 MESH SS SCREEN	1
5	LST216SS	16 MESH SS SCREEN	1
5	LST230SS	30 MESH SS SCREEN	1
5	LST250SS	50 MESH SS SCREEN	1
5	LST280SS	80 MESH SS SCREEN	1
6	LST200-HSS	2" SS HEAD	1

LSQ STRAINERS

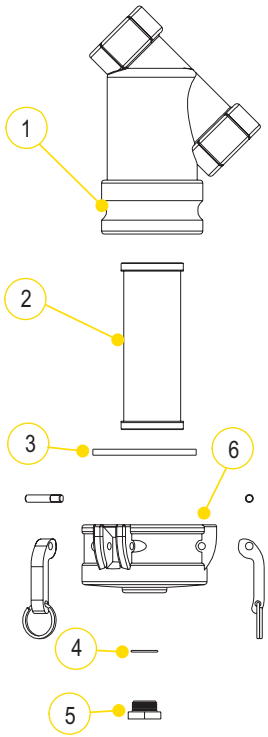

REPLACEMENT PARTS

ITEM	PART NO	DESCRIPTION	QTY
1	N/A	2" LSQ BODY	1
2	LS206	6 MESH SCREEN	1
2	LS212	12 MESH SCREEN	1
2	LS220	20 MESH SCREEN	1
2	LS230	30 MESH SCREEN	1
2	LS250	50 MESH SCREEN	1
2	LS280	80 MESH SCREEN	1
2	LS2120	120 MESH SCREEN	1
3	LSQ200-G	2" EPDM GASKET	1
4	LSQ200R1	O-RING	1
5	N/A	¾" CLEAN OUT PLUG	1
6	LSQ200-C	2" CAP (CONTAINS #3-6)	1
N/S	LSQ200-B/C	2" BODY/CAP (CONTAINS #1, 3-6)	1

SCREENS

MESH SIZE	RIB COLOR
6 MESH	WHITE
12 MESH	BLACK
20 MESH	BEIGE
30 MESH	FLAME RED
50 MESH	GENTIAN BLUE
80 MESH	ZINC YELLOW
120 MESH	BLACK

STANDARD MESHES & DATA

	6 MESH	8 MESH	10 MESH	12 MESH	16 MESH	20 MESH	30 MESH	50 MESH	80 MESH	100 MESH	120 MESH
MICRONS	3360	2380	2000	1680	1190	841	595	297	177	149	116
WIRE DIAMETER	.035	.028	.025	.023	.018	.016	.012	.009	.0055	.0045	.0037
OPENING	.132	.097	.075	.060	.044	.034	.021	.011	.007	.005	.0046
% OPEN AREA	62.7	60.2	56.3	51.8	50.7	46.2	40.8	30.3	31.4	30.3	30.5

½"-1¼" Y STRAINERS

FEATURES

- Heavy duty glass reinforced polypropylene
- Corrosion resistant
- Easy grip end cap
- Heavy duty end cap threads
- Clean out plug
- Polypropylene ribbed 316 stainless steel screens
- EPDM gaskets
- Convenient color coded screens for easy mesh size identification (Refer to chart on next page)

½"-¾" Y STRAINERS

PART NO	DESCRIPTION	MAX PSI	QTY
LS050-20	½" X ½" FP Y STRAINER W/20 MESH SS SCREEN	225	1
LS050-40	½" X ½" FP Y STRAINER W/40 MESH SS SCREEN	225	1
LS050-80	½" X ½" FP Y STRAINER W/80 MESH SS SCREEN	225	1
LS075-20	¾" X ¾" Y STRAINER W/20 MESH SS SCREEN	225	1
LS075-40	¾" X ¾" Y STRAINER W/40 MESH SS SCREEN	225	1
LS075-80	¾" X ¾" Y STRAINER W/80 MESH SS SCREEN	225	1

1"-1¼" Y STRAINERS

PART NO	DESCRIPTION	MAX PSI	QTY
LS100-20	1" X 1" Y STRAINER W/20 MESH SS SCREEN	200	1
LS100-40	1" X 1" Y STRAINER W/40 MESH SS SCREEN	200	1
LS100-80	1" X 1" Y STRAINER W/80 MESH SS SCREEN	200	1
LS125-20	1¼" X 1¼" Y STRAINER W/20 MESH SS SCREEN	200	1
LS125-40	1¼" X 1¼" Y STRAINER W/40 MESH SS SCREEN	200	1
LS125-80	1¼" X 1¼" Y STRAINER W/80 MESH SS SCREEN	200	1

½"-1¼" Y STRAINERS

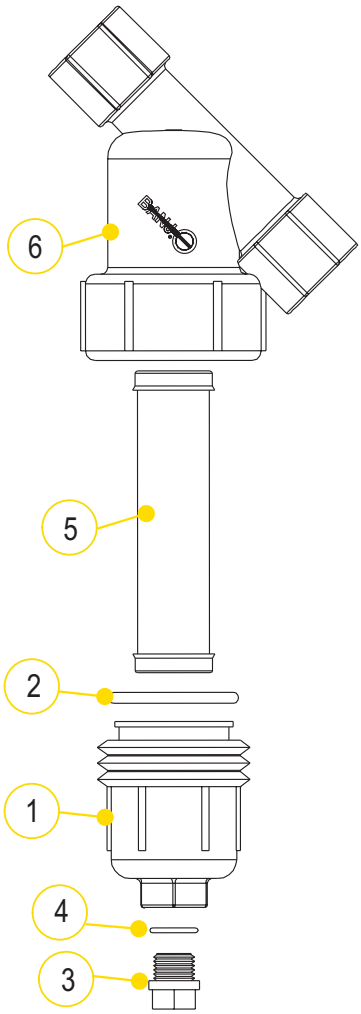

REPLACEMENT PARTS

ITEM	PART NO	DESCRIPTION	QTY
1	N/A	½"-¾" END CAP (CONTAINS #1, #3, #4)	1
2	LS075-G	½"-¾" O-RING	1
3	12723	¼" DRAIN PLUG (FITS ½"-¾")	1
4	12724	½"-¾" EPDM O-RING FOR DRAIN PLUG	1
5	LS720	½"-¾" 20 MESH SCREEN	1
5	LS740	½"-¾" 40 MESH SCREEN	1
5	LS780	½"-¾" 80 MESH SCREEN	1
6	N/A	¾" Y BODY	1
N/S	LS050B/C1	½" Y BODY, CAP & GASKET	1
N/S	LS075B/C1	¾" Y BODY, CAP & GASKET	1

SCREENS

MESH SIZE	RIB COLOR
6 MESH	WHITE
12 MESH	BLACK
20 MESH	BEIGE
30 MESH	FLAME RED
40 MESH	BROWN
50 MESH	GENTIAN BLUE
60 MESH	GENTIAN BLUE
80 MESH	ZINC YELLOW
100 MESH	TRAFFIC GREEN
120 MESH	BLACK

REPLACEMENT PARTS

ITEM	PART NO	DESCRIPTION	QTY
1	LS100-C1	1"-1¼" END CAP (CONTAINS #1, #3, #4)	1
2	LS100-G	1"-1¼" O-RING	1
2	LS100-GV	1"-1¼" FKM GASKET	1
3	12777	½" PLUG (FITS 1"-1¼")	1
4	UV15163	EPDM O-RING FOR DRAIN PLUG	1
4	UV15163V	FKM O-RING FOR DRAIN PLUG	1
5	LS120	1"-1¼" 20 MESH SCREEN	1
5	LS140	1"-1¼" 40 MESH SCREEN	1
5	LS180	1"-1¼" 80 MESH SCREEN	1
6	N/A	1" Y BODY	1
6	N/A	1¼" Y BODY	1
N/S	LS100B/C1	1" Y BODY, CAP & GASKET	1
N/S	LS125B/C1	1¼" Y BODY, CAP & GASKET	1

STANDARD MESHES & DATA

	6 MESH	8 MESH	10 MESH	12 MESH	16 MESH	20 MESH	30 MESH	50 MESH	80 MESH	100 MESH	120 MESH
MICRONS	3360	2380	2000	1680	1190	841	595	297	177	149	116
WIRE DIAMETER	.035	.028	.025	.023	.018	.016	.012	.009	.0055	.0045	.0037
OPENING	.132	.097	.075	.060	.044	.034	.021	.011	.007	.005	.0046
% OPEN AREA	62.7	60.2	56.3	51.8	50.7	46.2	40.8	30.3	31.4	30.3	30.5

1½"-2" Y STRAINERS

FEATURES

- Heavy duty glass reinforced polypropylene
- Corrosion resistant
- Easy grip end cap
- Heavy duty end cap threads
- Clean out plug
- Polypropylene ribbed 316 stainless steel screens
- EPDM gaskets
- Convenient color coded screens for easy mesh size identification (Refer to chart on next page)

1½" Y STRAINERS

PART NO	DESCRIPTION	MAX PSI	QTY
LS150-06	1½" X 1½" Y STRAINER W/6 MESH SS SCREEN	150	1
LS150-12	1½" X 1½" Y STRAINER W/12 MESH SS SCREEN	150	1
LS150-20	1½" X 1½" Y STRAINER W/20 MESH SS SCREEN	150	1
LS150-30	1½" X 1½" Y STRAINER W/30 MESH SS SCREEN	150	1
LS150-50	1½" X 1½" Y STRAINER W/50 MESH SS SCREEN	150	1
LS150-80	1½" X 1½" Y STRAINER W/80 MESH SS SCREEN	150	1
LS150-120	1½" X 1½" Y STRAINER W/120 MESH SS SCREEN	150	1

2" Y STRAINERS

PART NO	DESCRIPTION	MAX PSI	LOT QTY
LS200-06	2" X 2" Y STRAINER W/6 MESH POLY RIBBED SS SCREEN	150	1
LS200-12	2" X 2" Y STRAINER W/12 MESH POLY RIBBED SS SCREEN	150	1
LS200-20	2" X 2" Y STRAINER W/20 MESH POLY RIBBED SS SCREEN	150	1
LS200-30	2" X 2" Y STRAINER W/30 MESH POLY RIBBED SS SCREEN	150	1
LS200-50	2" X 2" Y STRAINER W/50 MESH POLY RIBBED SS SCREEN	150	5
LS200-80	2" X 2" Y STRAINER W/80 MESH POLY RIBBED SS SCREEN	150	1
LS200-100	2" X 2" Y STRAINER W/100 MESH POLY RIBBED SS SCREEN	150	1
LS200-120	2" X 2" Y STRAINER W/120 MESH POLY RIBBED SS SCREEN	150	1

1½"-2" Y STRAINERS

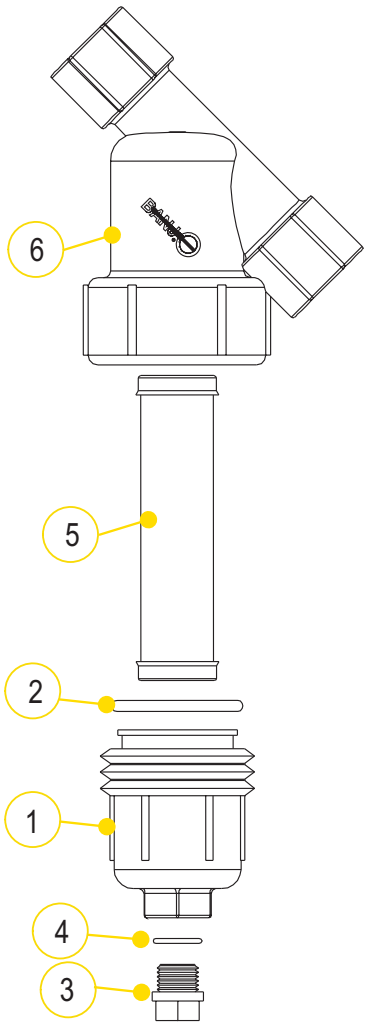

REPLACEMENT PARTS

ITEM	PART NO	DESCRIPTION	QTY
1	LS150-C	1½" - 2" END CAP (CONTAINS #1, #3, #4)	1
2	LS150-G	1½"-2" O-RING	1
2	LS150-GV	1½"-2" FKM GASKET	1
3	LSQ200-PL	1" DRAIN PLUG (FITS 1½" - 2")	1
4	LSQ200-RV	1½"-2" FKM O-RING FOR DRAIN PLUG	1
5	LS206	1½"-2" 6 MESH SCREEN	1
5	LS212	1½"-2" 12 MESH SCREEN	1
5	LS220	1½"-2" 20 MESH SCREEN	1
5	LS230	1½"-2" 30 MESH SCREEN	1
5	LS250	1½"-2" 50 MESH SCREEN	1
5	LS280	1½"-2" 80 MESH SCREEN	1
5	LS2100	1½"-2" 100 MESH SCREEN	1
5	LS2120	1½"-2" 120 MESH SCREEN	1
5	LS250P	1½"-2" 50 MESH ALL POLY SCREEN	1
6	N/A	1½" Y BODY	1
6	N/A	2" Y BODY	1
N/S	LS150B/C	1½" Y BODY, CAP & GASKET	1
N/S	LS200B/C	2" Y BODY, CAP & GASKET	1

SCREENS

MESH SIZE	RIB COLOR
6 MESH	WHITE
12 MESH	BLACK
20 MESH	BEIGE
30 MESH	FLAME RED
40 MESH	BROWN
50 MESH	GENTIAN BLUE
80 MESH	ZINC YELLOW
100 MESH	TRAFFIC GREEN
120 MESH	BLACK

STANDARD MESHES & DATA

	6 MESH	8 MESH	12 MESH	20 MESH	30 MESH	50 MESH	80 MESH	100 MESH	120 MESH
MICRONS	3360	2380	1680	841	595	297	177	149	116
WIRE DIAMETER	.035	.028	.023	.016	.012	.009	.0055	.0045	.0037
OPENING	.132	.097	.060	.034	.021	.011	.007	.005	.0046
% OPEN AREA	62.7	60.2	51.8	46.2	40.8	30.3	31.4	30.3	30.5

3" Y STRAINERS

FEATURES

- Heavy duty glass reinforced polypropylene
- Corrosion resistant
- High volume
- Heavy duty end cap threads
- ½" clean out plug
- 304 stainless steel screens
- EPDM gaskets
- Warning: to be used on suction side or non-pressure side in all applications

3" Y STRAINERS			
PART NO	DESCRIPTION	MAX PSI	LOT QTY
LSM300-04	3" X 3" Y STRAINER W/4 MESH SCREEN	75	2/BOX
LSM300-08	3" X 3" Y STRAINER W/8 MESH SCREEN	75	2/BOX
LSM300-12	3" X 3" Y STRAINER W/12 MESH SCREEN	75	2/BOX
LSM300-20	3" X 3" Y STRAINER W/20 MESH SCREEN	75	2/BOX
LSM300-50	3" X 3" Y STRAINER W/50 MESH SCREEN	75	2/BOX

3" Y STAINLESS STEEL STRAINERS

FEATURES

- Heavy duty stainless steel
- Corrosion resistant
- High volume
- Heavy duty end cap threads
- ½" clean out plug
- 304 stainless steel screens
- EPDM gaskets standard, FKM available
- Maximum operating pressure 225 psi
- Warning: to be used on suction side or non-pressure side in all applications

3" Y STRAINERS		
PART NO	DESCRIPTION	QTY
LSS300-BC	3" SS BODY, CAP & GASKETS	1
LSS300-S	EPDM SCREEN SEAL	1
LSS300-SV	FKM SCREEN SEAL	1
LSS300-G	EPDM CAP GASKET	1
LSS300-GV	FKM CAP GASKET	1

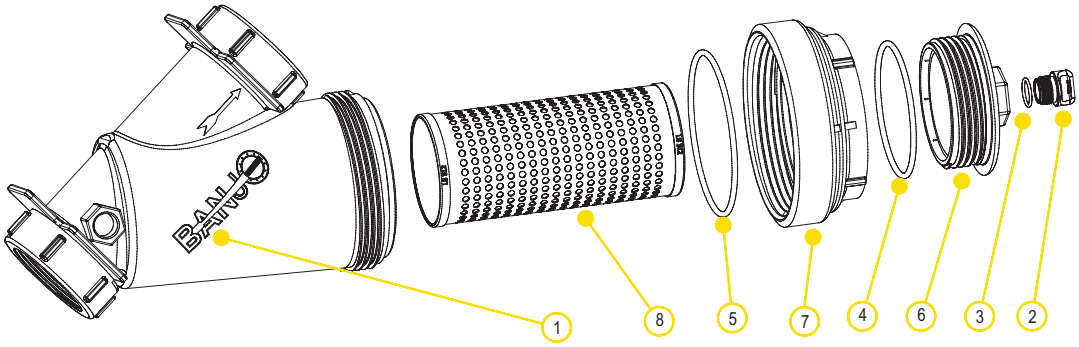

3" Y STRAINERS

- 304 stainless steel screens

REPLACEMENT PARTS			
ITEM	PART NO	DESCRIPTION	QTY
1	MLS300B1	3" BODY	1
2	13777	¾" PLUG	1
3	13778	O-RING	1
4	MLS300ECG	EPDM END CAP GASKET	1
4	MLS300ECGV	FKM CAP GASKET	1
5	MLS300G	EPDM CAP GASKET	1
6	LS300EC	END CAP ONLY (PLUG SOLD SEPARATELY)	1
7	MLS300CAP	3" CAP	1
8	LS304	4 MESH SCREEN	1
8	LS308	8 MESH SCREEN	1
8	LS312	12 MESH SCREEN	1
8	LS320	20 MESH SCREEN	1
8	LS350	50 MESH SCREEN	1

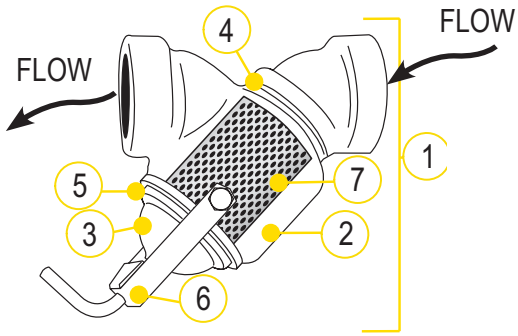

3" Y STAINLESS STEEL STRAINERS

- 304 stainless steel screens

REPLACEMENT PARTS			
ITEM	PART NO	DESCRIPTION	QTY
1	LSS300-BC	3" SS BODY, CAP & GASKETS	1
2	N/A	3" SS BODY	1
3	N/A	3" SS CAP	1
4	LSS300-S	EPDM SCREEN SEAL	1
4	LSS300-SV	FKM SCREEN SEAL	1
5	LSS300-G	EPDM CAP GASKET	1
5	LSS300-GV	FKM CAP GASKET	1
6	LSS300-H	HANDLE/CLAMP ASSEMBLY	1
7	LSS306	6 MESH SS SCREEN	1
7	LSS308	8 MESH SS SCREEN	1
7	LSS312	12 MESH SS SCREEN	1
7	LSS320	20 MESH SS SCREEN	1
7	LSS330	30 MESH SS SCREEN	1
7	LSS350	50 MESH SS SCREEN	1

CENTRIFUGAL PUMPS

PUMP ACCESSORIES PAGES 95	ROLL CAGES SUCTION BASKET STRAINERS BASE PLATES
2" POLY PUMPS PAGES 96 - 109	GAS ENGINE PUMPS PUMP ONLY/ BEARING PEDESTAL WET SEAL WITH GAS ENGINE ELECTRIC MOTOR DRIVEN HYDRAULIC MOTOR DRIVEN MANIFOLD
3" POLY PUMPS PAGES 110- 119	GAS ENGINE PUMPS PUMP ONLY/ BEARING PEDESTAL MANIFOLD HYDRAULIC MOTOR DRIVEN WET SEAL WITH GAS ENGINE
1½" & 2" CAST IRON PUMPS PAGES 120 - 127	GAS ENGINE PUMPS PUMP ONLY/ BEARING PEDESTAL WET SEALS ELECTRIC MOTOR DRIVEN HYDRAULIC MOTOR DRIVEN
2" CAST IRON 222 SERIES PUMPS PAGES 128- 131	GAS ENGINE PUMPS PUMP ONLY/ BEARING PEDESTAL HYDRAULIC MOTOR DRIVEN ELECTRIC MOTOR DRIVEN MANIFOLD WET SEAL
3" CAST IRON PUMPS PAGES 132 - 137	GAS ENGINE PUMPS PUMP ONLY/ BEARING PEDESTAL WET SEALS HYDRAULIC MOTOR DRIVEN
3" CAST IRON 333 SERIES PUMPS PAGES 138 - 139	GAS ENGINE PUMPS PUMP ONLY/ BEARING PEDESTAL ELECTRIC MOTOR DRIVEN
3" CAST IRON MANIFOLD WET SEAL M332 SERIES PUMPS PAGES 140 - 143	GAS ENGINE PUMPS PUMP ONLY/ BEARING PEDESTAL ELECTRIC MOTOR DRIVEN HYDRAULIC MOTOR DRIVEN
4" CAST IRON 444 SERIES PUMPS PAGES 144 - 145	GAS ENGINE PUMPS PUMP ONLY
2" & 3" STAINLESS STEEL PUMPS PAGES 146- 153	GAS ENGINE PUMPS PUMP ONLY/ BEARING PEDESTAL ELECTRIC MOTOR DRIVEN HYDRAULIC MOTOR DRIVEN

BANJ® Liquid Handling Products

SUCTION BASKET STRAINERS

FEATURES

- Made of polyethylene
- Prevents plugging and damage to pump while suctioning from streams or ponds.

SUCTION BASKET STRAINERS		
PART NO	DESCRIPTION	QTY
200SBS	2" FEMALE THREAD POLY BASKET	1
300SBS	3" FEMALE THREAD POLY BASKET	1

BASE PLATE ASSEMBLY

FEATURES

- Universal fit for 1½", 2" and 3" polypropylene or cast iron pumps

BASE PLATE ASSEMBLY		
PART NO	DESCRIPTION	QTY
18700	BASE PLATE ASSEMBLY INCLUDES PLATE, COUPLING GUARD, BOLT BAG AND SHIMS	1

2" POLY PUMPS

FEATURES

- Precision molded construction
- Lightweight
- Corrosion resistant
- Superior design
- Low maintenance
- EPDM standard, FKM available
- Engine warranty service available at authorized Briggs & Stratton® and Honda® dealers

POWERED BY BRIGGS & STRATTON

2" POLY PUMPS W/GAS ENGINES			
PART NO	DESCRIPTION	HP	QTY
200PH-5	2" POLY PUMP W/5.5 HP HONDA® ENGINE	5.5	1
200PH-5E	2" POLY PUMP W/5.5 HP HONDA® ENGINE W/ ELECTRIC START	5.5	1
200PH-5V	2" POLY PUMP W/5.5 HP HONDA® ENGINE W/FKM & 316 SS SEAL	5.5	1
200PH6	2" POLY PUMP W/6.5 HP HONDA® ENGINE	6.5	1
200P6PRO	2" POLY PUMP W/6.5 HP BRIGGS & STRATTON® ENGINE PRO SERIES	6.5	1
200P6PROE	2" POLY PUMP W/6.5 HP BRIGGS & STRATTON® ENGINE PRO SERIES W/ELECTRIC START	6.5	1
200P6PROV	2" POLY PUMP W/6.5 HP BRIGGS & STRATTON® ENGINE PRO SERIES W/FKM & 316 SS SEAL	6.5	1

WARNING! DO NOT RUN PUMP DRY, RESTRICT OR REDUCE PORT SIZES OR DEAD HEAD PUMP

2" POLY PUMP BEARING PEDESTALS			
PART NO	DESCRIPTION	HP	QTY
200PB	2" POLY BEARING PEDESTAL W/ ¾" SHAFT & 3 VANE IMPELLER	N/A	1
205PB	2" POLY BEARING PEDESTAL W/ ¾" SHAFT & 5 VANE IMPELLER	N/A	1
205PB-V	2" POLY BEARING PEDESTAL W/ ¾" SHAFT & 5 VANE IMPELLER W/FKM & 316 SS SEAL	N/A	1

WARNING! DO NOT USE WITH FLAMMABLE LIQUIDS

2" POLY PUMP ONLYS			
PART NO	DESCRIPTION	HP	QTY
200PO	2" POLY PUMP ONLY* W/ 3 & 5 VANE IMPELLER	N/A	1
200PO-V	2" POLY PUMP ONLY* W/ 3 & 5 VANE IMPELLER W/FKM & 316 SS SEAL	N/A	1

Note: Requires ¾" shaft on motor

2" POLY PUMPS

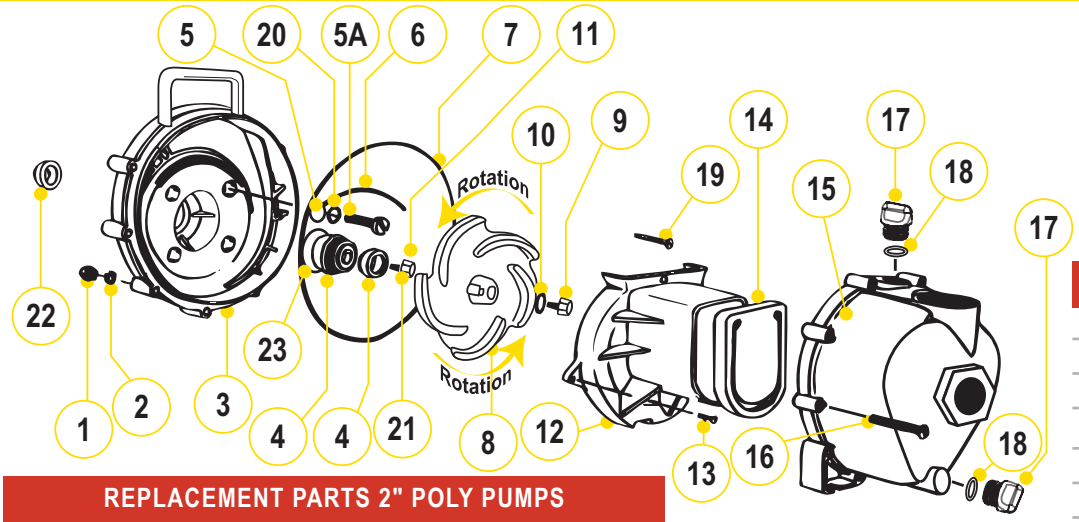

KITS 2" POLY PUMPS

PART NO	REPAIR KIT NO	SEAL KIT NO
200PH-5	12000A	12999A
200PH-5E	12000A	12999A
200PH-5V	12000AV	12999AV
200PH6	12000A	12999A
200P6PRO	12000A	12999A
200P6PROE	12000A	12999A
200P6PROV	12000AV	12999AV
200PB	12003A	12999A
205PB	12000A	12999A
205PB-V	12000AV	12999AV
200PO	12003A	12999A
200PO-V	12003AV	12999AV

REPLACEMENT PARTS 2" POLY PUMPS

ITEM	PART NO	DESCRIPTION	QTY
1	V07019	SS BODY NUTS	10
2	V07018	SS LOCK WASHERS	10
3	12703A	POLY PUMP REAR BRACKET	1
4	12713	SEAL ASSEMBLY	1
4	12713V	FKM SEAL ASSEMBLY	1
5	12717	O-RING FOR SCREW HEAD	4
5	12717V	FKM O-RING FOR SCREW HEAD	4
5A	12715A	SS BRACKET SCREWS	4
6	12754	O-RING SEGMENT	1
6	12754V	FKM O-RING SEGMENT	1
7	12719A	BODY O-RING	1
7	12719AV	FKM BODY O-RING	1
8	12772	5 VANE IMPELLER	1
8	12771A	3 VANE IMPELLER	1
9	12765A	SS IMPELLER BOLT	1
10	A204	O-RING	1
10	A204V	FKM O-RING	1
11	12775A	IMPELLER HEX NUT	1
12	12702A	POLY PUMP VOLUTE	1
13	12725	SS VOLUTE SCREWS	1
14	12705	POLY PUMP CHECK VALVE	1
14	12705V	FKM CHECK VALVE	1
15	12712A	BODY ASSEMBLY	1
16	12720	SS BODY SCREWS	10
17	12777	½" PLUG	2
18	UV15163	PRIME/DRAIN PLUG O-RING	2
18	UV15163V	FKM PRIME/DRAIN PLUG O-RING	2
19	12900	SS UPPER VOLUTE SCREW	1
20	12901	SS REAR BRACKET WASHER	4
21	12902A	IMPELLER KEY	1
22	12716	POLY PUMP SLINGER	1
23	12710	O-RING FOR SEAL ASSEMBLY	1
23	12710V	FKM O-RING FOR SEAL ASSEMBLY	1
N/S	12882A	BEARING PEDESTAL	1
N/S	12099	7/16"-14 X 1.25" HHCS	1
KIT	12000A	POLY PUMP EPDM REPAIR KIT (ITEMS 4-8, 10, 14, 18, 21-23 & 12099)	1
KIT	12000AV	POLY PUMP FKM REPAIR KIT (ITEMS 4-8, 10, 14, 18, 21-23 & 12099)	1
KIT	12999A	PUMP SEAL/O-RING KIT (ITEMS 5-7, 10, 18, 22, 23 & 12099)	1
KIT	12999AV	FKM PUMP SEAL/O-RING KIT (ITEMS 5-7, 10, 18, 22, 23 & 12099)	1

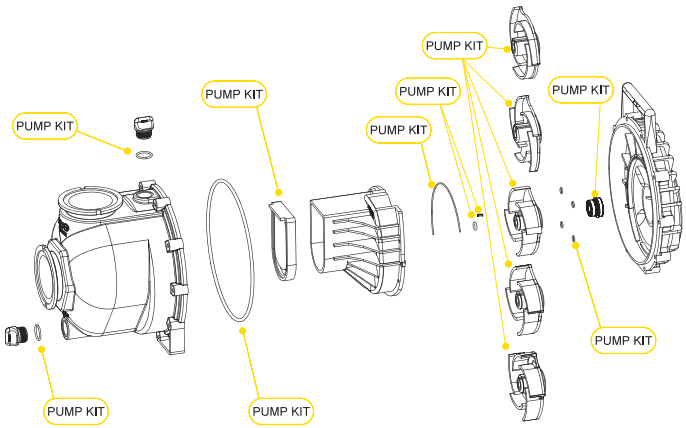

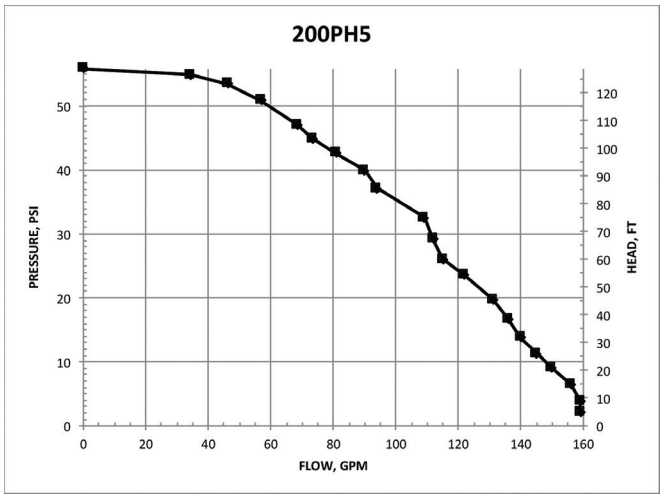

2" POLY WET SEAL PUMPS

FEATURES

- Run dry capability
- Double seal contained in ethylene glycol reservoir. Carbon ceramic seal faces with stainless steel cup and spring with EPDM rubber.
- Pump end separated from engine
- V-shaped for quicker priming
- Engine warranty service available at authorized Briggs & Stratton® and Honda® dealers

WARNING! DO NOT USE WITH FLAMMABLE LIQUIDS

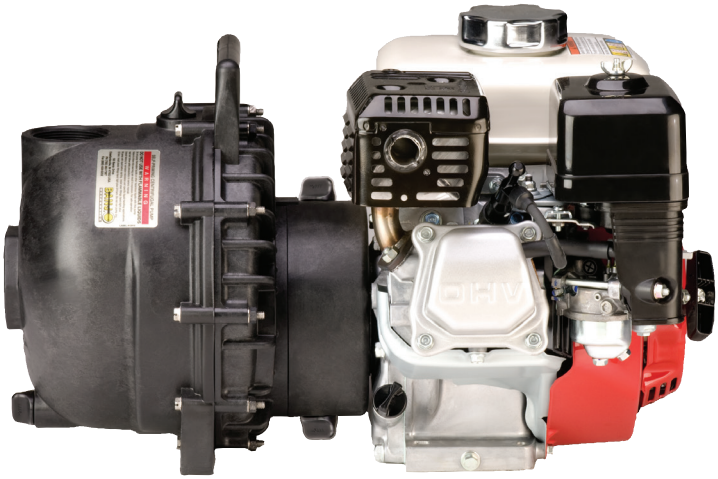

2" POLY WET SEAL PUMPS W/GAS ENGINES

PART NO	DESCRIPTION	HP	QTY
200PH5W	2" POLY WET SEAL PUMP W/5.5 HP HONDA® ENGINE	5.5	1

2" POLY WET SEAL PUMP ONLY

PART NO	DESCRIPTION	HP	QTY
205POW	2" POLY WET SEAL PUMP ONLY, 5 VANE IMPELLER WITH EPDM SEALS	N/A	1

2" POLY WET SEAL PUMPS

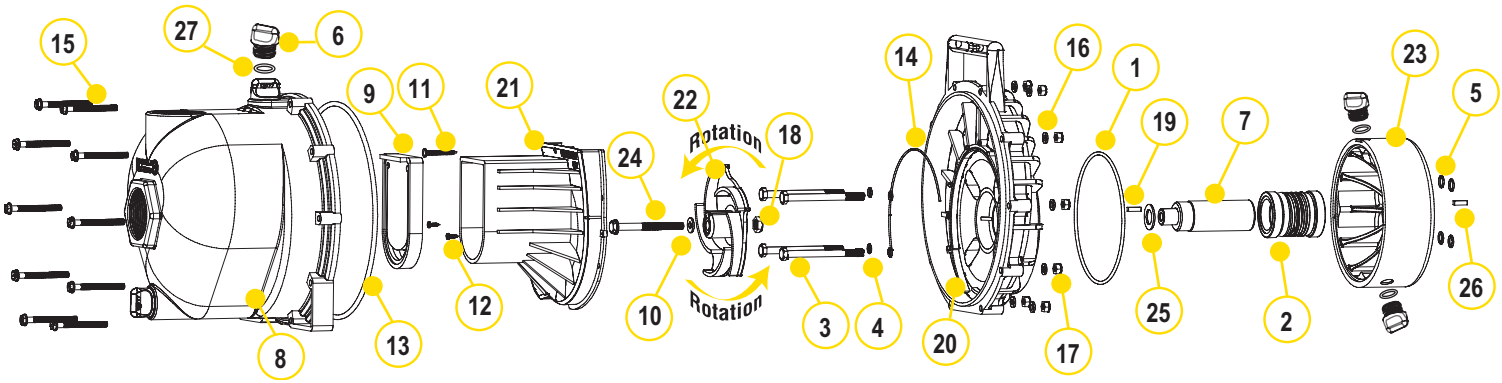

REPLACEMENT PARTS 2" POLY PUMPS			
ITEM	PART NO	DESCRIPTION	QTY
1	13719	O-RING	1
2	15035E	EPDM MECHANICAL SEAL ASSEMBLY	1
3	13034	5⁄16" -24 X 3 3⁄4" HHCS	4
4	12717	O-RING FOR BRACKET SCREW	4
5	12709	O-RING	4
6	12777	1⁄2" PLUG	4
7	12155	ADAPTER SHAFT	1
8	12712A	BODY ASSEMBLY	1
9	12705	CHECK VALVE	1
10	A204	IMPELLER BOLT GASKET	1
11	12900	#10 X 1 1⁄2" PPH SMS	1
12	12725	#6 X 1⁄2" PPH SMS	2
13	12719A	BODY O-RING	1
14	12754	O-RING SEGMENT	1
15	12720	1⁄4" - 20 X 2 1⁄2" SL IND HWHS	10
16	V07018	1⁄4" LOCK WASHER	10
17	V07019	1⁄4" - 20 HEX NUT	10
18	12775A	7⁄16" - 14 HEX NUT	1
19	12902A	3⁄16" SQ. X 5⁄8" KEY	2
20	12707W	WET SEAL REAR BRACKET	1
21	12702A	VOLUTE	1
22	12772	5 VANE IMPELLER	1
23	12202W	WET SEAL RESERVOIR	1
24	12766	5⁄16" - 24 X 3 1⁄4" HFS	1
25	CV10175	GASKET	1
26	12902A	1⁄4" SQ. 3⁄4" KEY STOCK	1
27	UV15163	O-RING FOR DRAIN PLUG	4

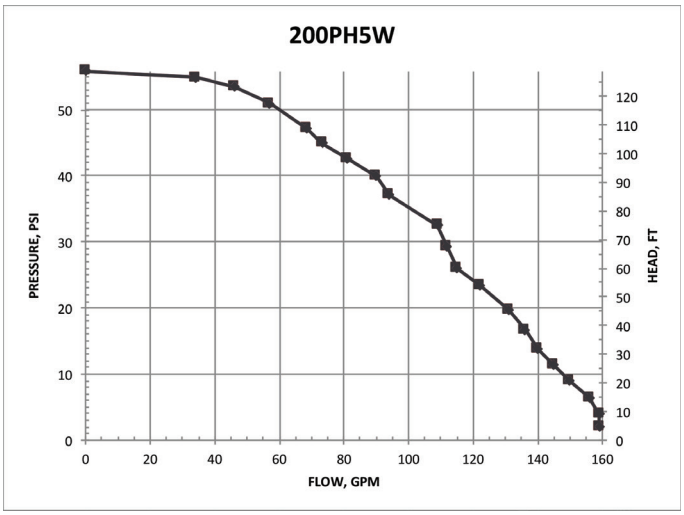

2" POLY PUMPS WITH ELECTRIC MOTORS

FEATURES

- Additional drive unit protection with added 1" spacer for ultimate protection
- The "Super Slinger" included for even more drive unit protection (not shown)

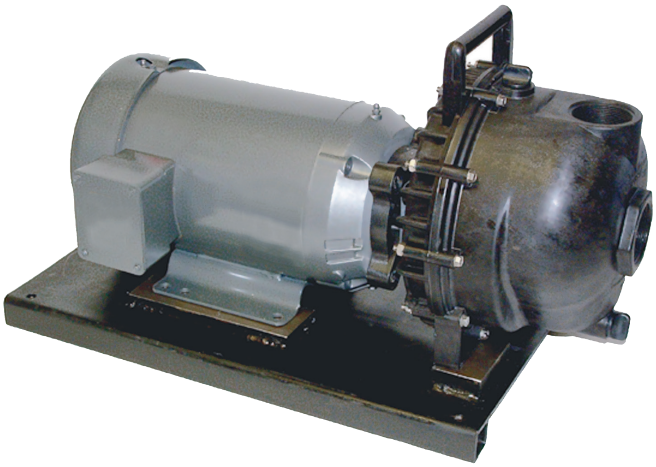

2" POLY PUMPS W/ELECTRIC MOTORS			
PART NO	DESCRIPTION	HP	QTY
234PPE5	2" POLY PUMP W/5 HP THREE PHASE ELECTRIC MOTOR W/ EPDM ELASTOMERS	5	1
234PPE5V	2" POLY PUMP W/5 HP THREE PHASE ELECTRIC MOTOR W/FKM ELASTOMERS	5	1
234PPE51	2" POLY PUMP W/5 HP SINGLE PHASE ELECTRIC MOTOR W/ EPDM ELASTOMERS	5	1
234PPE51V	2" POLY PUMP W/5 HP SINGLE PHASE ELECTRIC MOTOR W/FKM ELASTOMERS	5	1

WARNING! DO NOT RUN PUMP DRY, RESTRICT OR REDUCE PORT SIZES OR DEAD HEAD PUMP

WARNING! DO NOT USE WITH FLAMMABLE LIQUIDS

2" POLY PUMPS WITH ELECTRIC MOTORS

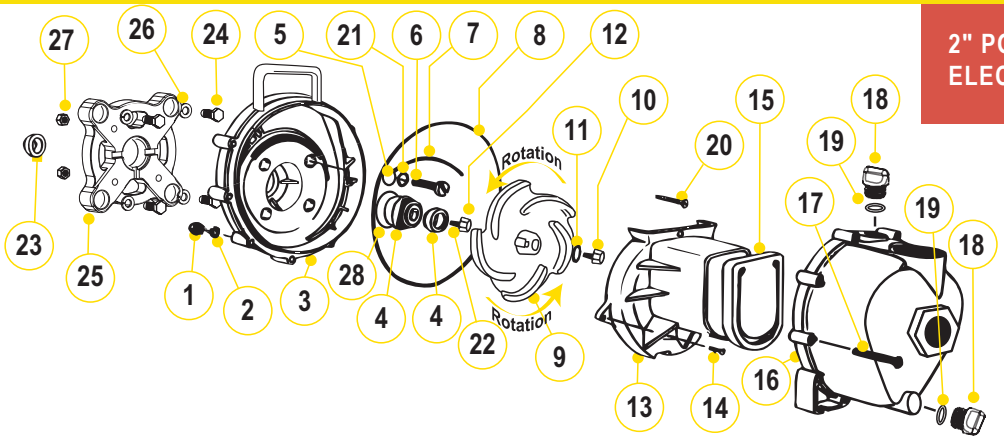

REPLACEMENT PARTS 2" POLY PUMPS

ITEM	PART NO	DESCRIPTION	QTY
1	V07019	SS BODY NUTS	10
2	V07018	SS LOCK WASHERS	10
3	12703A	POLY PUMP REAR BRACKET	1
4	12713	SEAL ASSEMBLY EPDM	1
4	12713V	SEAL ASSEMBLY FKM	1
5	12717	SCREW HEADS O-RING EPDM	4
5	12717V	SCREW HEADS O-RING FKM	4
6	N/A	SS BRACKET SCREWS	4
7	12754	O-RING SEGMENT EPDM	1
7	12754V	O-RING SEGMENT FKM	1
8	12719A	BODY O-RING EPDM	1
8	12719AV	BODY O-RING FKM	1
9	12772	5 VANE IMPELLER	1
10	12765A	SS IMPELLER BOLT	1
11	A204	O-RING	1
11	A204V	FKM O-RING	1
12	12775A	IMPELLER HEX NUT	1
13	12702A	POLY PUMP VOLUTE	1
14	12725	SS VOLUTE SCREWS	2
15	12705	POLY PUMP CHECK VALVE EPDM	1
15	12705V	POLY PUMP CHECK VALVE FKM	1
16	12712A	BODY ASSEMBLY EPDM	1
16	N/A	BODY ASSEMBLY FKM	1
17	12720	SS BODY SCREWS	10
18	12777	½" PLUG	2
19	UV15163	PRIME/DRAIN PLUG O-RING	2
19	UV15163V	FKM PRIME/DRAIN PLUG O-RING	2
20	12900	SS UPPER VOLUTE SCREW	1
21	12901	SS REAR BRACKET WASHER	4
22	12902A	IMPELLER KEY	1
23	12716	PUMP SLINGER	1
24	17704	⅜"-16 X 1.25" HHCS	8
25	12046	56C FRAME ADAPTER	1
26	V20018	LOCK WASHER FOR 56C FRAME ADAPTER	8
27	V10119	NUT FOR 56C FRAME ADAPTER	4
28	12710	O-RING FOR SEAL ASSEMBLY	1
28	12710V	FKM O-RING FOR SEAL ASSEMBLY	1

REPLACEMENT PARTS 2" POLY PUMPS

ITEM	PART NO	DESCRIPTION	QTY
N/S	17701	BASE PLATE	1
N/S	12099	7/16"-14 X 1.25" HHCS	1
N/S	12052	56C FRAME ADAPTER SHAFT FOR 200PEO	1
KIT	12756	56C FRAME ADAPTER KIT (ITEMS 6, 22, 24-27, 12052, 12053, 15751, 15752)	1
KIT	12000A	POLY PUMP EPDM REPAIR KIT (ITEMS 4, 5, 7, 8, 9, 11, 15, 19, 22- 23 & 12099)	1
KIT	12000AV	POLY PUMP FKM REPAIR KIT (ITEMS 4, 5, 7, 8, 9, 11, 15, 19, 22-23 & 12099)	1
KIT	12999A	PUMP SEAL/O-RING KIT (ITEMS 4, 5, 7, 8, 11, 19, 23)	1
KIT	12999AV	FKM PUMP SEAL/O-RING KIT (ITEMS 4, 5, 7, 8, 11, 19, 23)	1

KITS 2" POLY PUMPS

PART NO	REPAIR KIT NO	SEAL KIT NO	FRAME ADAPTER KIT
234PPE5	12000A	12999A	12756
234PPE5V	12000AV	12999AV	12756
234PPE51	12000A	12999A	12756
234PPE51V	12000AV	12999AV	12756

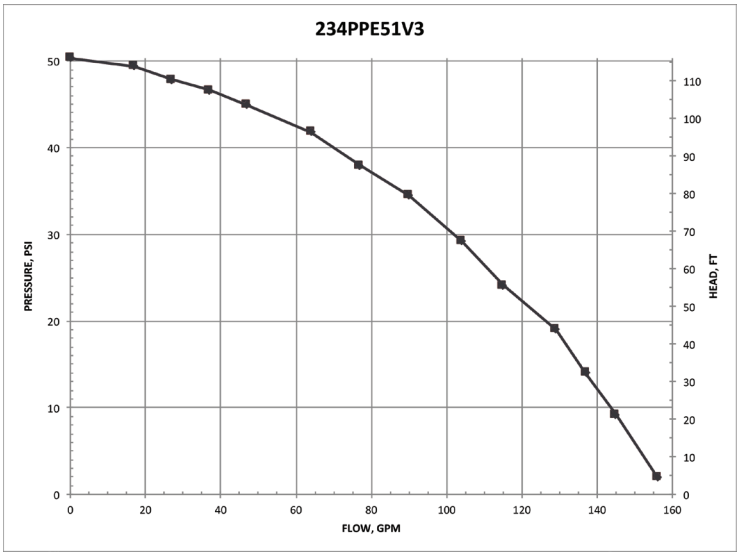

2" POLY PUMPS WITH HYDRAULIC MOTORS

FEATURES

- Precision molded construction
- Lightweight
- Corrosion resistant
- Low maintenance
- Hydraulic fluid capacity is minimum 6 gallons and maximum 10 gallons
- Open or closed system
- 3600 R.P.M.
- Recommendation to use the motor spool control valve or a suitable equivalent. The lack of such a valve in this circuit may cause failure to the hydraulic motor.

2" POLY PUMPS W/HYDRAULIC MOTORS

PART NO	DESCRIPTION	HP	QTY
200PHA	2" POLY PUMP WITHOUT HYDRAULIC MOTOR	N/A	1
200PHY	2" POLY PUMP W/12 HP HYDRAULIC MOTOR	12.0	1
200PHYW	2" POLY WET SEAL PUMP W/12 HP HYDRAULIC MOTOR	12.0	1

WARNING! DO NOT RUN PUMP DRY, RESTRICT OR REDUCE PORT SIZES OR DEAD HEAD PUMP

WARNING! DO NOT USE WITH FLAMMABLE LIQUIDS

SPOOL VALVE ASSEMBLY DIAGRAM

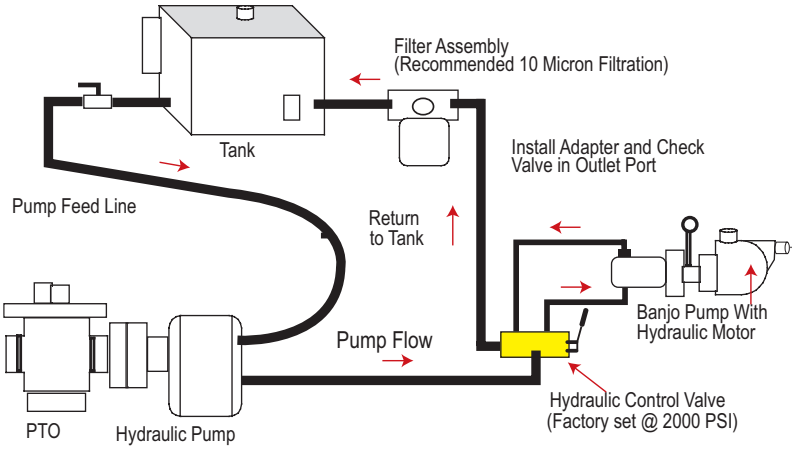

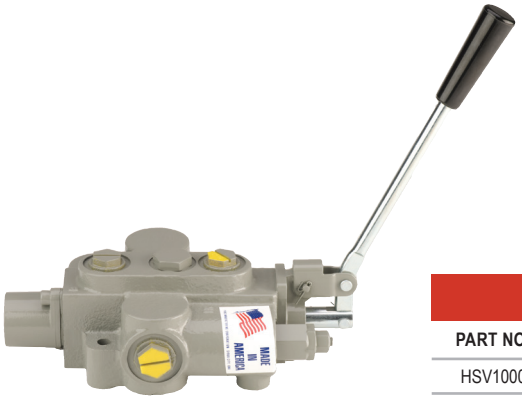

HYDRAULIC MOTOR SPOOL VALVE

PART NO	DESCRIPTION	HP	QTY
HSV1000	HYDRAULIC MOTOR SPOOL VALVE	N/A	1

2" POLY PUMPS WITH HYDRAULIC MOTORS

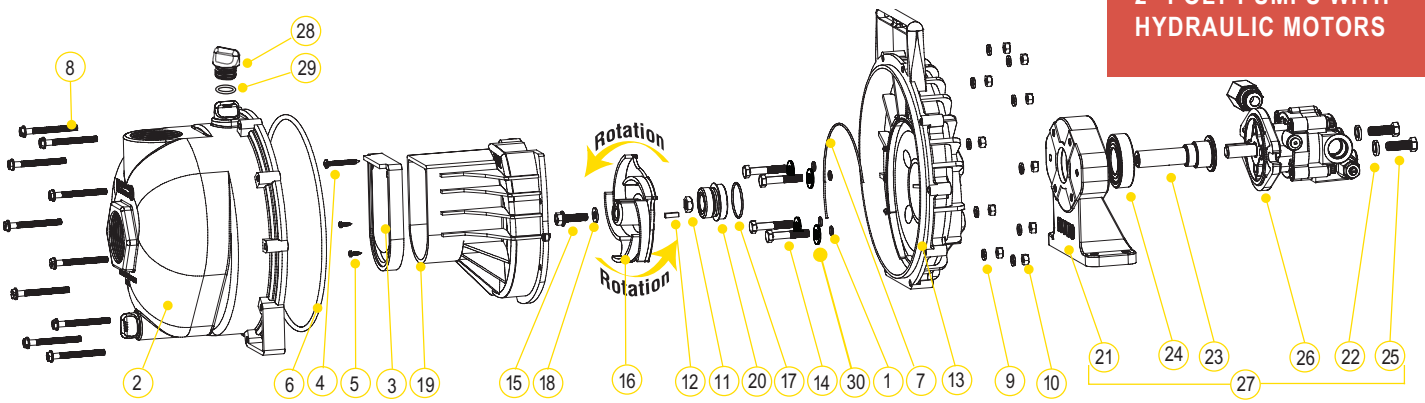

REPLACEMENT PARTS 2" POLY PUMPS

ITEM	PART NO	DESCRIPTION	QTY
1	12717	O-RING FOR SCREW HEADS	4
2	12712A	BODY ASSEMBLY	1
3	12705	CHECK VALVE	1
4	12900	SS UPPER VOLUTE SCREW	1
5	12725	SS VOLUTE SCREWS	2
6	12719A	BODY O-RING	1
7	12754	O-RING SEGMENT	1
8	12720	SS BODY SCREWS	10
9	V07018	SS LOCK WASHERS	10
10	V07019	SS BODY NUTS	10
11	12775A	IMPELLER HEX NUT	1
12	12902A	IMPELLER KEY	1
13	12703A	POLY PUMP REAR BRACKET	1
14	12715A	5/16"-24 X 1.75" HHCS	4
15	12765A	SS IMPELLER BOLT	1
16	12772	5 VANE IMPELLER	1
17	12710	O-RING FOR SEAL ASSEMBLY	1
18	A204	O-RING	1
19	12702A	POLY PUMP VOLUTE	1
20	12713	MECHANICAL SEAL ASSEMBLY	1
21	12049E	HYDRAULIC PEDESTAL HOUSING	1
22	V20018	3/8" LOCK WASHER	2
23	12055E	ADAPTER SHAFT	1
24	17056E	BEARING	1
25	18010SS	3/8"-16 X 1.25" HHCS	2
26	HY1013	HYDRAULIC MOTOR	1
27	12600B	COMPLETE HYDRAULIC ASSEMBLY	1
28	12777	1/2" PLUG	2
29	UV15163	O-RING FOR PLUG	2
30	12901	WASHER (200PHA & 200PHY)	4
N/S	HY1003	HYDRAULIC MOTOR SEAL KIT	1
KIT	12000A	POLY PUMP EPDM REPAIR KIT (ITEMS 1, 3, 6, 7, 12, 16-18, 20, 12099)	1
KIT	12999A	PUMP SEAL/O-RING KIT (ITEMS 1, 6, 7, 17, 20, 29, 12099)	1

KITS 2" POLY PUMPS

PART NO	EPDM REPAIR KIT NO	EPDM SEAL KIT NO	HYDRAULIC MOTOR SEAL KIT
200PHA	12000A	12999A	N/A
200PHY	12000A	12999A	HY1003

HYDRAULIC MOTOR DATA

U.S. GALLONS/REV.	0.0025
CUBIC INCHES/REV.	0.580
LITERS/REV.	0.0097
MAX HYDRAULIC PRESSURE	2000 PSI
MIN HYDRAULIC PRESSURE	200 PSI
INLET PORT	SAE 10 (7/8-14 UNF-2B)
OUTLET PORT	SAE 10 (7/8-14 UNF-2B)
MINIMUM GPM REQUIRED	6 GPM 2400 RPM
MAXIMUM GPM REQUIRED	10 GPM 4000 RPM
IDEAL GPM REQUIRED	9 GPM 3600 RPM
CONNECTION INFORMATION	
INLET	"A" PORT
OUTLET	"B" PORT
SUPPLIED CHECK VALVE IS TO ENSURE PROPER ROTATION OF THE BANJO PUMP. PLACE CHECK VALVE IN OUTLET PORT (MARKED "B") FOR PROPER RIGHT HAND ROTATION.	
SPOOL VALVE INFORMATION	
REQUIRED OUTLET FLOW	MIN 6 GPM / MAX 10 GPM
REQUIRED SYSTEM PRESSURE	MIN 600 PSI / MAX 3000 PSI

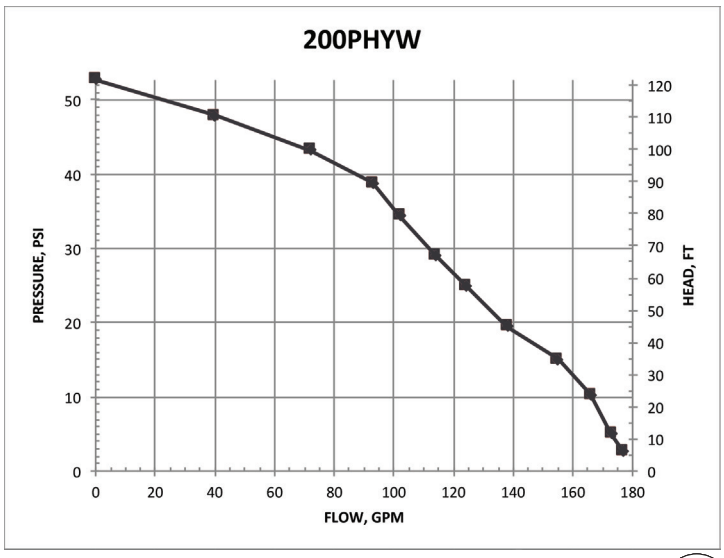

2" POLY MANIFOLD PUMPS WITH GAS ENGINES

FEATURES

- Precision molded construction
- Lightweight
- Corrosion resistant
- Low maintenance
- See pages 39-45 on manifold fittings for easy plumbing.

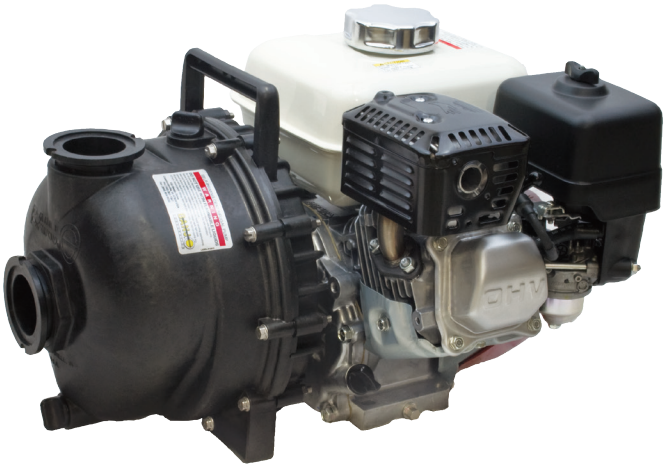

2" POLY MANIFOLD PUMPS W/GAS ENGINES			
PART NO	DESCRIPTION	HP	QTY
M220PH5	2" POLY MANIFOLD PUMP W/5.5 HP HONDA® ENGINE	5.5	1
M220PH6	2" FP MANIFOLD PUMP W/6.5 HP HONDA® ENGINE	6.5	1
M220P6PRO	2" FP MANIFOLD PUMP W/6.5 HP BRIGGS & STRATTON® PRO SERIES ENGINE	6.5	1

WARNING! DO NOT RUN PUMP DRY, RESTRICT OR REDUCE PORT SIZES OR DEAD HEAD PUMP

WARNING! DO NOT USE WITH FLAMMABLE LIQUIDS

2" POLY MANIFOLD PUMP ONLY			
PART NO	DESCRIPTION	HP	QTY
M225PO	2" POLY MANIFOLD PUMP ONLY W/ ¾" SHAFT & 5 VANE IMPELLER	N/A	1

BANJO® Liquid Handling Products

2" POLY MANIFOLD PUMPS WITH GAS ENGINES

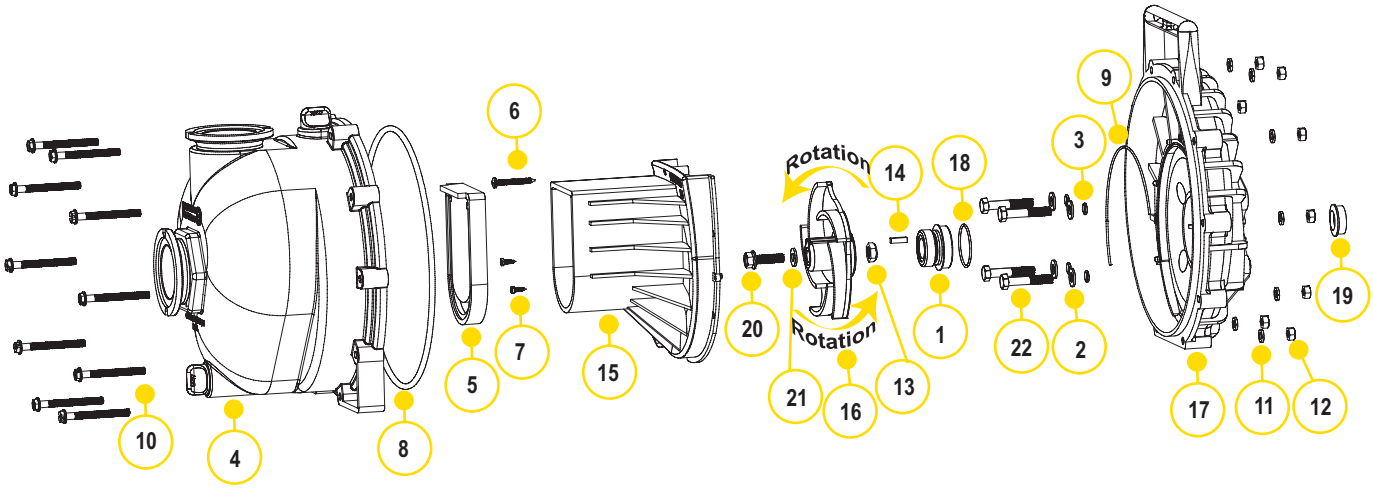

REPLACEMENT PARTS 2" POLY PUMPS

ITEM	PART NO	DESCRIPTION	QTY
1	12713	MECHANICAL SEAL ASSEMBLY	1
2	12901	SS REAR BRACKET WASHER	4
3	12717	O-RING FOR SCREW HEAD	4
4	M12712	2" FP MANIFOLD PUMP BODY ASSEMBLY	1
5	12705	POLY PUMP CHECK VALVE	1
6	12900	SS UPPER VOLUTE SCREW	1
7	12725	SS VOLUTE SCREWS	2
8	12719A	BODY O-RING	1
9	12754	O-RING SEGMENT	1
10	12720	SS BODY SCREWS	10
11	V07018	SS LOCK WASHERS	10
12	V07019	SS BODY NUTS	10
13	12775A	IMPELLER HEX NUT	1
14	12902A	IMPELLER KEY	1
15	12702A	POLY PUMP VOLUTE	1
16	12772	5 VANE IMPELLER	1
16	12771A	3 VANE IMPELLER	1
17	12703A	POLY PUMP REAR BRACKET	1
18	12710	O-RING FOR SEAL ASSEMBLY	1
19	12716	POLY PUMP SLINGER	1
20	12765A	SS IMPELLER BOLT	1
21	A204	O-RING	1
22	12715A	SS BRACKET SCREWS	4
KIT	12000A	POLY PUMP EPDM REPAIR KIT (ITEMS 2,4,7,8,14, 17,19,21,30, 12099)	1
KIT	12000AV	POLY PUMP FKM REPAIR KIT (ITEMS 2,4,7,8,14, 17,19,21,30, 12099)	1
KIT	12999A	PUMP SEAL/O-RING KIT (ITEMS 2,4,7,8,17,19,21,30, 12099)	1
KIT	12999AV	FKM PUMP SEAL/O-RING KIT (ITEMS 4-7,8,10,18, 23 & 12099)	1

KITS 2" POLY PUMPS

PART NO	EPDM REPAIR KIT NO	FKM REPAIR KIT NO	EPDM SEAL KIT NO	FKM SEAL KIT NO
M220PH5	12000A	12000AV	12999A	12999AV
M220PH6	12000A	12000AV	12999A	12999AV
M220P6PRO	12000A	12000AV	12999A	12999AV
M225PO	12000A	12000AV	12999A	12999AV

SEE 12000A & 12000AV KIT DRAWING ON PAGE 97

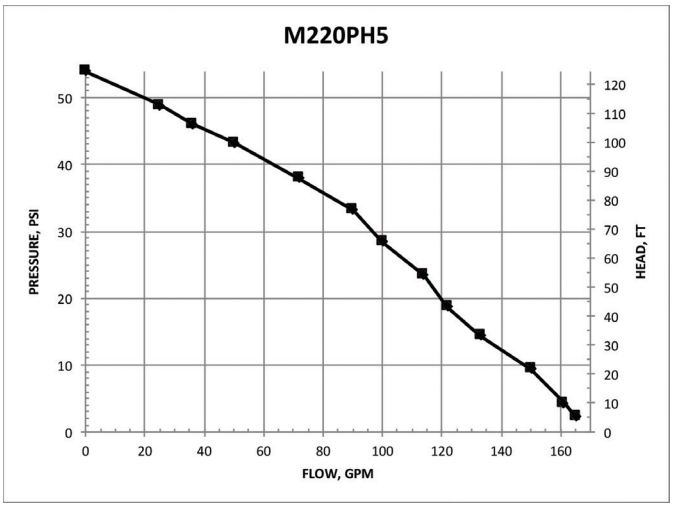

2" POLY MANIFOLD WET SEAL PUMPS

FEATURES

- Run dry capability
- Double seal contained in ethylene glycol reservoir. Carbon ceramic seal faces with stainless steel cup and spring with EPDM rubber
- Pump end separated from engine
- Large weep holes between pump and engine
- V-shaped for quicker priming
- See pages 39-45 on manifold fittings for easy plumbing.

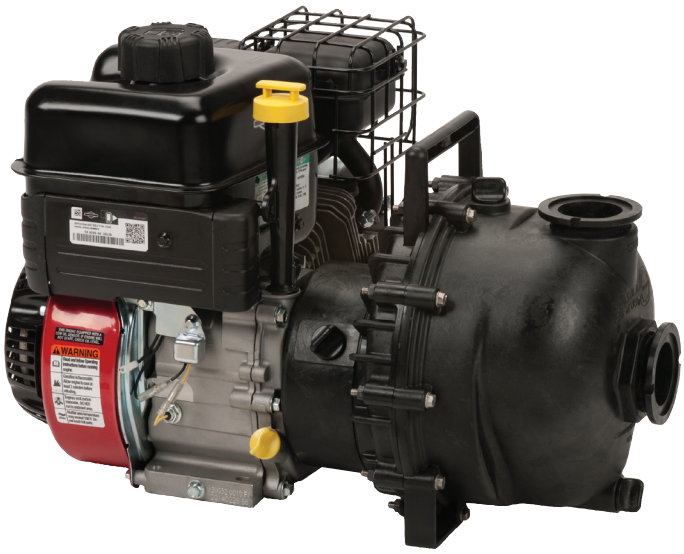

2" POLY MANIFOLD WET SEAL PUMPS W/GAS ENGINES			
PART NO	DESCRIPTION	HP	QTY
M220PH5W	2" POLY MANIFOLD WET SEAL PUMP W/5.5 HP HONDA® ENGINE	5.5	1

WARNING! DO NOT RUN PUMP DRY, RESTRICT OR REDUCE PORT SIZES OR DEAD HEAD PUMP

WARNING! DO NOT USE WITH FLAMMABLE LIQUIDS

2" POLY MANIFOLD WET SEAL PUMPS

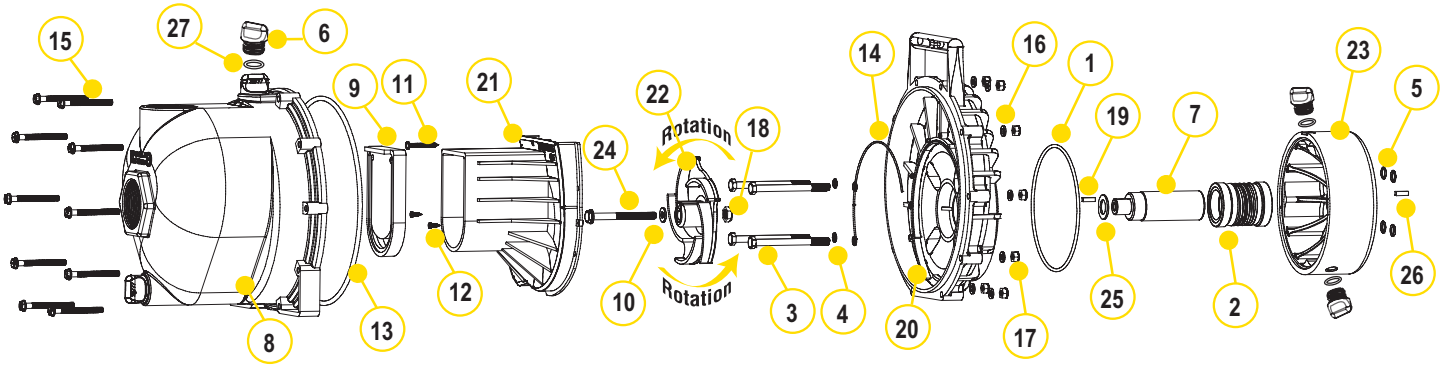

REPLACEMENT PARTS 2" POLY PUMPS			
ITEM	PART NO	DESCRIPTION	QTY
1	13719	O-RING	1
2	15035E	EPDM MECHANICAL SEAL ASSEMBLY	1
3	13034	5/16" -24 X 3 3/4" HHCS	4
4	12717	O-RING FOR BRACKET SCREW	4
5	12709	O-RING	4
6	12777	1/2" PLUG	4
7	12155	ADAPTER SHAFT	1
8	M12712	2" FP MANIFOLD PUMP BODY ASSEMBLY	1
9	12705	CHECK VALVE	1
10	A204	IMPELLER BOLT GASKET	1
11	12900	#10 X 1 1/2" PPH SMS	1
12	12725	#6 X 1/2" PPH SMS	2
13	12719A	BODY O-RING	1
14	12754	O-RING SEGMENT	1
15	12720	1/4" - 20 X 2 1/2" SL IND HWHS	10
16	V07018	1/4" LOCK WASHER	10
17	V07019	1/4" - 20 HEX NUT	10
18	12775A	7/16" - 14 HEX NUT	1
19	12902A	3/16" SQ. X 5/8" KEY	2
20	12707W	WET SEAL REAR BRACKET	1
21	12702A	VOLUTE	1
22	12772	5 VANE IMPELLER	1
23	12202W	WET SEAL RESERVOIR	1
24	12766	5/16" - 24 X 3 1/4" HFS	1
25	CV10175	GASKET	1
26	12902A	1/4" SQ. 3/4" KEY STOCK	1
27	UV15163	O-RING FOR DRAIN PLUG	4

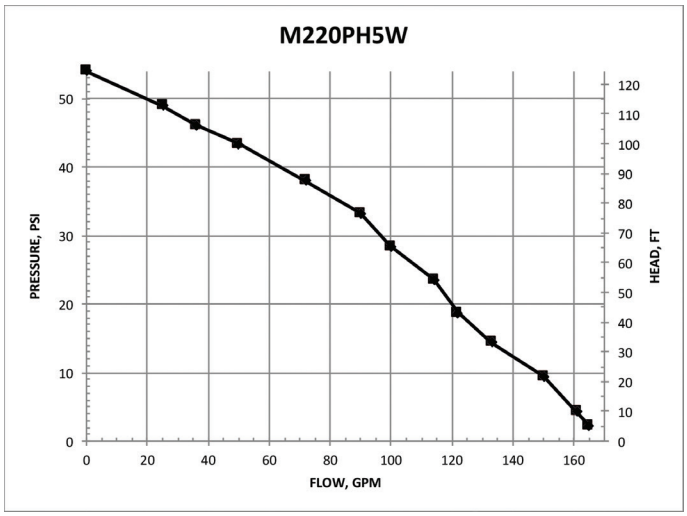

3" POLY PUMPS

FEATURES

- Pump end separated from engine
- Large weep holes between pump and engine
- V-shaped for quicker priming
- Pump only comes unassembled

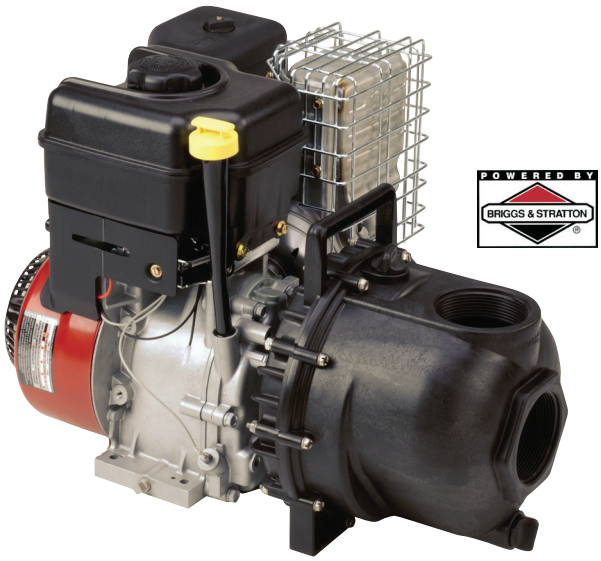

3" POLY PUMPS W/GAS ENGINES			
PART NO	DESCRIPTION	HP	QTY
300PH-6	3" POLY PUMP W/6.5 HP HONDA® ENGINE	6.5	1
300P11PRO	3" POLY PUMP W/11 HP BRIGGS & STRATTON® ENGINE PRO SERIES W/ELECTRIC START & PULL ROPE	11	1

WARNING! DO NOT RUN PUMP DRY, RESTRICT OR REDUCE PORT SIZES OR DEAD HEAD PUMP

WARNING! DO NOT USE WITH FLAMMABLE LIQUIDS

3" POLY BEARING PEDESTAL			
PART NO	DESCRIPTION	HP	QTY
300PB	3" POLY BEARING PEDESTAL W/ ¾" SHAFT & 4 VANE IMPELLER	N/A	1

3" POLY PUMP ONLY			
PART NO	DESCRIPTION	HP	QTY
300PO	3" POLY PUMP ONLY W/ ¾" SHAFT & 4 VANE IMPELLER	N/A	1

3" POLY PUMPS

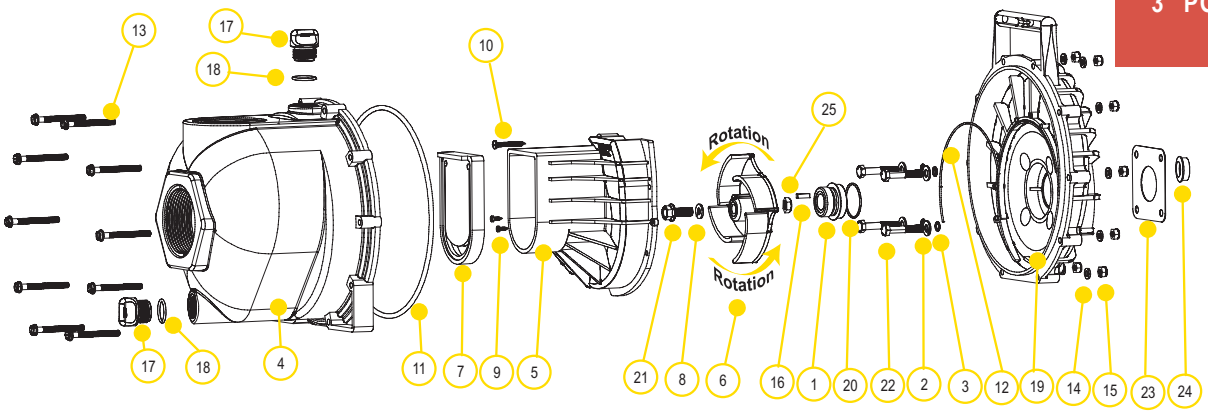

REPLACEMENT PARTS 3" POLY PUMPS

ITEM	PART NO	DESCRIPTION	QTY
1	12713	SEAL ASSEMBLY	1
2	12901	SS REAR BRACKET WASHER	1
3	12717	O-RING FOR SCREW HEAD	1
4	13712	BODY ASSEMBLY	1
5	13702	POLY PUMP VOLUTE	1
6	13771	4 VANE TRIMMED IMPELLER (300PH-6, 300PB & 300PO)	1
6	13772	4 VANE IMPELLER (300P11PRO)	1
7	12705	CHECK VALVE	1
8	A204	O-RING	1
9	12900	SS UPPER VOLUTE SCREW	1
10	12725	SS VOLUTE SCREWS	1
11	12719A	BODY O-RING	1
12	12754	O-RING SEGMENT	1
13	12720	SS BODY SCREWS	1
14	V07018	SS LOCK WASHERS	1
15	V07019	SS BODY NUTS	1
16	12902A	IMPELLER KEY	1
17	13777	¾" PLUG	1
18	13778	O-RING	1
19	12703A	POLY PUMP REAR BRACKET	1
20	12710	O-RING FOR SEAL ASSEMBLY	1
21	12765A	SS IMPELLER BOLT 5⁄16 X 24 X 1.12 (300PH-6)	1
21	13765	SS IMPELLER BOLT 3⁄8 X 24 X 1.75 (300P11PRO)	1
22	12715A	SS BRACKET SCREWS	1
23	15751	REAR BRACKET SHIM	1
24	12716	POLY PUMP SLINGER	1
25	12775A	IMPELLER HEX NUT	1
N/S	12882A	BEARING PEDESTAL	1
N/S	12099	7⁄16"-14 X 1.25" HHCS	1
N/S	12000A	POLY PUMP EPDM REPAIR KIT (ITEMS 1, 3, 6-8, 11, 12, 16, 18, 20, 24 & 12099)	1
N/S	13999	PUMP SEAL/O-RING KIT (ITEMS 1, 3, 8, 11, 12, 18, 20, 24 & 12099)	1

KITS 3" POLY PUMPS

PART NO	EPDM REPAIR KIT NO	EPDM SEAL KIT NO
300PH-6	12000A	13999
300P11PRO	N/A	13999
300PB	12000A	13999
300PO	12000A	13999

SEE 12000A KIT DRAWING ON PAGE 97

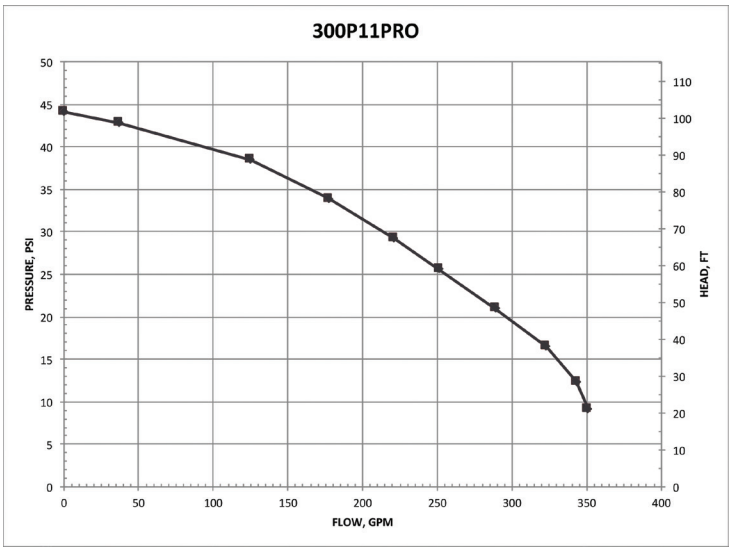

3" POLY MANIFOLD PUMPS

FEATURES

- Pump end separated from engine
- Large weep holes between pump and engine
- V-shaped for quicker priming
- Pump only comes unassembled
- See pages 39-45 on manifold fittings for easy plumbing.

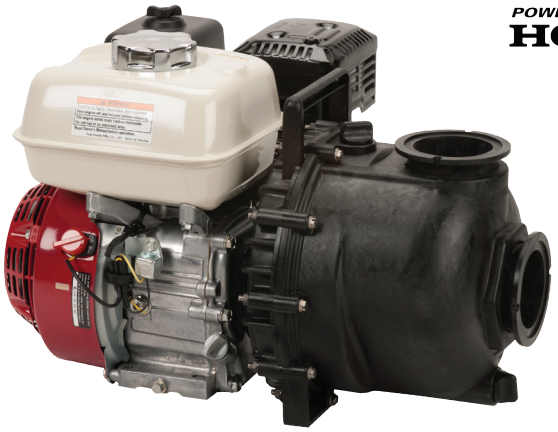

POWERED by HONDA

3" POLY MANIFOLD PUMPS W/GAS ENGINES			
PART NO	DESCRIPTION	HP	QTY
M300PH6	3" POLY MANIFOLD PUMP W/6.5 HP HONDA® ENGINE	6.5	1
M300P11PRO	3" POLY MANIFOLD PUMP W/11 HP BRIGGS & STRATTON® PRO SERIES W/ELECTRIC START & PULL ROPE	11	1

WARNING! DO NOT RUN PUMP DRY, RESTRICT OR REDUCE PORT SIZES OR DEAD HEAD PUMP

3" POLY MANIFOLD BEARING PEDESTAL			
PART NO	DESCRIPTION	HP	QTY
M300PB	3" POLY MANIFOLD BEARING PEDESTAL W/ ¾" SHAFT & 4 VANE IMPELLER	N/A	1

WARNING! DO NOT USE WITH FLAMMABLE LIQUIDS

3" POLY MANIFOLD PUMP ONLY			
PART NO	DESCRIPTION	HP	QTY
M300PO	3" POLY MANIFOLD PUMP ONLY W/ ¾" SHAFT & 4 VANE IMPELLER	N/A	1

3" POLY MANIFOLD PUMPS

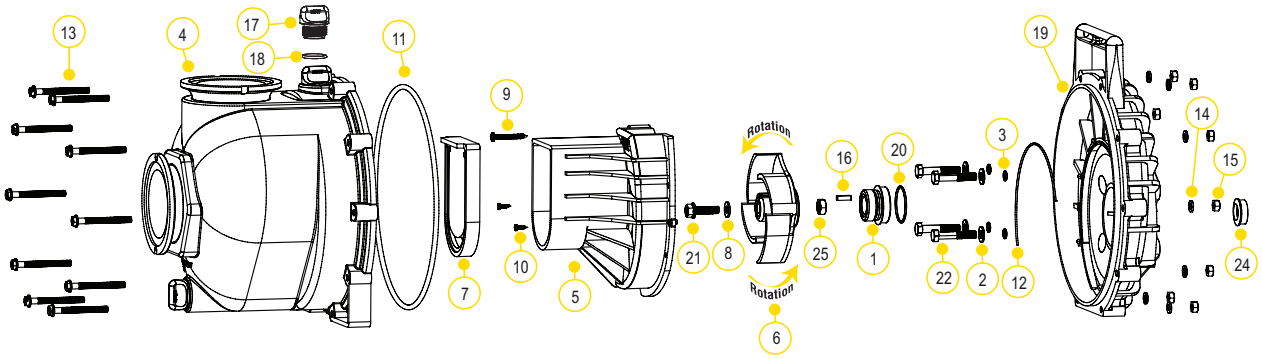

REPLACEMENT PARTS 3" POLY MANIFOLD PUMPS

ITEM	PART NO	DESCRIPTION	QTY
1	12713	SEAL ASSEMBLY	1
2	12901	SS REAR BRACKET WASHER	4
3	12717	O-RING FOR SCREW HEAD	4
4	M13712	MANIFOLD BODY ASSEMBLY	1
5	13702	POLY PUMP VOLUTE	1
6	13771	4 VANE TRIMMED IMPELLER (M300PH-6, M300PB & M300PO)	1
6	13772	4 VANE IMPELLER (M300P11PRO)	1
7	12705	CHECK VALVE	1
8	A204	O-RING	1
9	12900	SS UPPER VOLUTE SCREW	4
10	12725	SS VOLUTE SCREWS	2
11	12719A	BODY O-RING	1
12	12754	O-RING SEGMENT	1
13	12720	SS BODY SCREWS	10
14	V07018	SS LOCK WASHERS	10
15	V07019	SS BODY NUTS	10
16	12902A	IMPELLER KEY	1
17	13777	¾" PLUG	2
18	13778	O-RING	2
19	12703A	POLY PUMP REAR BRACKET	1
20	12710	O-RING FOR SEAL ASSEMBLY	1
21	12765A	SS IMPELLER BOLT 5⁄16 X 24 X 1.12 (-6)	1
21	13765	SS IMPELLER BOLT 3⁄8 X 24 X 1.75 (M300P11PRO)	1
22	12715A	SS BRACKET SCREWS	4
23	15751	REAR BRACKET SHIM	1
24	12716	POLY PUMP SLINGER	1
25	12775A	IMPELLER HEX NUT	1
N/S	12882A	BEARING PEDESTAL	1
N/S	12099	7⁄16"-14 X 1.25" HHCS	1
N/S	12000A	POLY PUMP EPDM REPAIR KIT (ITEMS 1, 3, 6-8, 11, 12, 16, 18, 20, 24 & 12099)	1
N/S	13999	PUMP SEAL/O-RING KIT (ITEMS 1, 3, 8, 11, 12, 18, 20, 24 & 12099)	1

KITS 3" POLY PUMPS

PART NO	EPDM REPAIR KIT NO	EPDM SEAL KIT NO
M300PH6	12000A	13999
M300P11PRO	N/A	13999
M300PB	12000A	13999
M300PO	12000A	13999

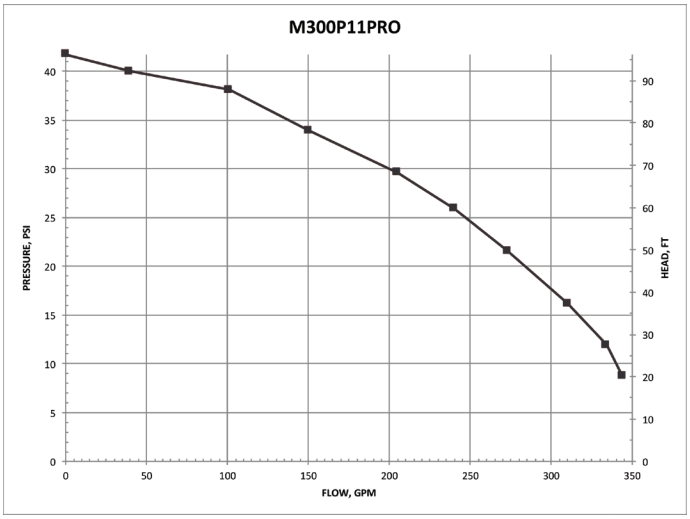

3" POLY PUMPS WITH HYDRAULIC MOTORS

FEATURES

- Precision molded construction
- Lightweight
- Corrosion resistant
- Low maintenance
- Hydraulic fluid capacity is minimum 6 gallons and maximum 10 gallons
- Open or closed system
- 3600 R.P.M.
- Recommendation to use the motor spool control valve or a suitable equivalent. The lack of such a valve in this circuit may cause failure to the hydraulic motor.

3" POLY PUMPS W/HYDRAULIC MOTORS			
PART NO	DESCRIPTION	HP	QTY
300PHY	3" POLY PUMP W/12 HP HYDRAULIC MOTOR	12	1
300PHYW	3" POLY WET SEAL PUMP W/12 HP HYDRAULIC MOTOR	12	1
305PHAW	3" POLY WET SEAL PUMP W/5 VANE IMPELLER W/OUT HYDRAULIC MOTOR	N/A	1

WARNING! DO NOT RUN PUMP DRY, RESTRICT OR REDUCE PORT SIZES OR DEAD HEAD PUMP

WARNING! DO NOT USE WITH FLAMMABLE LIQUIDS

SPOOL VALVE ASSEMBLY DIAGRAM

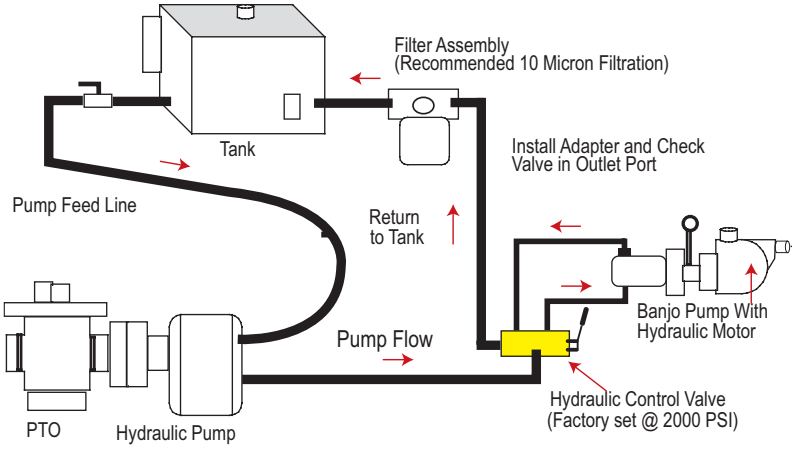

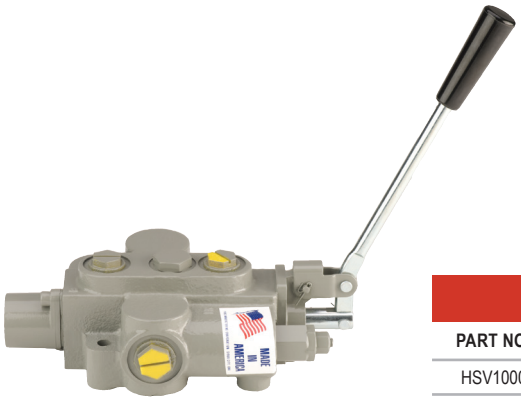

HYDRAULIC MOTOR SPOOL VALVE			
PART NO	DESCRIPTION	HP	QTY
HSV1000	HYDRAULIC MOTOR SPOOL VALVE	N/A	1

3" POLY PUMPS WITH HYDRAULIC MOTORS

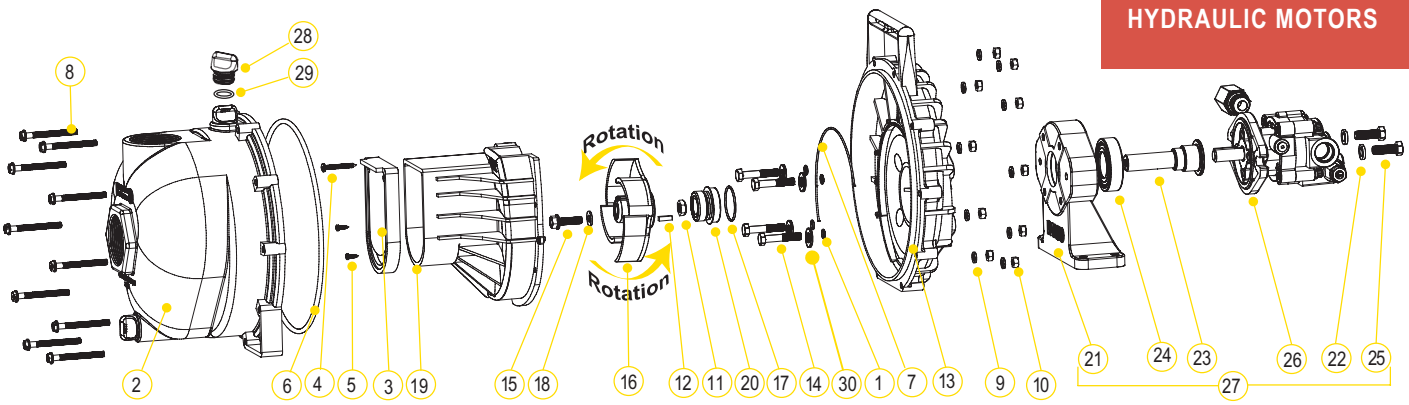

REPLACEMENT PARTS 3" POLY PUMPS

ITEM	PART NO	DESCRIPTION	QTY
1	12717	O-RING FOR SCREW HEADS	4
2	13712	BODY ASSEMBLY	1
3	12705	CHECK VALVE	1
4	12900	SS UPPER VOLUTE SCREW	4
5	12725	SS VOLUTE SCREWS	2
6	12719A	BODY O-RING	1
7	12754	O-RING SEGMENT	1
8	12720	SS BODY SCREWS	10
9	V07018	SS LOCK WASHERS	10
10	V07019	SS BODY NUTS	10
11	12775A	IMPELLER HEX NUT	1
12	12902A	IMPELLER KEY	1
13	12703A	POLY PUMP REAR BRACKET	1
14	12715A	5/16"-24 X 1.75" HHCS	4
15	12765A	SS IMPELLER BOLT	1
16	13772	TRIMMED 4 VANE IMPELLER	1
17	12710	O-RING FOR SEAL ASSEMBLY	1
18	A204	O-RING	1
19	13702	POLY PUMP VOLUTE	1
20	12713	MECHANICAL SEAL ASSEMBLY	1
21	12049E	HYDRAULIC PEDESTAL HOUSING (MUST ORDER 17056E & 12055E)	1
22	V20018	3/8" LOCK WASHER	2
23	12055E	ADAPTER SHAFT	1
24	17056E	BEARING	1
25	18010SS	3/8" - 16 X 1 1/8" SS CAP SCREW HXHD	2
26	HY1013	HYDRAULIC MOTOR	1
27	12600B	COMPLETE HYDRAULIC ASSEMBLY	1
28	13777	3/4" PLUG	2
29	13778	O-RING	2
30	12901	SS REAR BRACKET WASHER (300PHY)	4
N/S	HY1003	HYDRAULIC MOTOR SEAL KIT	1
KIT	12000A	POLY PUMP EPDM REPAIR KIT (ITEMS 1, 3, 6, 7, 16, 18, 20, 29, 12099)	1
KIT	13999	PUMP SEAL/O-RING KIT (ITEMS 2,4,7-8,16,18,19, 21, 30, 12099)	1

KITS 3" POLY PUMPS

PART NO	EPDM REPAIR KIT NO	EPDM SEAL KIT NO	HYDRAULIC MOTOR SEAL KIT
300PHY	12000A	13999	HY1003

HYDRAULIC MOTOR DATA

U.S. GALLONS/REV.	0.0025
CUBIC INCHES/REV.	0.580
LITERS/REV.	0.0097
MAX HYDRAULIC PRESSURE	2000 PSI
MIN HYDRAULIC PRESSURE	200 PSI
INLET PORT	SAE 10 (7/8-14 UNF-2B)
OUTLET PORT	SAE 10 (7/8-14 UNF-2B)
MINIMUM GPM REQUIRED	6 GPM 2400 RPM
MAXIMUM GPM REQUIRED	10 GPM 4000 RPM
IDEAL GPM REQUIRED	9 GPM 3600 RPM
CONNECTION INFORMATION	
INLET	"A" PORT
OUTLET	"B" PORT
SUPPLIED CHECK VALVE IS TO ENSURE PROPER ROTATION OF THE BANJO PUMP. PLACE CHECK VALVE IN OUTLET PORT (MARKED "B") FOR PROPER RIGHT HAND ROTATION.	
SPOOL VALVE INFORMATION	
REQUIRED OUTLET FLOW	MIN 6 GPM / MAX 10 GPM
REQUIRED SYSTEM PRESSURE	MIN 600 PSI / MAX 3000 PSI

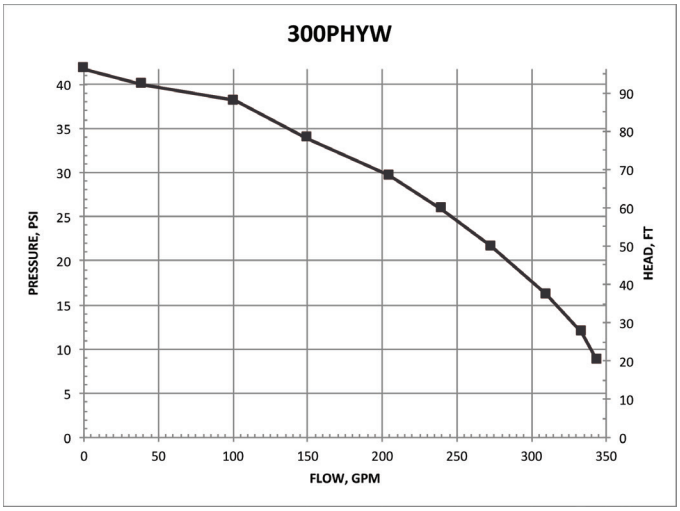

3" POLY WET SEAL PUMPS

FEATURES

- Run dry capability
- Double seal contained in ethylene glycol reservoir. Carbon ceramic seal faces with stainless steel cup and spring with EPDM rubber.
- V-shaped for quicker priming
- Engine warranty service available at authorized Briggs & Stratton® and Honda® dealers
- Due to weight and size of pumps, Banjo ships these by truck only.

WARNING! DO NOT USE WITH FLAMMABLE LIQUIDS

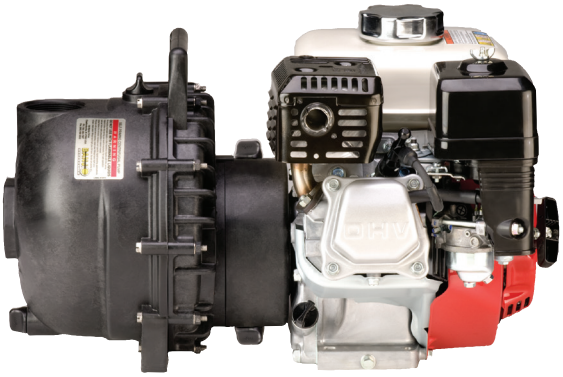

3" POLY WET SEAL PUMPS W/GAS ENGINES

PART NO	DESCRIPTION	HP	QTY
300PH6W	3" POLY WET SEAL PUMP W/6 HP HONDA® ENGINE	6	1
300P11PROW	3" POLY WET SEAL PUMP W/11 HP BRIGGS & STRATTON® ENGINE PRO SERIES W/ELECTRIC START & PULL ROPE	11	1
300PH13W	3" POLY WET SEAL PUMP W/13 HP HONDA® ENGINE W/ELECTRIC START & PULL ROPE	13	1

3" POLY WET SEAL BEARING PEDESTAL

PART NO	DESCRIPTION	HP	QTY
300PBW	3" POLY WET SEAL BEARING PEDESTAL W/ ¾" SHAFT & 4 VANE IMPELLER	N/A	1

3" POLY WET SEAL PUMP ONLY

PART NO	DESCRIPTION	HP	QTY
300POW	3" POLY WET SEAL PUMP ONLY FOR 1" SHAFT	N/A	1
300POW6	3" POLY WET SEAL PUMP ONLY FOR ¾" SHAFT	N/A	1

3" POLY WET SEAL PUMPS

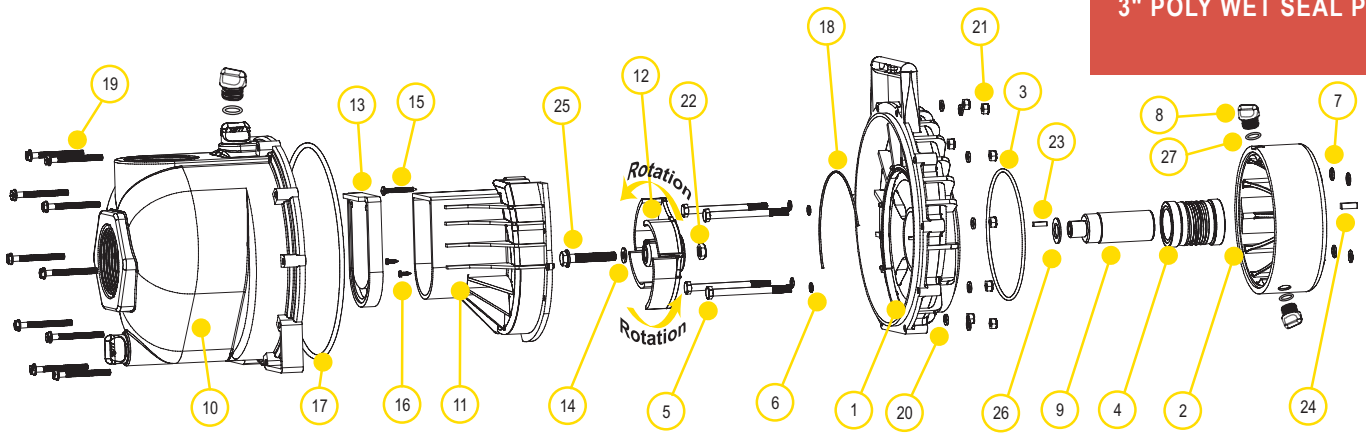

REPLACEMENT PARTS 3" POLY PUMPS

ITEM	PART NO	DESCRIPTION	QTY
1	12703AW	WET SEAL REAR BRACKET	1
2	12201W	WET SEAL RESERVOIR	1
2	12202W	WET SEAL RESERVOIR (300POW6)	1
3	13719	O-RING	1
3	13719V	FKM O-RING (301POWV)	1
4	15035E	EPDM MECHANICAL SEAL ASSEMBLY	1
4	15035	MECHANICAL SEAL ASSEMBLY (301POWV)	1
5	13034	5⁄16" -24 X 3 3⁄4" HHCS	4
6	12717	O-RING FOR BRACKET SCREW	4
6	12717V	FKM O-RING FOR BRACKET SCREW (301POWV)	4
7	12709	O-RING	4
7	12709V	FKM O-RING (301POWV)	4
8	12777	1⁄2" PLUG	4
9	13055	ADAPTER SHAFT (300PH6W & 300PH13W)	1
9	N/A	ADAPTER SHAFT (300P11PROW & 301POWV)	1
9	12155	ADAPTER SHAFT (300PH6W)	1
10	13712	BODY ASSEMBLY	1
10	13712	FKM BODY ASSEMBLY (301POWV)	1
11	13702	VOLUTE	1
12	13772	4 VANE IMPELLER	1
12	13771	TRIMMED IMPELLER (300POW6)	1
13	12705	CHECK VALVE	1
13	12705V	FKM CHECK VALVE (301POWV)	1
14	A204	IMPELLER BOLT GASKET	1
14	A204V	FKM IMPELLER BOLT GASKET (301POWV)	1
15	12900	#10 X 1 1⁄2" PPH SMS	1
16	12725	#6 X 1⁄2" PPH SMS	2
17	13719	BODY O-RING	1
17	13719V	FKM BODY O-RING (301POWV)	1
18	12754	O-RING SEGMENT	1
18	12754V	FKM O-RING SEGMENT (301POWV)	1
19	12720	1⁄4" - 20 X 2 1⁄2" SL IND HWHS	10
20	V07018	1⁄4" LOCK WASHER	10
21	V07019	1⁄4" - 20 HEX NUT	10
22	12775A	7⁄16" - 14 HEX NUT	1
23	12902A	3⁄16" SQ. X 5⁄8" KEY	2
24	16901	1⁄4" SQUARE KEY	1
25	13766	3⁄8-24 X 2 1⁄4" HFS	1

REPLACEMENT PARTS 3" POLY PUMPS

ITEM	PART NO	DESCRIPTION	QTY
26	CV10175	GASKET	1
26	CV10175V	FKM GASKET (301POWV)	1
27	UV15163	O-RING FOR DRAIN PLUG	4
27	UV15163V	FKM O-RING FOR DRAIN PLUG (301POWV)	4

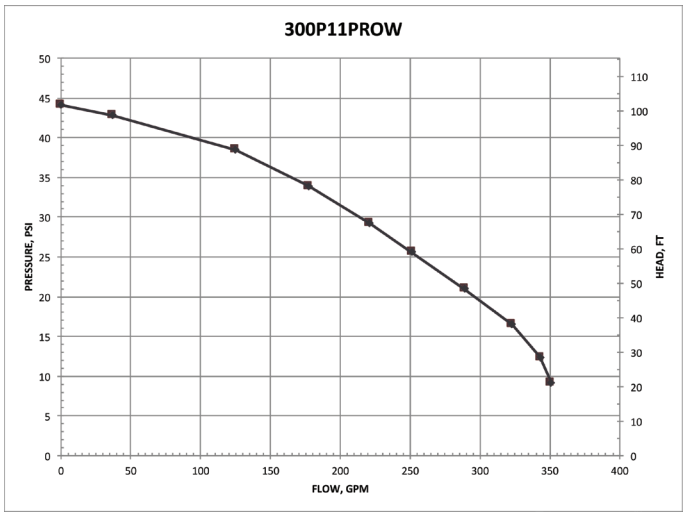

3" POLY MANIFOLD WET SEAL PUMPS

FEATURES

- Run dry capability
- Double seal contained in ethylene glycol reservoir. Carbon ceramic seal faces with stainless steel cup and spring with EPDM rubber
- Pump end separated from engine
- V-shaped for quicker priming
- Engine warranty service available at authorized dealers
- See pages 39-45 on manifold fittings for easy plumbing.

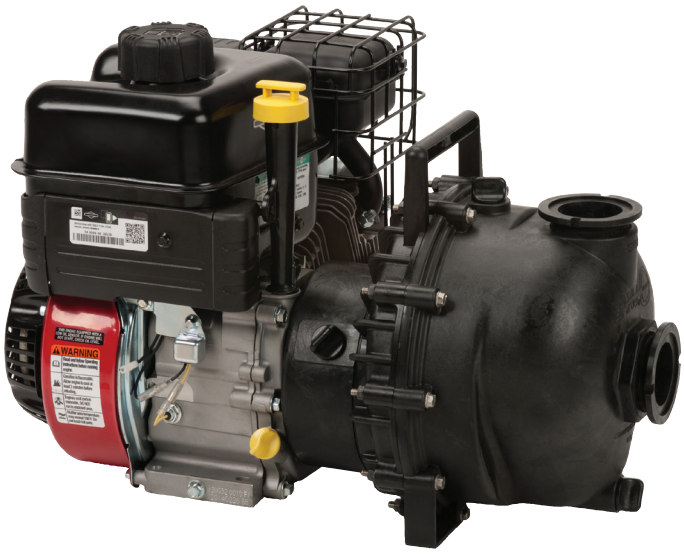

3" POLY MANIFOLD WET SEAL PUMPS W/GAS ENGINES

PART NO	DESCRIPTION	HP	QTY
M300PH6W	3" POLY MANIFOLD WET SEAL PUMP W/6 HP HONDA® ENGINE	6	1

3" POLY MANIFOLD WET SEAL PUMP ONLYS

PART NO	DESCRIPTION	HP	QTY
M300POW6	3" POLY MANIFOLD WET SEAL PUMP ONLY FOR ¾" SHAFT	N/A	1

3" POLY MANIFOLD WET SEAL PUMP W/HYDRAULIC

PART NO	DESCRIPTION	HP	QTY
M305PHYW	3" POLY MANIFOLD WET SEAL PUMP W/HYDRAULIC MOTOR	N/A	1

WARNING! DO NOT USE WITH FLAMMABLE LIQUIDS

3" POLY MANIFOLD WET SEAL PUMPS

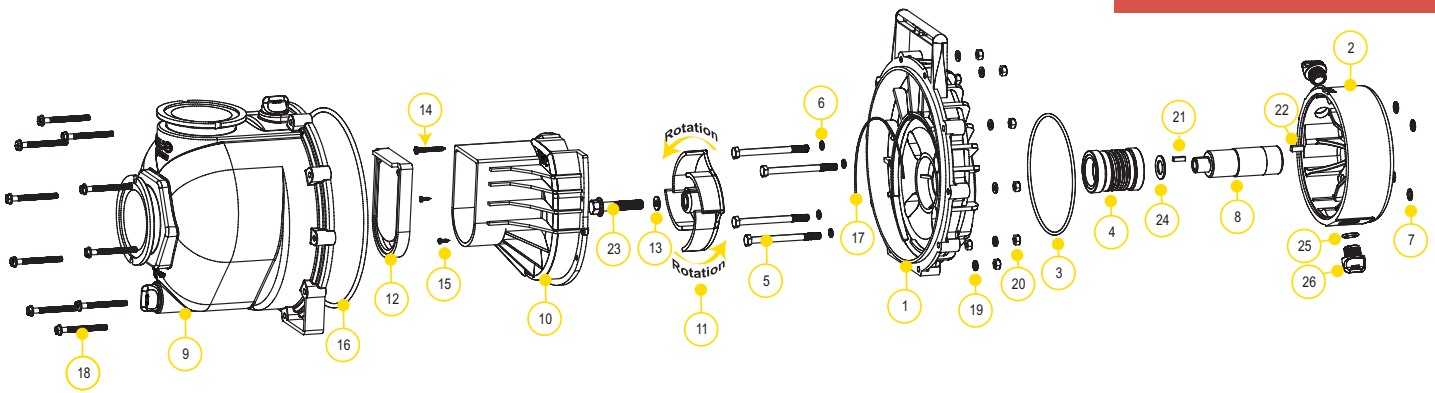

REPLACEMENT PARTS 3" POLY PUMPS

ITEM	PART NO	DESCRIPTION	QTY
1	12707W	WET SEAL REAR BRACKET FOR 6 HP HONDA® ENGINE & BEARING PEDESTAL	1
2	12202W	WET SEAL RESERVOIR FOR 6 HP HONDA® ENGINE & BEARING PEDESTAL	1
3	13719	O-RING	1
4	15035E	MECHANICAL SEAL ASSEMBLY EPDM	1
5	13034	5/16" - 24 X 3 3/4" HHCS	4
6	12717	O-RING FOR BRACKET SCREW	4
7	12709	O-RING	4
8	12155	ADAPTER SHAFT FOR 6 HP HONDA® ENGINE & BEARING PEDESTAL	1
9	M13712	MANIFOLD BODY ASSEMBLY	1
10	13702	VOLUTE	1
11	13772	4 VANE IMPELLER	1
12	12705	CHECK VALVE	1
13	A204	O-RING	1
14	12900	#10 X 1 1/2" PPH SMS 18-8 SS	1
15	12725	#6 X 1/2" PPH SMS 18-8 SS	1
16	12719A	BODY O-RING	1
17	12754	O-RING SEGMENT	1
18	12720	1/4" - 20 X 2 1/2" SL IND HWHS	10
19	V07018	1/4" LOCK WASHER	10
20	V07019	1/4" - 20 HEX NUT	10
21	12902A	3/16" SQ. X 5/8" KEY	1
22	16901	1/4" SQ. 3/4" KEY STOCK	1
23	12766	5/16"-24 X 3 1/4" HFS FOR 6 HP HONDA® ENGINE & BEARING PEDESTAL	1
24	CV10175	GASKET	1
25	UV15163	O-RING	2
26	12777	1/2" PLUG	2

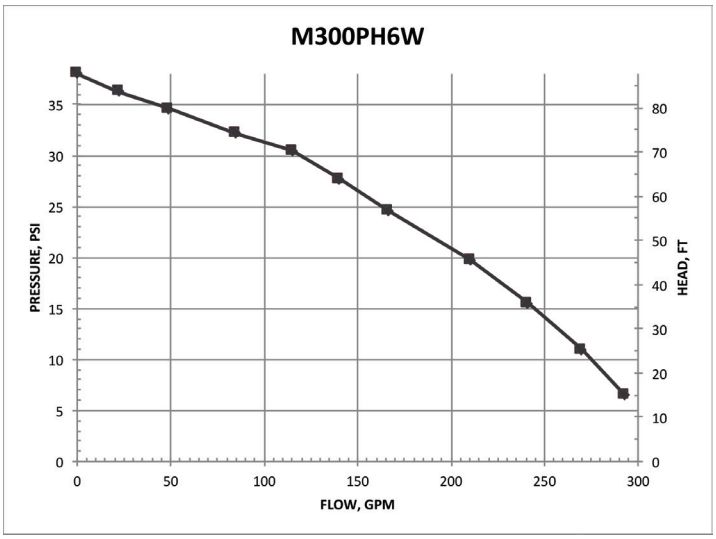

1½" - 2" CAST IRON PUMPS

FEATURES

- Cast iron construction for rugged dependable service
- Stainless steel shaft sleeve to protect engine shaft
- Carbon ceramic seal with stainless steel cup and spring with FKM rubber
- Replaceable inlet and outlet flanges
- Dynamically balanced impeller
- Pump only packs complete and ready for attachment to gasoline engine
- Pedestal pump for long coupling to electric motor
- Recommendation for ⅝" shaft: 56C frame size, 3 HP, 3450 RPM & 5" max impeller for close coupling to electric motors
- Recommendation for ⅞" shaft: 145TC frame size, 3 HP, 3450 RPM & 5" max impeller for close coupling to electric motors
- Engine warranty service available at authorized dealers

WARNING! DO NOT RUN PUMP DRY, RESTRICT OR REDUCE PORT SIZES OR DEAD HEAD PUMP

WARNING! DO NOT USE WITH FLAMMABLE LIQUIDS

POWERED BY BRIGGS & STRATTON

2" CAST IRON PUMP W/GAS ENGINES

PART NO	DESCRIPTION	HP	QTY
200PI-3	2" CAST IRON PUMP W/3.5 HP BRIGGS & STRATTON® ENGINE	3.5	1
200PI6PRO	2" CAST IRON PUMP W/6.5 HP BRIGGS & STRATTON® ENGINE PRO SERIES	6.5	1
200PIH-5	2" CAST IRON PUMP W/5.5 HP HONDA® ENGINE	5.5	1
200PIH5E	2" CAST IRON PUMP W/5.5 HP HONDA® ENGINE W/ ELECTRIC START	5.5	1

2" CAST IRON PUMP ONLY

PART NO	DESCRIPTION	HP	QTY
200POI	2" CAST IRON PUMP ONLY W/ ¾" SHAFT SLEEVE	N/A	1

1½" CAST IRON C-FLANGE PUMPS

PART NO	DESCRIPTION	HP	QTY
150POICF5/8-4.1	1½" CAST IRON C-FLANGE PUMP W/ ⅝" SHAFT SLEEVE & 4.1 IMPELLER	N/A	1

2" CAST IRON C-FLANGE PUMPS

PART NO	DESCRIPTION	HP	QTY
200POICF5/8	2" CAST IRON C-FLANGE PUMP W/ ⅝" SHAFT SLEEVE	N/A	1
200POICF7/8	2" CAST IRON C-FLANGE PUMP W/ ⅞" SHAFT SLEEVE	N/A	1

2" CAST IRON BEARING PEDESTAL

PART NO	DESCRIPTION	HP	QTY
200PBI	2" CAST IRON BEARING PEDESTAL W/ ¾" STRAIGHT SHAFT	N/A	1

1½" - 2" CAST IRON PUMPS

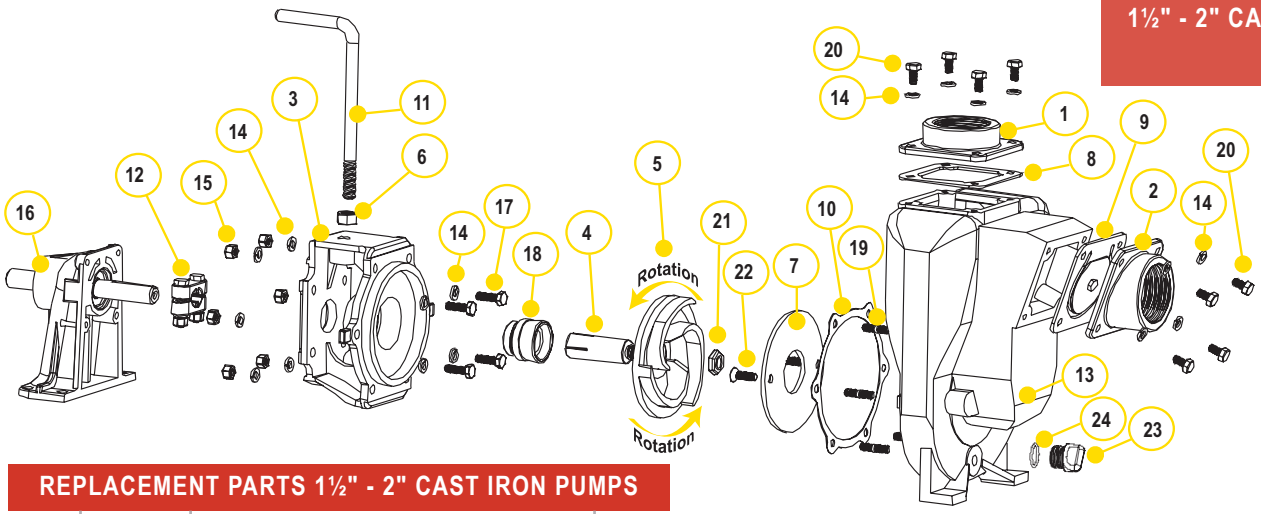

REPLACEMENT PARTS 1½" - 2" CAST IRON PUMPS

ITEM	PART NO	DESCRIPTION	QTY
1	17001	1½" NPT OUTLET FLANGE	1
1	17000	2" NPT OUTLET FLANGE	1
2	17003	1½" NPT INLET FLANGE	1
2	17002	2" NPT INLET FLANGE	1
3	17004	ADAPTER FOR GAS ENGINE	1
3	17046	C-FACE ADAPTER	1
4	17005	⅝" SLEEVE DRIVE FOR ELECTRIC MOTOR	1
4*	17006	¾" SLEEVE DRIVE	1
4	17007	⅞" SLEEVE DRIVE FOR ELECTRIC MOTOR	1
5*	17008	5" IMPELLER	1
5	17008-4.1	4.1" TRIMMED IMPELLER	1
6	17010	½" HEX NUT	1
7*	17011	WEAR PLATE	1
8	17013	EPDM GASKET	1
9	17016	CHECK VALVE ASSEMBLY	1
10*	17018	GASKET ADAPTER	1
11	15022	HANDLE	1
12	17023	⅝" CLAMP FOR ¾" SHAFT ASSEMBLY (OLD STYLE)	1
12	17123	⅝" CLAMP FOR ¾" SHAFT ASSEMBLY (KEYED)	1
12	17024	⅞" CLAMP FOR SHAFT ASSEMBLY	1
13	17026	PUMP HOUSING	1
14	V10118	5/16" LOCK WASHER	18
15	V10119	5/16" - 18 SS HEX NUT	6
N/S	12883B	BEARINGS	1
16	12882A	COMPLETE PEDESTAL ASSEMBLY	2
17	17040	5/16" -24 X 1.00" CAP SCREW	1
18	17028	EPDM SEAL ASSEMBLY	4
18*	17035	FKM SEAL ASSEMBLY	1
18	17035SD	SEVERE DUTY SEAL	1
19	17042	STUD	6
20	17019	5/16"-18 X ¾" CAP SCREW	8
21	17009B	⅝" IMPELLER NUT	1
22	17130	5/16-18 X 1.00" FHSCS, 18-8 SS	2
23	12777	½" PLUG	1
24	UV15163	O-RING	1
N/S	17033	Z RAILS (PAIR)	1
N/S	17100	REPAIR KIT (CONSISTS OF ITEMS 4*, 5*, 7,10,18*)	1

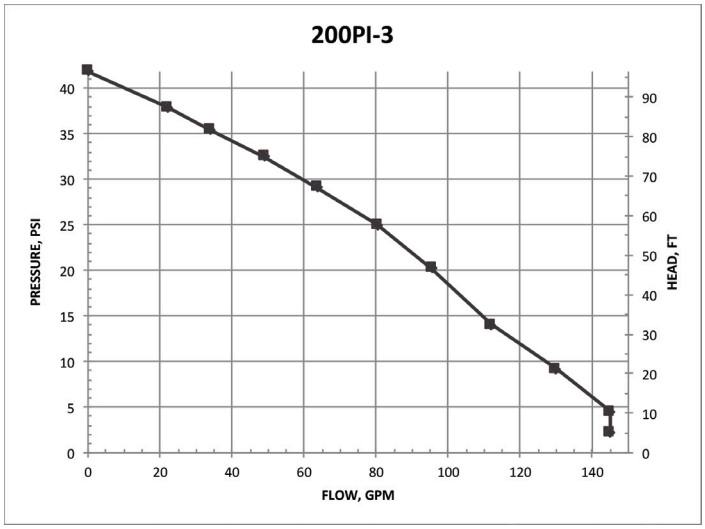

2" CAST IRON WET SEAL PUMPS

FEATURES

- Cast iron construction for rugged dependable service
- Stainless steel hardware
- FKM double seal contained in glycol reservoir
- Replaceable inlet and outlet flanges
- Dynamically balanced impeller
- Pump only packs complete and ready for attachment to gasoline engine
- Pedestal pump for long coupling to electric motor
- Due to weight and size of pumps, Banjo ships these by truck only.

2" CAST IRON WET SEAL PUMPS W/GAS ENGINES

PART NO	DESCRIPTION	HP	QTY
201PIH5W	2" CAST IRON WET SEAL PUMP W/5.5 HP HONDA® ENGINE	5.5	1

2" CAST IRON WET SEAL PUMP ONLY

PART NO	DESCRIPTION	HP	QTY
201POIW	2" CAST IRON WET SEAL PUMP ONLY	N/A	1

WARNING! DO NOT RUN PUMP DRY, RESTRICT OR REDUCE PORT SIZES OR DEAD HEAD PUMP

WARNING! DO NOT USE WITH FLAMMABLE LIQUIDS

2" CAST IRON WET SEAL PUMP BEARING PEDESTAL

PART NO	DESCRIPTION	HP	QTY
201PBIW	2" CAST IRON WET SEAL PUMP WITH BEARING PEDESTAL	N/A	1

2" CAST IRON WET SEAL PUMPS

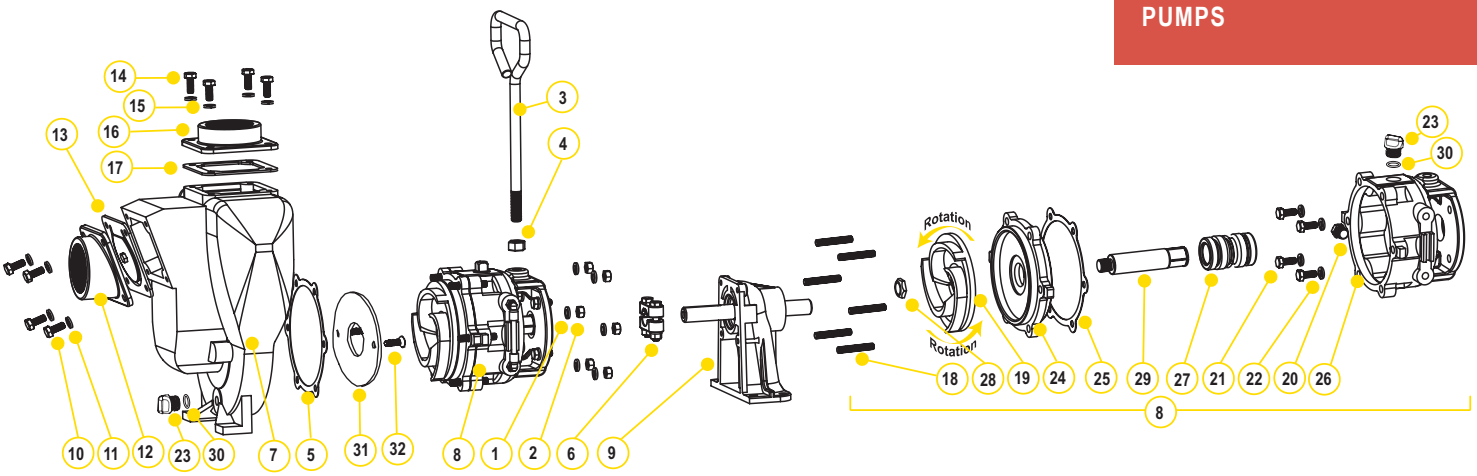

REPLACEMENT PARTS 2" CAST IRON PUMPS

ITEM	PART NO	DESCRIPTION	QTY
1	V10118	5/16" LOCK WASHER	6
2	V10119	5/16" -18 HEX NUT	6
3	15022	HANDLE	1
4	17010	1/2" HEX NUT	1
5	17018	GASKET ADAPTER	1
6	17123	5/8" CLAMP, 3/4" SHAFT ASSEMBLY KEYED	1
7	17226	PUMP HOUSING	1
8	N/A	WET SEAL ASSEMBLY	1
9	12882A	BEARING PEDESTAL	1
10	17019	5/16"-18 X 3/4" HHCS	4
11	V10118	5/16" LOCK WASHER	4
12	17002	2" NPT INLET FLANGE	1
13	17016	EPDM CHECK VALVE GASKET ASSEMBLY	1
14	17019	5/16" -18 X 3/4" HHCS	4
15	V10118	5/16" LOCK WASHER	4
16	17000	2" NPT OUTLET FLANGE	1
17	17013	EPDM OUTLET GASKET	1
18	17242	HOUSING STUD	6
19	17208	IMPELLER	1
20	17032	PIPE PLUG	1
21	17019	5/16"-18 X 3/4" CAP SCREW	4
22	V10118	5/16" LOCK WASHER	4
23	12777	1/2" PLUG	2
24	17202	COVER PLATE	1
25	17018	GASKET ADAPTER	1
26	17201A	RESERVOIR	1
27	17235	FKM MECHANICAL SEAL ASSEMBLY	1
28	17009B	5/8" IMPELLER NUT	1
29	17206A	ADAPTER SHAFT	1
30	UV15163	O-RING	2
31	17011	Wear Plate	1
32	17130	5/16-18 X 1.00" FHSCS, 18-8 SS	1

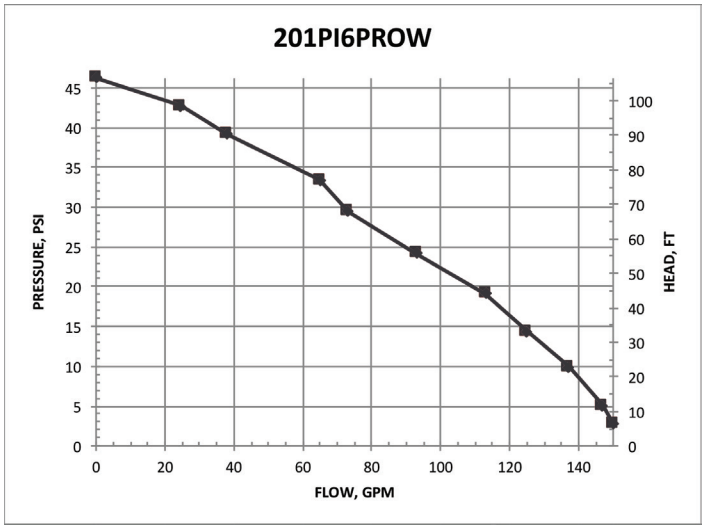

2" CAST IRON PUMPS WITH ELECTRIC MOTORS

FEATURES

- Cast iron construction for rugged dependable service
- Stainless steel shaft sleeve to protect engine shaft
- Carbon ceramic seal with stainless steel cup and spring with FKM rubber
- Replaceable inlet and outlet flanges
- Dynamically balanced impeller
- Pump only packs complete and ready for attachment to gasoline engine
- Due to weight and size of pumps, Banjo ships these by truck only.
- Motor warranty service available at authorized dealers
- Motor features include pressure cast aluminum end plates with ribbed design for rigidity, heavy gauge steel frame, 230 volt, with inverter spike resistance magnet wire

WARNING! DO NOT RUN PUMP DRY, RESTRICT OR REDUCE PORT SIZES OR DEAD HEAD PUMP

WARNING! DO NOT USE WITH FLAMMABLE LIQUIDS

2" CAST IRON PUMPS W/ELECTRIC MOTORS			
PART NO	DESCRIPTION	HP	QTY
234PIE5	2" CAST IRON PUMP W/5 HP THREE PHASE ELECTRIC MOTOR	5	1
234PIE51	2" CAST IRON PUMP W/5 HP SINGLE PHASE ELECTRIC MOTOR	5	1

2" CAST IRON PUMP ONLY			
PART NO	DESCRIPTION	HP	QTY
234POI	2" CAST IRON PUMP ONLY W 184TC FRAME ADAPTER	N/A	1

2" CAST IRON PUMPS WITH ELECTRIC MOTORS

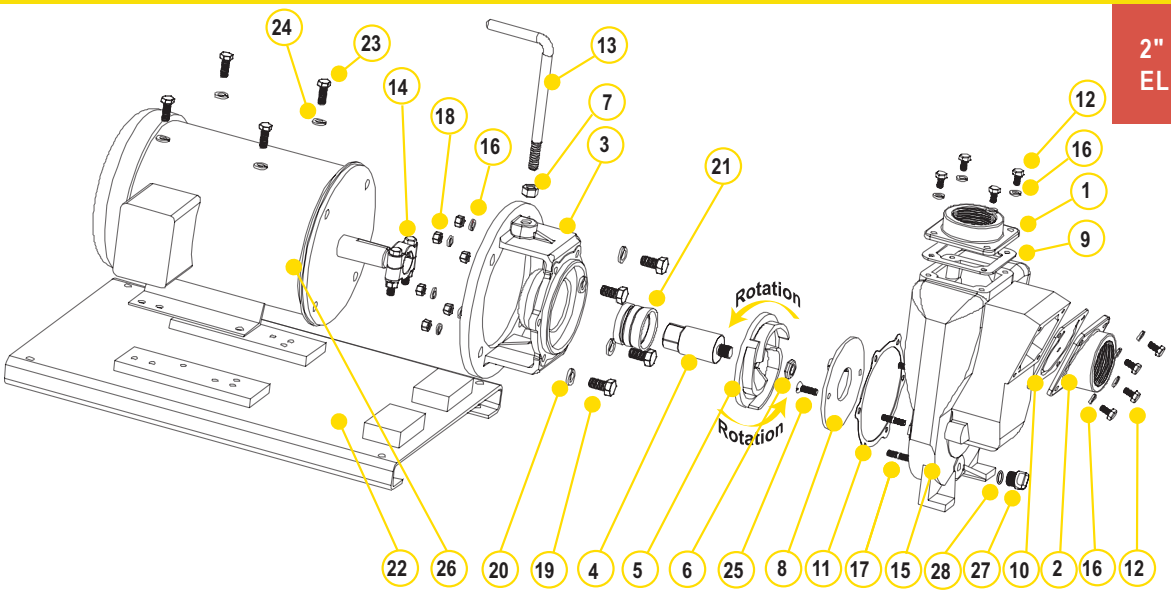

REPLACEMENT PARTS 2" CAST IRON PUMPS

ITEM	PART NO	DESCRIPTION	QTY
1	17000	2" NPT OUTLET FLANGE	1
2	17002	2" NPT INLET FLANGE	1
3	17046	C-FACE ADAPTER (234PIE3)	1
3	17446	C-FACE ADAPTER	1
4	17007	IMPELLER SHAFT (234PIE3)	1
4	17406	IMPELLER SHAFT	1
5	17008	IMPELLER (234PIE3)	1
5	17408	IMPELLER	1
6	17009B	5/8" IMPELLER NUT	1
7	17010	1/2" HEX NUT	1
8	17011	WEAR PLATE	1
9	17013	OUTLET GASKET	1
10	17016	GASKET & CHECK VALVE	1
11	17018	GASKET ADAPTER	1
12	17019	BOLT	8
13	15022	HANDLE	1
14	17024	CLAMP ASSEMBLY W/KEY (234PIE3)	1
14	18129	CLAMP ASSEMBLY W/KEY	1
15	17026	PUMP HOUSING	1
16	V10118	5/16" LOCK WASHER	20
17	17042	HOUSING STUD	6
18	V10119	HEX NUT	8
19	N/A	BOLT	4
20	N/A	WASHER	4
21	17035	SEAL ASSEMBLY (234PIE3)	1
21	18025	SEAL ASSEMBLY	1
22	17701	BASE PLATE ASSEMBLY	1
23	17704	BOLT	4
24	V20018	3/8" LOCK WASHER	4
25	17130	5/16-18 X 1.00" FHSCS, 18-8 SS	2
26	N/A	ELECTRIC MOTOR	1
27	12777	1/2" PLUG	1
28	UV15163	O-RING FOR DRAIN PLUG	1

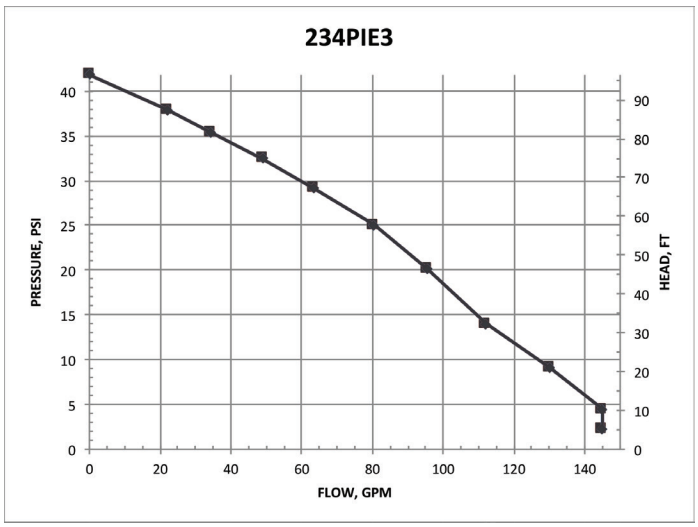

2" CAST IRON PUMPS WITH HYDRAULIC MOTORS

FEATURES

- Cast iron construction for rugged dependable service
- Stainless steel hardware
- Replaceable inlet and outlet flanges
- Dynamically balanced impeller
- Hydraulic fluid capacity is minimum 6 gallons and maximum 10 gallons
- Open or closed system
- 12 HP motor
- Recommendation to use the motor spool control valve or a suitable equivalent. The lack of such a valve in this circuit may cause failure to the hydraulic motor.

2" CAST IRON PUMPS WITH HYDRAULIC MOTOR			
PART NO	DESCRIPTION	HP	QTY
200PIHY	2" CAST IRON PUMP ONLY WITH HYDRAULIC MOTOR	12	1

SPOOL VALVE ASSEMBLY DIAGRAM

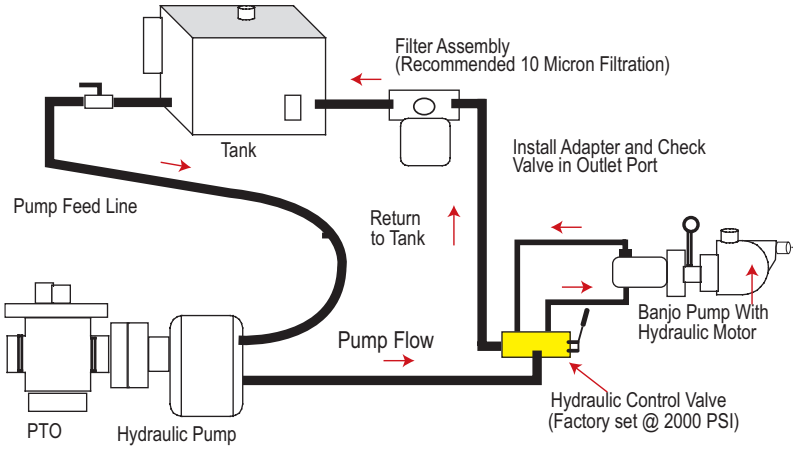

WARNING! DO NOT RUN PUMP DRY, RESTRICT OR REDUCE PORT SIZES OR DEAD HEAD PUMP

WARNING! DO NOT USE WITH FLAMMABLE LIQUIDS

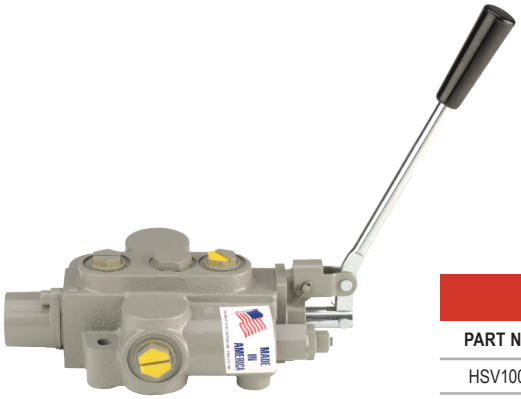

HYDRAULIC MOTOR SPOOL VALVE			
PART NO	DESCRIPTION	HP	QTY
HSV1000	HYDRAULIC MOTOR SPOOL VALVE	N/A	1

BANJO Liquid Handling Products

2" CAST IRON PUMPS WITH HYDRAULIC MOTORS

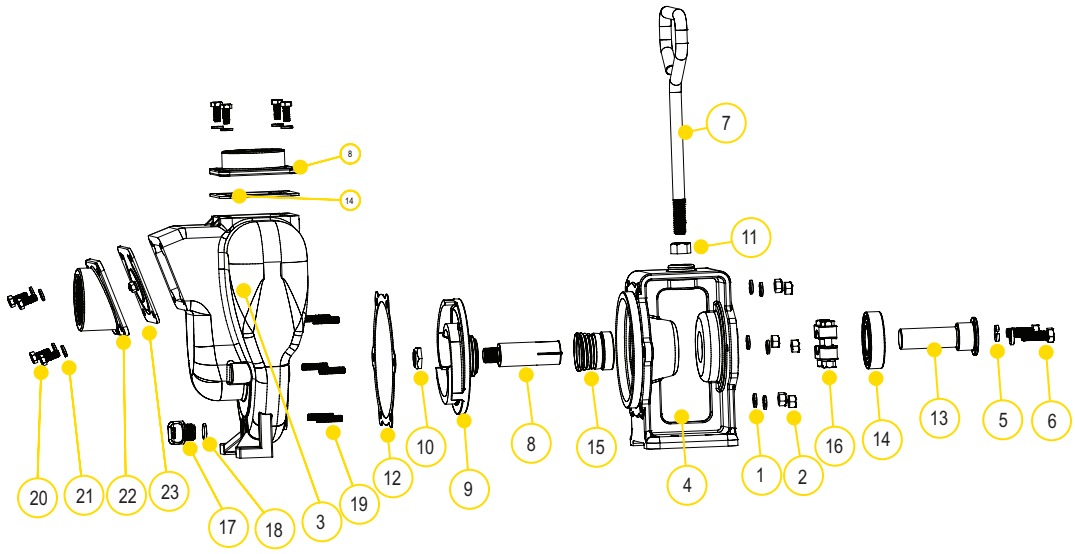

REPLACEMENT PARTS 2" CAST IRON PUMPS

ITEM	PART NO	DESCRIPTION	QTY
1	V10118	5/16" SPLIT LOCK WASHER	6
2	V10119	5/16"-18 HEX NUT	6
3	17026	PUMP HOUSING	1
4	N/A	HYDRAULIC ADAPTER	1
5	V20018	3/8" LOCK WASHER	2
6	18010SS	3/8"-16 X 1.25" HHCS	2
7	15022	HANDLE	1
8	17007	7/8" SLEEVE DRIVE FOR HYDRAULIC MOTOR	1
9	17008	5" IMPELLER	1
10	17009B	5/8" IMPELLER NUT	1
11	17010	1/2" HEX NUT - 13UNF-RH	1
12	17018	GASKET ADAPTER	1
13	17055A	HYDRAULIC ADAPTER SHAFT	1
14	17056	SKF 6206-2RS1 BEARING	1
15	17035	FKM SEAL ASSEMBLY	1
16	17024	7/8" CLAMP, NO KEY	1
17	12777	1/2" PLUG	1
18	UV15163	O-RING	1

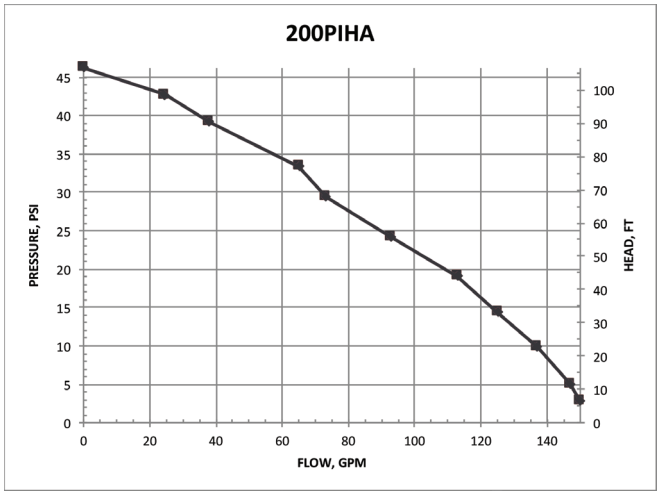

2" 222 SERIES CAST IRON PUMPS

FEATURES

- Cast iron construction for rugged dependable service
- Carbon ceramic seal with stainless steel cup and spring with FKM rubber
- Replaceable inlet and outlet flanges
- Dynamically balanced impeller
- Heavy duty slinger seal on motor shaft
- Large weep holes between pump end and engine
- Pump only packs complete and ready for attachment to gasoline engine
- Pedestal pump for long coupling to electric motor
- Recommendation for ¾" shaft: 5 HP, 3600 RPM
- Due to weight and size of pumps, Banjo ships these by truck only.
- Engine warranty service available at authorized dealers

POWERED by HONDA

222 SERIES CAST IRON PUMPS W/GAS ENGINES

PART NO	DESCRIPTION	HP	QTY
222PIH5	2" CAST IRON PUMP W/5.5 HP HONDA® ENGINE	5.5	1
222PIH6	2" CAST IRON PUMP W/6.5 HP HONDA® ENGINE	6.5	1
222PIH5E	2" CAST IRON PUMP W/5.5 HP HONDA® ENGINE W/ ELECTRIC START	5.5	1
222PI6PRO	2" CAST IRON PUMP W/6.5 HP BRIGGS & STRATTON® ENGINE PRO SERIES	6.5	1

222 SERIES CAST IRON PUMP ONLYS

PART NO	DESCRIPTION	HP	QTY
222POI	2" CAST IRON PUMP ONLY W/ FULL IMPELLER	N/A	1

222 SERIES CAST IRON BEARING PEDESTAL

PART NO	DESCRIPTION	HP	QTY
222PBI	2" CAST IRON BEARING PEDESTAL W/ ¾" STRAIGHT KEYED SHAFT	N/A	1

WARNING! DO NOT RUN PUMP DRY, RESTRICT OR REDUCE PORT SIZES OR DEAD HEAD PUMP

WARNING! DO NOT USE WITH FLAMMABLE LIQUIDS

2" 222 SERIES CAST IRON PUMPS

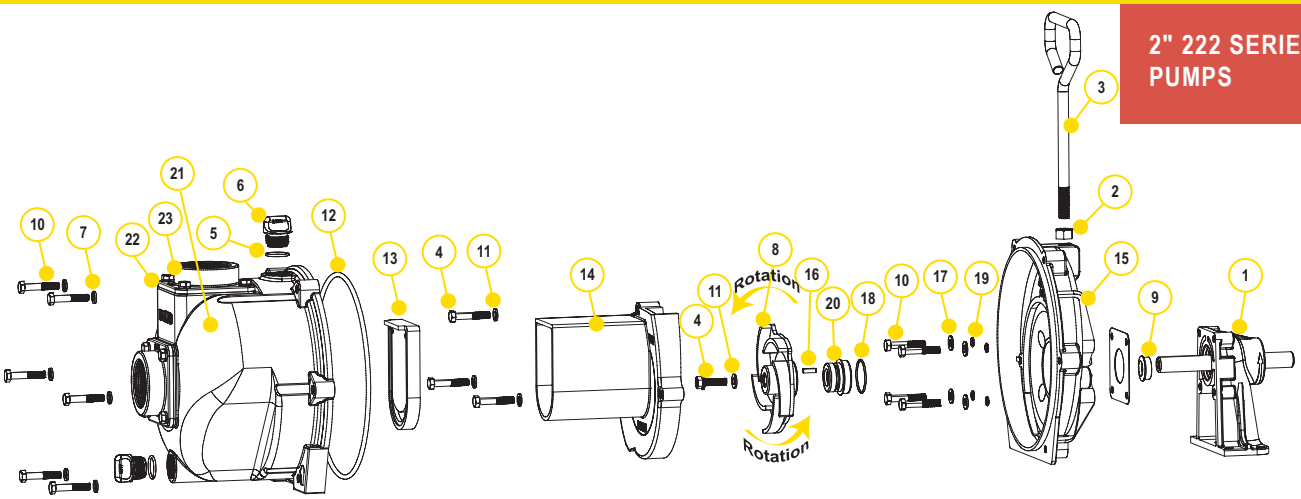

REPLACEMENT PARTS 2" CAST IRON PUMPS

ITEM	PART NO	DESCRIPTION	QTY
1	12882A	BEARING PEDESTAL ASSEMBLY	1
1	12600B	HYDRAULIC PEDESTAL ASSEMBLY	1
2	17010	½" JAM NUT	1
3	15022	HANDLE	1
4	12765A	5/16" - 24 X 1.12 IMPELLER BOLT	1
5	13778	O-RING	2
6	13777	¾" PLUG	2
7	V10118	5/16" LOCK WASHER	9
8	15772	5 VANE IMPELLER	1
9	12716	PUMP SLINGER	1
10	12715A	5/16" - 24 X 1.75 HHCS	13
11	A204	O-RING	1
12	12719A	BODY O-RING	1
13	12705	CHECK VALVE	1
14	15702	VOLUTE	1
15	15703	REAR BRACKET	1
16	12902A	3/16" SQ X 5/8" KEY	1
17	12901	5/16" FLAT WASHER	4
18	12710	O-RING	1
19	12717	O-RING	4
20	12713V	SEAL ASSEMBLY	1
20	N/A	SEVERE DUTY SEAL	1
21	15712	BODY	1
22	17013	FLANGE GASKET	2
23	17000	2" NPT THREADED FLANGE	2
24	17019	5/16" - 18 X 0.75 HHCS	8
25	V10118	5/16" LOCK WASHER	8
N/S	12099	7/16"-14 X 1.25" HHCS	1
N/S	15751	BRACKET SHIM	1
N/S	15752	IMPELLER SHIM	1
N/S	17033	Z-RAILS	1 PAIR
N/S	N/A	5/16" - 18 X 1¾" ZINC PLATED	4
N/S	V10119	5/16" -18 HEX NUT	4
N/S	V10118	5/16" LOCK WASHER	4
N/S	15000	REPAIR KIT (ITEMS 5, 8, 11-12, 18-20, 12099, 15751 & 15752)	1
N/S	15000V	FKM REPAIR KIT	1
N/S	15999	SEAL KIT (ITEMS 5, 11-12, 18-20, 12099, 15751 & 15752)	1
N/S	15999V	FKM SEAL KIT	1

KITS 222 CAST IRON PUMPS

PART NO	EPDM REPAIR KIT NO	FKM REPAIR KIT NO	EPDM SEAL KIT NO	FKM SEAL KIT NO
222PIH5	15000	15000V	15999	15999V
222PIH6	15000	15000V	15999	15999V
222PIH5E	15000	15000V	15999	15999V
222PI6PRO	15000	15000V	15999	15999V
222POI	15000	15000V	15999	15999V
222PBI	15000	15000V	15999	15999V

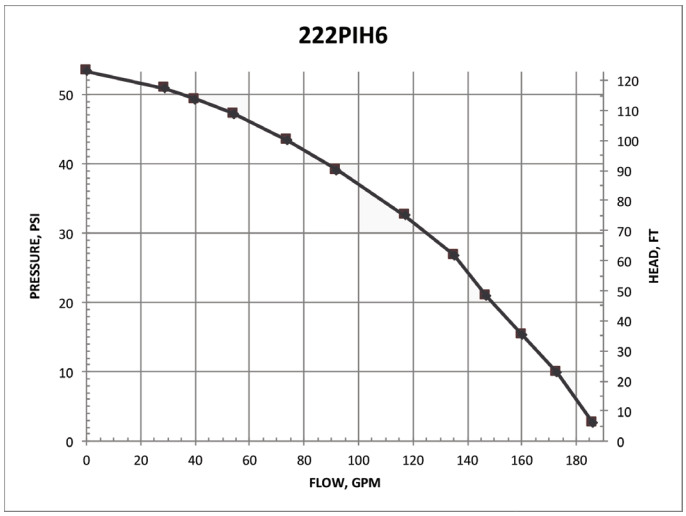

2" 222 SERIES CAST IRON PUMPS WITH ELECTRIC MOTORS

FEATURES

- Cast iron construction for rugged dependable service
- Carbon ceramic seal with stainless steel cup and spring with FKM rubber
- Replaceable inlet and outlet flanges
- Dynamically balanced impeller
- Heavy duty slinger seal on motor shaft
- Large weep holes between pump end and engine
- Motor features include pressure cast aluminum end plates with ribbed design for rigidity, heavy gauge steel frame, 230 volt, with inverter spike resistance magnet wire
- Due to weight and size of pumps, Banjo ships these by truck only.

WARNING! DO NOT RUN PUMP DRY, RESTRICT OR REDUCE PORT SIZES OR DEAD HEAD PUMP

WARNING! DO NOT USE WITH FLAMMABLE LIQUIDS

222 SERIES CAST IRON PUMPS W/ELECTRIC MOTORS

PART NO	DESCRIPTION	HP	QTY
222PIE5	2" CAST IRON PUMP W/5 HP THREE PHASE ELECTRIC MOTOR	5	1
222PIE51	2" CAST IRON PUMP W/5 HP SINGLE PHASE ELECTRIC MOTOR	5	1

2" 222 SERIES CAST IRON PUMPS WITH ELECTRIC MOTORS

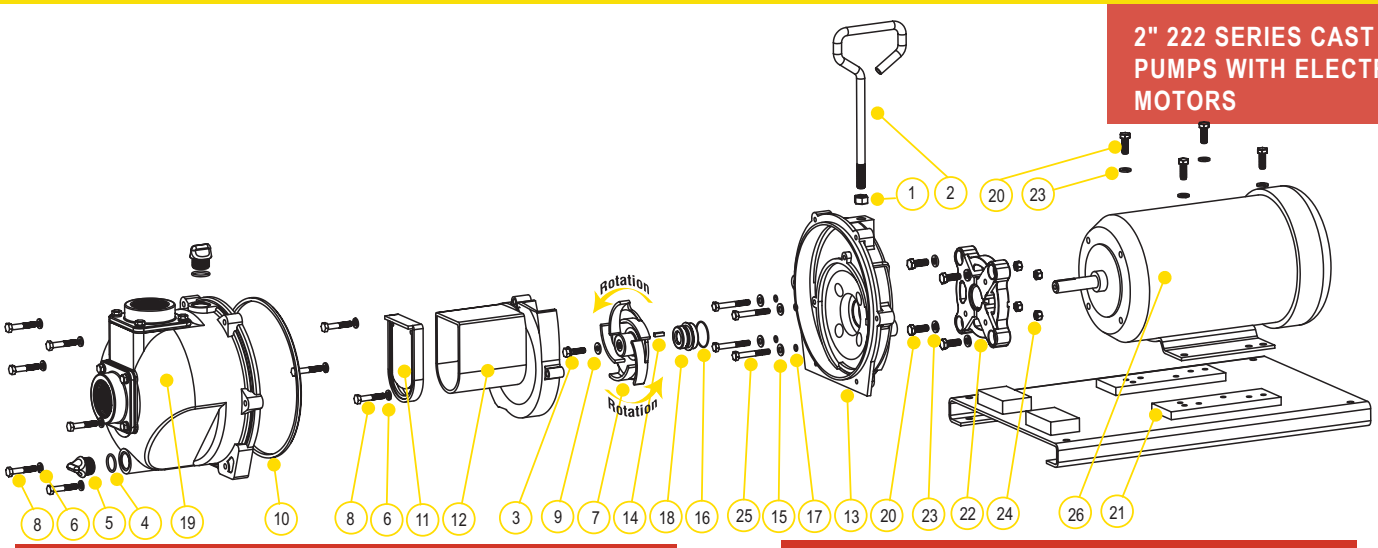

REPLACEMENT PARTS 222 SERIES CAST IRON PUMPS

ITEM	PART NO	DESCRIPTION	QTY
1	17010	½" JAM NUT	1
2	15022	HANDLE	1
3	12765A	5/16" - 24 X 1.12 IMPELLER BOLT	1
4	13778	O-RING	2
5	13777	¾" PLUG	2
6	V10118	5/16" LOCK WASHER	9
7	15772	5 VANE IMPELLER	1
8	12715A	5/16" - 24 X 1.75 HHCS	13
9	A204	O-RING	1
10	12719A	BODY O-RING	1
11	12705	CHECK VALVE	1
12	15702	VOLUTE	1
13	15703	REAR BRACKET	1
14	12902A	3/16" SQ. X 5/8" KEY	1
15	12901	5/16" FLAT WASHER	1
16	12710	O-RING	4
17	12717	O-RING	1
18	12713V	SEAL ASSEMBLY	4
18	N/A	SEVERE DUTY SEAL	1
19	15712	BODY	1
20	17704	3/16" - 16 X 1.25 HHCS BOLT	8
21	17701	C-FACED BASE PLATE	1
22	12046	56C ADAPTER	1
23	V20018	3/8" LOCK WASHER	8
24	V20019	3/8" 16 SS HEX NUT	4
25	N/A	5/16" - 18 X 2¼" HHCS BOLT	4
26	BEM5-182CZ	5 HP 3450 RPM THREE PHASE MOTOR	1
26	N/A	5 HP 3450 RPM SINGLE PHASE MOTOR	1
N/S	12099	7/16"-14 X 1.25" HHCS	1
N/S	15751	BRACKET SHIM	1
N/S	15752	IMPELLER SHIM	1
N/S	12756	ADAPTER KIT (ITEMS 14, 20, 22, 23, 12052, 12053, 15751, 15752, 17029)	1
N/S	15000	REPAIR KIT (ITEMS 4,7,9-11,14,16-18,12099,15751 & 15752)	1
N/S	15000V	FKM REPAIR KIT	1
N/S	15999	SEAL KIT (ITEMS 4, 9-11, 14,16-18,12099,15751 & 15752)	1
N/S	15999V	FKM SEAL KIT	1

KITS 222 CAST IRON PUMPS

PART NO	EPDM REPAIR KIT NO	FKM REPAIR KIT NO	EPDM SEAL KIT NO	ADAPTER KIT NO
222PIE5	15000	15000V	15999	12756
222PIE51	15000	15000V	15999	12756

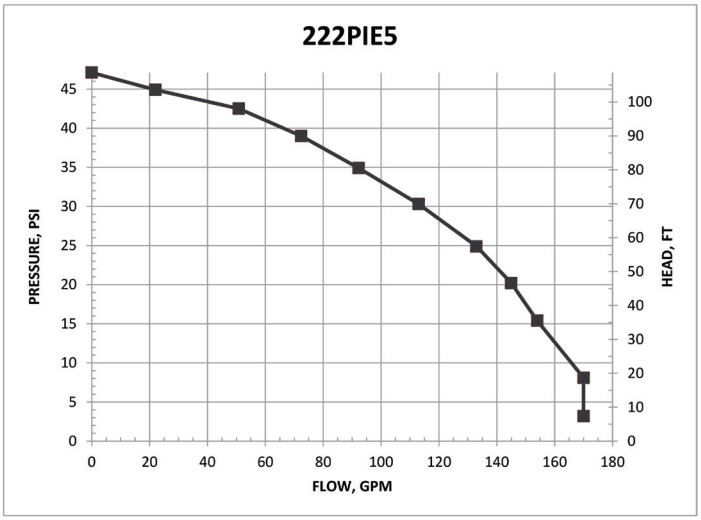

3" CAST IRON PUMPS

FEATURES

- Cast iron construction for rugged dependable service
- Stainless steel shaft sleeve to protect engine shaft
- Carbon ceramic seal with stainless steel cup and spring with FKM rubber
- Replaceable inlet and outlet flanges
- Dynamically balanced impeller
- Pump only packs complete and ready for attachment to gasoline engine
- Bearing pedestal pump for long coupling to electric motor
- Recommendation for 1" shaft: 184TC frame size, 7½ HP, 3450 RPM for close coupling to electric motors
- Engine warranty service available at authorized dealers
- Due to weight and size of pumps, Banjo ships these by truck only.

WARNING! DO NOT RUN PUMP DRY, RESTRICT OR REDUCE PORT SIZES OR DEAD HEAD PUMP

WARNING! DO NOT USE WITH FLAMMABLE LIQUIDS

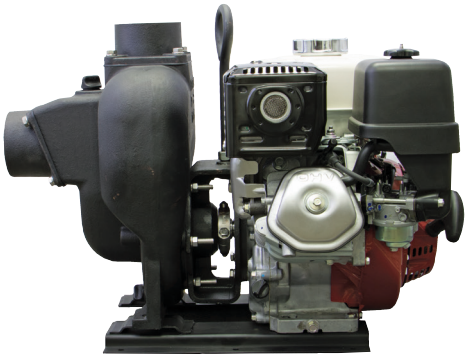

3" CAST IRON PUMP W/GAS ENGINES			
PART NO	DESCRIPTION	HP	QTY
300PIH-8	3" CAST IRON PUMP W/8 HP HONDA® ENGINE W/ELECTRIC START & PULL ROPE	8	1
300PIH13	3" CAST IRON PUMP W/13 HP HONDA® ENGINE W/ELECTRIC START & PULL ROPE	13	1

3" CAST IRON PUMP ONLY			
PART NO	DESCRIPTION	HP	QTY
300POI	3" CAST IRON PUMP ONLY W/ 1" SHAFT SLEEVE	N/A	1

3" CAST IRON BEARING PEDESTAL			
PART NO	DESCRIPTION	HP	QTY
300PBI	3" CAST IRON BEARING PEDESTAL W/ 1" STRAIGHT SHAFT	N/A	1

3" CAST IRON PUMPS

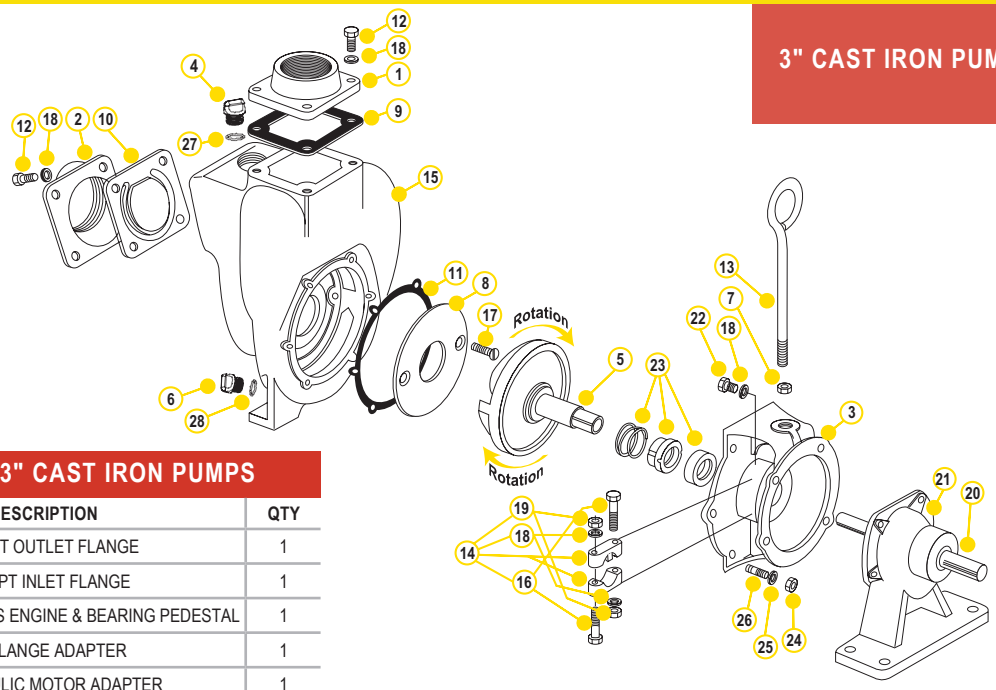

REPLACEMENT PARTS 3" CAST IRON PUMPS

ITEM	PART NO	DESCRIPTION	QTY
1	18008	3" NPT OUTLET FLANGE	1
2	18012	3" NPT INLET FLANGE	1
3	18026	ADAPTER FOR GAS ENGINE & BEARING PEDESTAL	1
3	18048	C-FLANGE ADAPTER	1
3	18049	HYDRAULIC MOTOR ADAPTER	1
N/S	18055	HYDRAULIC ADAPTER SHAFT	1
4	13777	¾" PLUG	1
5*	18023SS	1" IMPELLER & DRIVE SHAFT FOR GAS ENGINE	1
5	18023-1.125	1⅛" IMPELLER & DRIVE SHAFT FOR ELECTRIC MOTOR	1
6	12777	½" PLUG	1
7	18034	⅝" SS JAM NUT	1
8	18004	WEAR PLATE	1
9	18009	EPDM OUTLET GASKET	1
10	18013	GASKET CHECK VALVE ASSEMBLY	1
11	18021	ADAPTER GASKET	1
12	18010SS	⅜" - 16 X 1⅛" SS CAP SCREW HXHD	8
13	18033	HANDLE	1
14	18029	CLAMP ASSEMBLY (OLD STYLE)	1
14	18129	CLAMP ASSEMBLY (NEW STYLE)	1
15	18001	PUMP HOUSING	1
16	N/A	⅜" -24 X 2¼" BOLT	2
17	18106	WEAR PLATE FLAT HEAD SCREW	2
18	V20018	⅜" LOCK WASHER	8
19	N/A	⅜" X 24 SS HEX NUT	2
20	18504	1" SHAFT	1
21	18500	BEARING PEDESTAL	1
N/S	18502	BEARING SKF 66306-2RS1/C3	2
22	17704	BOLT	4
23*	18025	FKM SEAL ASSEMBLY	1
23	18025SD	SEVERE DUTY SEAL	1
24	V20019	⅜" 16 SS HEX NUT	6
25	V20018	⅜" SS LOCK WASHER	6
26	18218	⅜" -16 X 24 X 2⅛" SS STUD	6
27	13778	O-RING	1
28	UV15163	O-RING	1
N/S	18035	Z-RAIL MOUNTING BRACKET (PAIR)	1
N/S	18100	REPAIR KIT (CONSIST OF ITEMS 5*, 8,11,17, 23*)	1

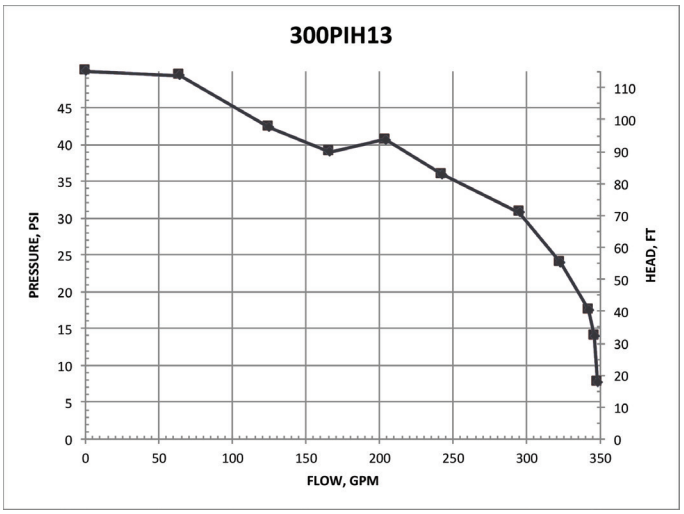

3" CAST IRON WET SEAL PUMPS

FEATURES

- Cast iron construction for rugged dependable service
- Run dry capability
- Stainless steel hardware
- Double seal contained in ethylene glycol reservoir
- Replaceable inlet and outlet flanges
- Dynamically balanced impeller
- Pump only packs complete and ready for attachment to gasoline engine
- Pedestal pump for long coupling to electric motor
- Due to weight and size of pumps, Banjo ships these by truck only.

WARNING! DO NOT USE WITH FLAMMABLE LIQUIDS

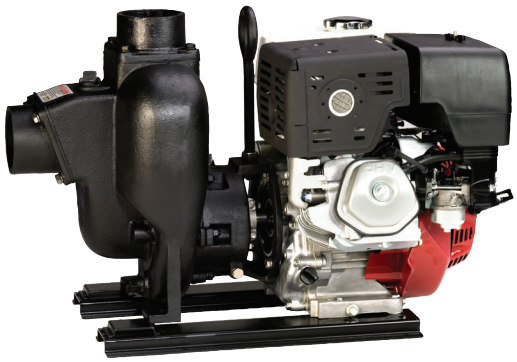

3" CAST IRON WET SEAL PUMPS W/GAS ENGINES

PART NO	DESCRIPTION	HP	QTY
301PIH13W	3" CAST IRON WET SEAL PUMP W/13 HP HONDA® ENGINE W/ ELECTRIC START & PULL ROPE	13	1

3" CAST IRON WET SEAL PUMP ONLY

PART NO	DESCRIPTION	HP	QTY
301POIW	3" CAST IRON WET SEAL PUMP ONLY	N/A	1

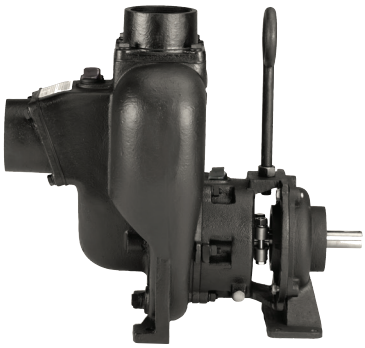

3" CAST IRON WET SEAL PUMP BEARING PEDESTAL

PART NO	DESCRIPTION	HP	QTY
301PBIW	3" CAST IRON WET SEAL PUMP WITH BEARING PEDESTAL	N/A	1

3" CAST IRON WET SEAL PUMPS

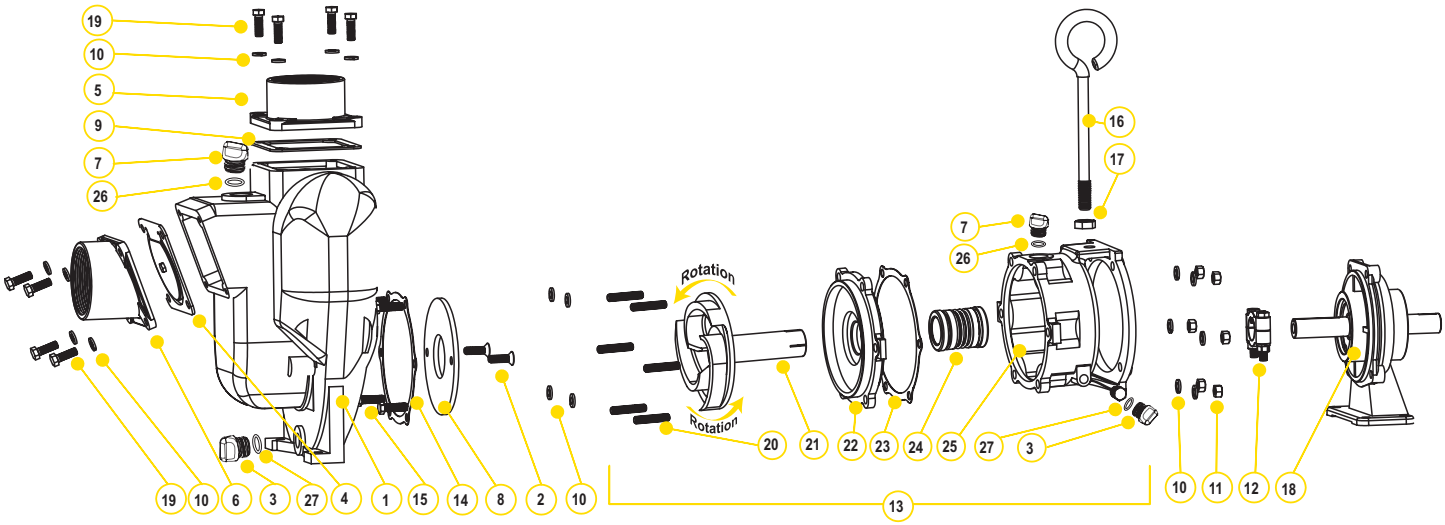

REPLACEMENT PARTS 3" CAST IRON PUMPS

ITEM	PART NO	DESCRIPTION	QTY
1	18001	PUMP HOUSING	1
2	18106	FLAT HEAD SOCKET CAP SCREW	2
3	12777	½" PLUG	2
4	18013	INLET/CHECK EPDM GASKET	1
5	18008	3" NPT OUTLET FLANGE	1
6	18012	3" NPT INLET FLANGE	1
7	13777	¾" PLUG	2
8	18004	WEAR PLATE	1
9	18009	EPDM OUTLET GASKET	1
10	V20018	⅜" LOCK WASHER	18
11	V20019	⅜" 16 SS HEX NUT	6
12	18129	CLAMP ASSEMBLY KEYED	1
13	18200A	WET SEAL ASSEMBLY	1
14	18021	ADAPTER GASKET	1
15	17704	⅜" -16 X 1¼" HHCS	4
16	18033	HANDLE	1
17	18034	⅝" -11 JAM NUT	1
18	18500	BEARING PEDESTAL	1
19	18010SS	⅜" - 16 X 1⅛" HHCS	8
20	18218	⅜" -16 X 24 X 2⅛" SS STUD	6
21	18206	IMPELLER	1
22	18202A	COVER PLATE	1
23	18021	ADAPTER GASKET	1
24	15035E	EPDM MECHANICAL SEAL ASSEMBLY	1
25	18203A	WET SEAL RESERVOIR	1
26	13778	O-RING	2
27	UV15163	O-RING	2

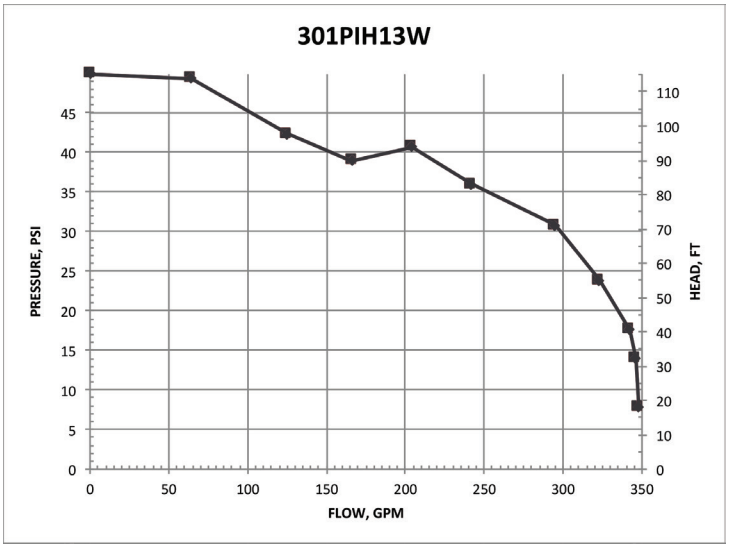

3" CAST IRON PUMPS WITH HYDRAULIC MOTORS

FEATURES

- Cast iron construction for rugged dependable service
- Stainless steel hardware
- Replaceable inlet and outlet flanges
- Dynamically balanced impeller
- Hydraulic fluid capacity is minimum 9 gallons and maximum 13 gallons
- Open or closed system
- 21 HP motor
- Recommendation to use the motor spool control valve or a suitable equivalent. The lack of such a valve in this circuit may cause failure to the hydraulic motor.

3" CAST IRON PUMPS W/ HYDRAULIC MOTORS			
PART NO	DESCRIPTION	HP	QTY
300PIHY	3" CAST IRON PUMP W/ 21 HP HYDRAULIC MOTOR	21	1

SPOOL VALVE ASSEMBLY DIAGRAM

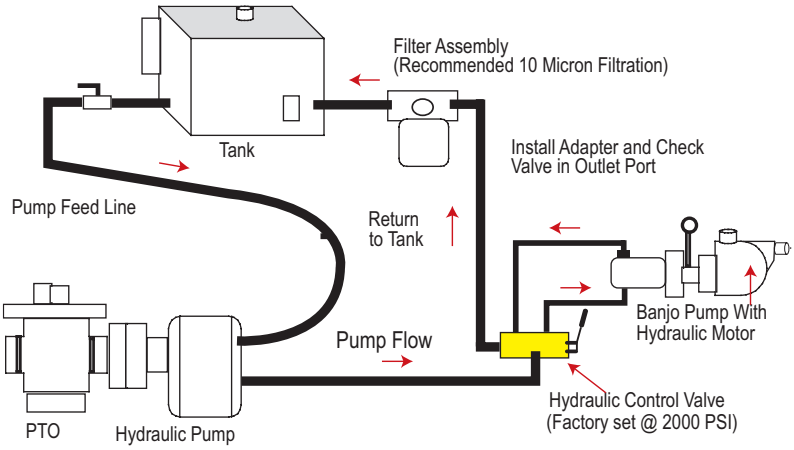

WARNING! DO NOT RUN PUMP DRY, RESTRICT OR REDUCE PORT SIZES OR DEAD HEAD PUMP

WARNING! DO NOT USE WITH FLAMMABLE LIQUIDS

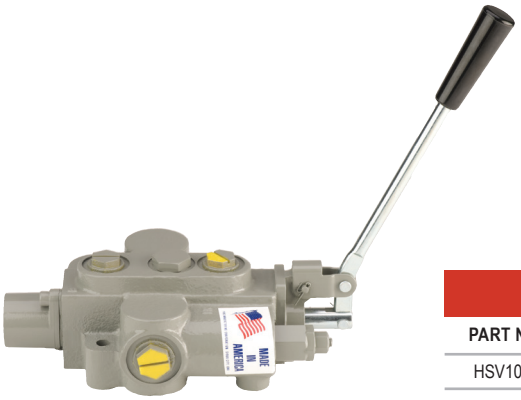

HYDRAULIC MOTOR SPOOL VALVE			
PART NO	DESCRIPTION	HP	QTY
HSV1000	HYDRAULIC MOTOR SPOOL VALVE	N/A	1

BANJO Liquid Handling Products

3" CAST IRON PUMPS WITH HYDRAULIC MOTORS

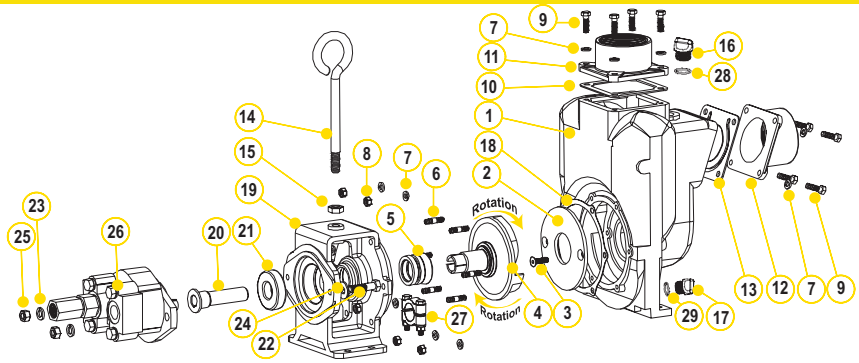

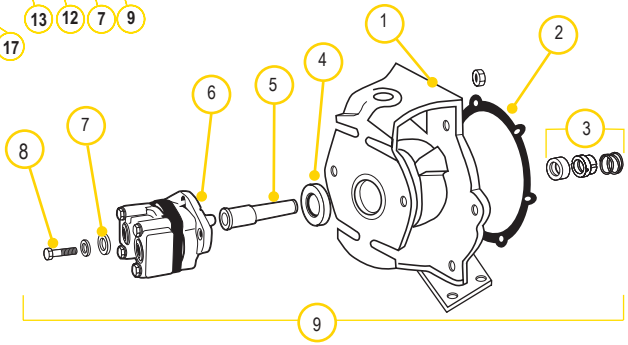

REPLACEMENT PART 3" CAST IRON PUMPS

ITEM	PART NO	DESCRIPTION	QTY
1	18001	PUMP HOUSING	1
2	18004	WEAR PLATE	1
3	18106	⅜" - 16 X 1.25" HHCS	2
4	18023SS	1" IMPELLER & DRIVE SHAFT FOR GAS ENGINE	1
5	18025	FKM MECHANICAL SEAL	1
5	18025SD	SEVERE DUTY SEAL	1
6	18218	⅜" -16 X 24 X 2⅛" SS STUD	6
7	V20018	⅜" LOCK WASHER	14
8	V20019	⅜" 16 SS HEX NUT	6
9	18010SS	⅜" - 16 X 1.25" HHCS	8
10	18009	EPDM OUTLET GASKET	1
11	18008	3" NPT OUTLET FLANGE	1
12	18012	3" NPT INLET FLANGE	1
13	18013	INLET/CHECK EPDM GASKET	1
14	18033	HANDLE	1
15	18034	⅝" -11 HEX NUT	1
16	13777	¾" PLUG	1
17	12777	½" PLUG	1
18	18021	ADAPTER GASKET	1
19	18049	HYDRAULIC MOTOR ADAPTER	1
20	18055	HYDRAULIC ADAPTER SHAFT	1
21	18502	BEARING SKF 66306-2RS1/C3	1
22	18056	½" -13 X 2" HHCS	2
23	N/A	½" SPLIT WASHER	2
24	N/A	½" FLAT WASHER	2
25	17010	½" - 13 HEX NUT	2
26	HY1012	UM16-45A-HX HYDRAULIC MOTOR ASSEMBLY	1
27	18029	CLAMP ASSEMBLY UNKEYED	1
28	13778	O-RING	1
29	UV15163	O-RING	1
KIT	18100	REPAIR KIT (CONSIST OF 2, 3, 4, 5, 18)	1

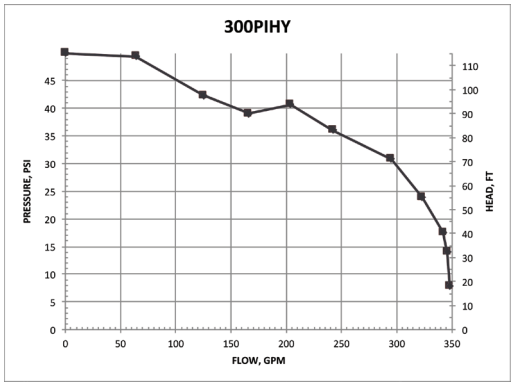

REPLACEMENT PARTS 3" HYDRAULIC ADAPTER

ITEM	PART NO	DESCRIPTION	QTY
1	18049	C-FACE HYDRAULIC MOTOR ADAPTER	1
2	18021	GASKET ADAPTER	1
3	18025	SEAL ASSEMBLY	1
4	18502	SKF 63306-2RS1/C3 BEARING	1
5	18055	HYDRAULIC ADAPTER SHAFT SLEEVE	1
6	HY1012	TYRONE® UM16 HYDRAULIC MOTOR	1
7	N/A	½" FLAT WASHER	2
8	N/A	½" SPLIT LOCK WASHER	2
9	18056	½" - 13" X 2" HHCS BOLT	2
10	17010	½" HEX NUT	2
11	18600	HYDRAULIC MOTOR ADAPTER ASSEMBLY	1
KIT	HY1001	REPAIR KIT	1

HYDRAULIC MOTOR DATA

U.S. GALLONS/REV.	0.0038
CUBIC INCHES/REV.	0.878
LITERS/REV.	0.0144
MAX HYDRAULIC PRESSURE	3000 PSI
MIN HYDRAULIC PRESSURE	600 PSI
INLET PORT	1-1/16-12UN-2B
OUTLET PORT	1-5/16-12UN-2B
MINIMUM GPM REQUIRED	9 GPM 2370 RPM
MAXIMUM GPM REQUIRED	13 GPM 3450 RPM
IDEAL GPM REQUIRED	9 GPM 3600 RPM

CONNECTION INFORMATION

INLET	"A" PORT
OUTLET	"B" PORT

SUPPLIED CHECK VALVE IS TO ENSURE PROPER ROTATION OF THE BANJO PUMP. PLACE CHECK VALVE IN OUTLET PORT (MARKED "B") FOR PROPER RIGHT HAND ROTATION. IT IS RECOMMENDED THAT A MINIMUM ¾" INLET LINE & A MINIMUM 1" OUTLET LINE BE USED. THE OUTLET PORT MUST BE CONNECTED DIRECTLY BACK TO THE HYDRAULIC FLUID RESERVOIR & NOT TO ANY VALVING, REGULATORS OR FLOW DIVERTERS. THE OUTLET PORT/RETURN LINE BACK PRESSURE MUST NOT EXCEED 250 PSI.

SPOOL VALVE INFORMATION

REQUIRED OUTLET FLOW	MIN 9 GPM / MAX 13 GPM
REQUIRED SYSTEM PRESSURE	MIN 600 PSI / MAX 3000 PSI

3" 333 SERIES CAST IRON PUMPS

FEATURES

- Cast iron construction for rugged dependable service
- Carbon ceramic seal with stainless steel cup and spring with FKM rubber
- Replaceable inlet and outlet flanges
- Dynamically balanced impeller
- Heavy duty slinger seal on motor shaft
- Large weep holes between pump end and engine
- Pedestal pump for long coupling to electric motor
- Due to weight and size of pumps, Banjo ships these by truck only.
- Engine warranty service available at authorized dealers

WARNING! DO NOT RUN PUMP DRY, RESTRICT OR REDUCE PORT SIZES OR DEAD HEAD PUMP

WARNING! DO NOT USE WITH FLAMMABLE LIQUIDS

POWERED by HONDA

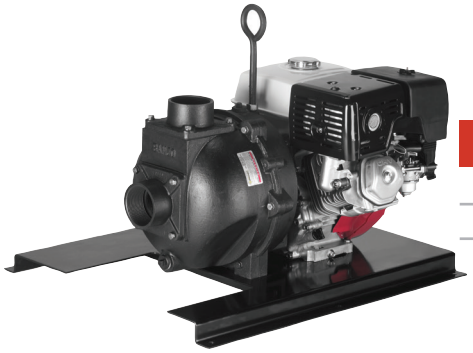

333 SERIES CAST IRON PUMPS W/GAS ENGINES

PART NO	DESCRIPTION	HP	QTY
333PIH13	3" CAST IRON PUMP W/13 HP HONDA® ENGINE W/ ELECTRIC START & PULL ROPE	13	1

333 SERIES CAST IRON PUMP ONLYS

PART NO	DESCRIPTION	HP	QTY
333POI	3" CAST IRON PUMP ONLY W/1" SHAFT & 5 VANE IMPELLER UNASSEMBLED	N/A	1

333 SERIES CAST IRON BEARING PEDESTAL

PART NO	DESCRIPTION	HP	QTY
333PBI	3" CAST IRON BEARING PEDESTAL W/ 1" SHAFT	N/A	1

333 SERIES CAST IRON HYDRAULIC PUMPS

PART NO	DESCRIPTION	HP	QTY
333PIE15	3" CAST IRON PUMP W/15 HP THREE PHASE ELECTRIC MOTOR	15	1

3" 333 SERIES CAST IRON PUMPS

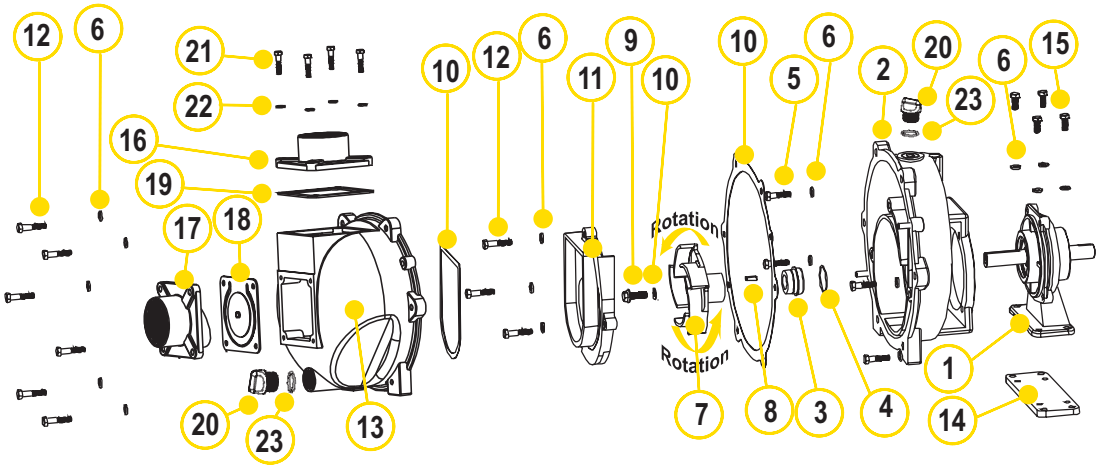

REPLACEMENT PARTS 3" CAST IRON PUMPS

ITEM	PART NO	DESCRIPTION	QTY
N/S	16099	IMPELLER REMOVAL BOLT	1
1	18500	BEARING PEDESTAL (333PBI)	1
2	16704	REAR BRACKET	1
3	16713	MECHANICAL SEAL	1
4	16710	O-RING	1
5	17704	3/8" - 16 X 1.25" SS CAP SCREW (333PBI)	4
6	V20018	3/8" SS LOCK WASHER	17
7	16773	3" IMPELLER (333PBI)	1
7	16774	3" IMPELLER (333PIH13 & 333POI)	1
7	16774A	3" IMPELLER (333PIE15)	1
8	16901	1/4" SQ. 3/4" KEY STOCK	1
9	16765	IMPELLER BOLT (333PBI)	1
9	13765	IMPELLER BOLT (333PPIH13)	1
10	16019	GASKET SET	1
11	16702	VOLUTE	1
12	N/A	3/8" - 16 X 1.75" SS BOLT	9
13	16733	BODY	1
14	18511	ADAPTER PLATE (333PBI)	1
15	18512	3/8" - 16 X 0.875" SS HHCS (333PBI)	4
N/S	16751	BRACKET SHIM SET	1
N/S	16752	IMPELLER SHIM	1
N/S	18033	HANDLE	1
N/S	18034	5/8" SS JAM NUT	1
16	16001	3" NPT OUTLET FLANGE	1
17	16003	3" NPT INLET FLANGE	1
18	16706	FKM INLET GASKET W/ CHECK	1
19	16011	FKM OUTLET GASKET	1
20	13777	3/4" PLUG	2
21	18027	3/8" - 16 X 1.50" HHCS (333PIH13)	8
22	V20018	3/8" SS LOCK WASHER	8
23	13778	O-RING	2

REPLACEMENT PARTS 333PIE15

ITEM	PART NO	DESCRIPTION	QTY
N/S	16099	IMPELLER REMOVAL BOLT	1
2	16704A	REAR BRACKET W/C-FACE ADAPTER	1
3	15025	MECHANICAL SEAL	1
6	V20018	3/8" SS LOCK WASHER	8
7	N/A	3" IMPELLER - 5 VANE	1
8	N/A	1/4" SQ. 3/4" KEY STOCK	1
9	16765	7/16-20 1 1/4" HFS	1
10	16019	GASKET SET	1
11	16702	VOLUTE	1
12	N/A	3/8" - 16 X 1.75" SS BOLT	9
13	16733	BODY	1
N/S	16751	BRACKET SHIM SET	1
N/S	16752	IMPELLER SHIM	1
N/S	18033	HANDLE	1
N/S	18034	5/8" SS JAM NUT	1
16	16001	OUTLET FLANGE	1
17	16003	INLET FLANGE	1
18	16706	FKM INLET GASKET W/ CHECK	1
19	16011	FKM OUTLET GASKET	1
20	13777	3/4" PLUG	2
21	18027	3/8" - 16 X 1.50" HHCS	8
22	V20018	3/8" SS LOCK WASHER	4
23	13778	O-RING	2

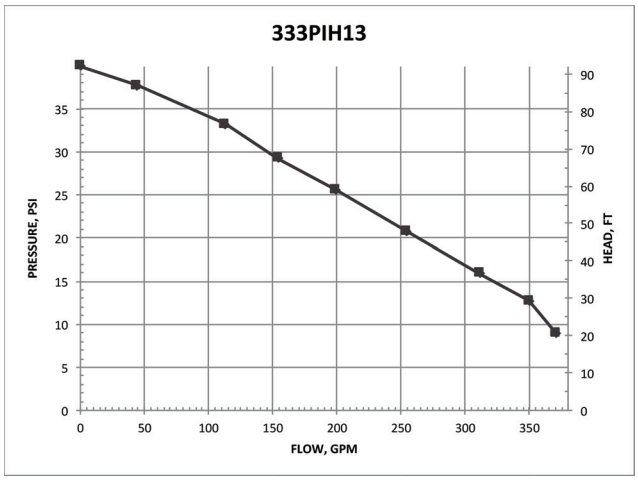

3" M332 SERIES CAST IRON MANIFOLD WET SEAL PUMPS

FEATURES

- Run dry capability
- Cast iron construction for rugged dependable service
- Carbon ceramic seal with stainless steel cup and spring with EPDM rubber
- Replaceable inlet and outlet flanges
- Dynamically balanced impeller
- Heavy duty slinger seal on motor shaft
- Due to weight and size of pumps, Banjo ships these by truck only.
- Engine warranty service available at authorized dealers
- See pages 39-45 on manifold fittings for easy plumbing.

WARNING! DO NOT USE WITH FLAMMABLE LIQUIDS

M332 SERIES CAST IRON WET SEAL PUMPS W/GAS ENGINES

PART NO	DESCRIPTION	HP	QTY
M332PIH13W	3" MANIFOLD CAST IRON WET SEAL PUMP W/13 HP HONDA® ENGINE W/ELECTRIC START & PULL ROPE	13	1

M332 SERIES CAST IRON WET SEAL PUMPS W/ELECTRIC MOTORS

PART NO	DESCRIPTION	HP	QTY
M332PIE10W	3" MANIFOLD CAST IRON WET SEAL PUMP W/10HP THREE PHASE ELECTRIC MOTOR	10	1
M332PIE101W	3" MANIFOLD CAST IRON WET SEAL PUMP W/10HP SINGLE PHASE ELECTRIC MOTOR	10	1

M332 SERIES CAST IRON WET SEAL PUMP ONLY

PART NO	DESCRIPTION	HP	QTY
M332POIW	3" MANIFOLD CAST IRON WET SEAL PUMP ONLY	N/A	1

3" M332 SERIES CAST IRON MANIFOLD WET SEAL PUMPS

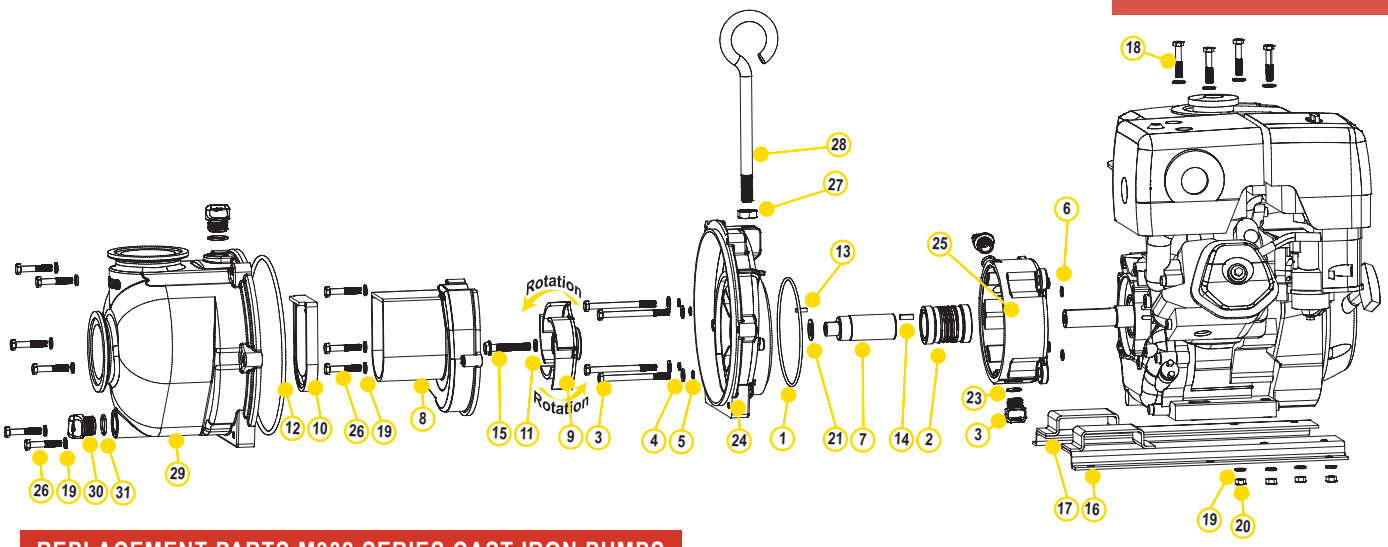

REPLACEMENT PARTS M332 SERIES CAST IRON PUMPS

ITEM	PART NO	DESCRIPTION	QTY
1	13719	O-RING	1
2	15035E	EPDM MECHANICAL SEAL ASSEMBLY	1
3	13034	5/16" - 24 X 3¾" HHCS	1
4	12901	5/16" FLAT WASHER	4
5	12717	O-RING FOR BRACKET SCREW	8
6	12709	O-RING	4
7	13055	ADAPTER SHAFT	4
8	19702	VOLUTE	1
9	19772SS	5 VANE IMPELLER	1
9	15772	IMPELLER (M332PBIW)	1
10	12705	CHECK VALVE	1
11	A204	O-RING	1
12	12719A	BODY O-RING	1
13	12902A	IMPELLER KEY	1
14	16901	¼" SQ X ¾" KEY STOCK	1
15	13766	⅜" - 24 X 2¼" HFS	1
16	N/A	Z-RAIL	1
17	N/A	Z-RAIL	1
18	N/A	5/16" - 18 X 1¾" HHCS	4
19	V10118	5/16" LOCK WASHER	13
20	V10119	5/16" HEX NUT	4
21	CV10175	GASKET	2
22	12777	½" PLUG	2
23	UV15163	O-RING	2
24	19703W	REAR BRACKET	1
25	19201W	WET SEAL RESERVOIR	1
26	12715A	5/16"- 24 X 1¾" HHCS	9
27	18034	⅝"-11 JAM NUT	1
28	18033	PUMP HANDLE	1
29	M19712X	PUMP BODY	1
30	13777	¾" PLUG	2
31	13778	O-RING	2

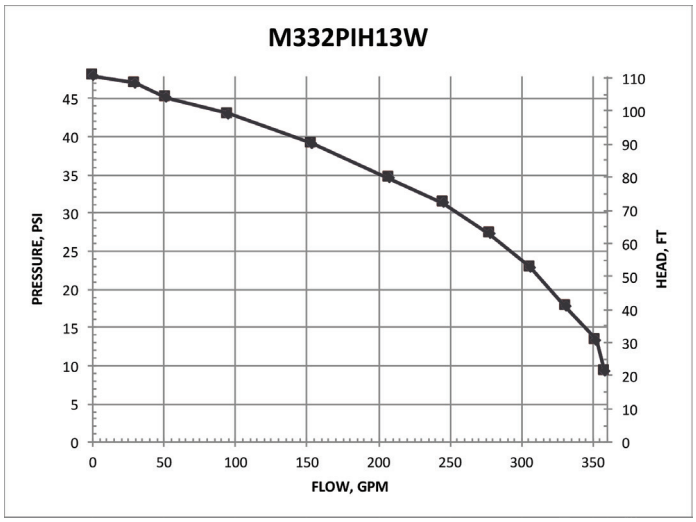

3" M332 SERIES CAST IRON MANIFOLD WET SEAL PUMPS WITH HYDRAULIC MOTORS

FEATURES

- Run dry capability
- Cast iron construction for rugged dependable service
- Carbon ceramic seal with stainless steel cup and spring with EPDM rubber
- Replaceable inlet and outlet flanges
- Dynamically balanced impeller
- Heavy duty slinger seal on motor shaft
- Hydraulic fluid capacity is minimum 9 gallons and maximum 13 gallons
- Open or closed system
- 3600 R.P.M.
- Recommendation to use the motor spool control valve or a suitable equivalent. The lack of such a valve in this circuit may cause failure to the hydraulic motor.
- See pages 39-45 on manifold fittings for easy plumbing.

WARNING! DO NOT USE WITH FLAMMABLE LIQUIDS

M332 SERIES CAST IRON MANIFOLD WET SEAL PUMPS W/WO HYDRAULIC MOTOR			
PART NO	DESCRIPTION	HP	QTY
M332PIHYW	3" MANIFOLD CAST IRON WET SEAL PUMP W/ HYDRAULIC MOTOR	21	1
M332PIHAW	3" MANIFOLD CI WET SEAL PUMP WITHOUT HYDRAULIC MOTOR	N/A	1

SPOOL VALVE ASSEMBLY DIAGRAM

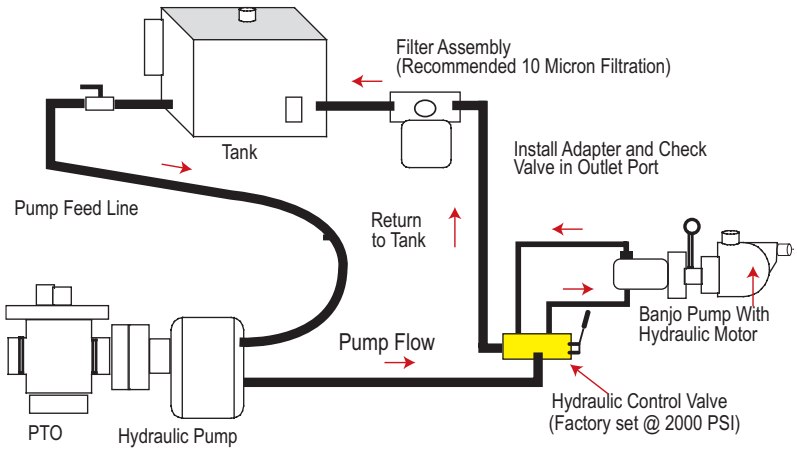

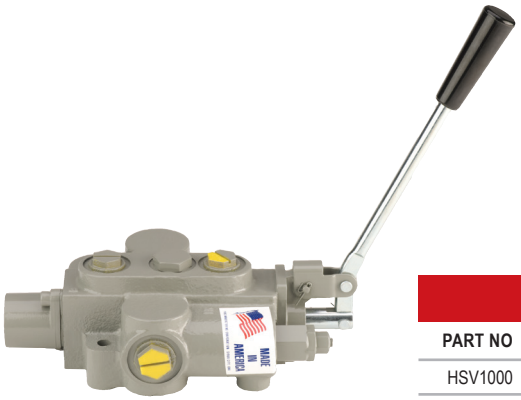

HYDRAULIC MOTOR SPOOL VALVE			
PART NO	DESCRIPTION	HP	QTY
HSV1000	HYDRAULIC MOTOR SPOOL VALVE	N/A	1

3" M332 SERIES CAST IRON MANIFOLD WET SEAL PUMPS WITH HYDRAULIC MOTORS

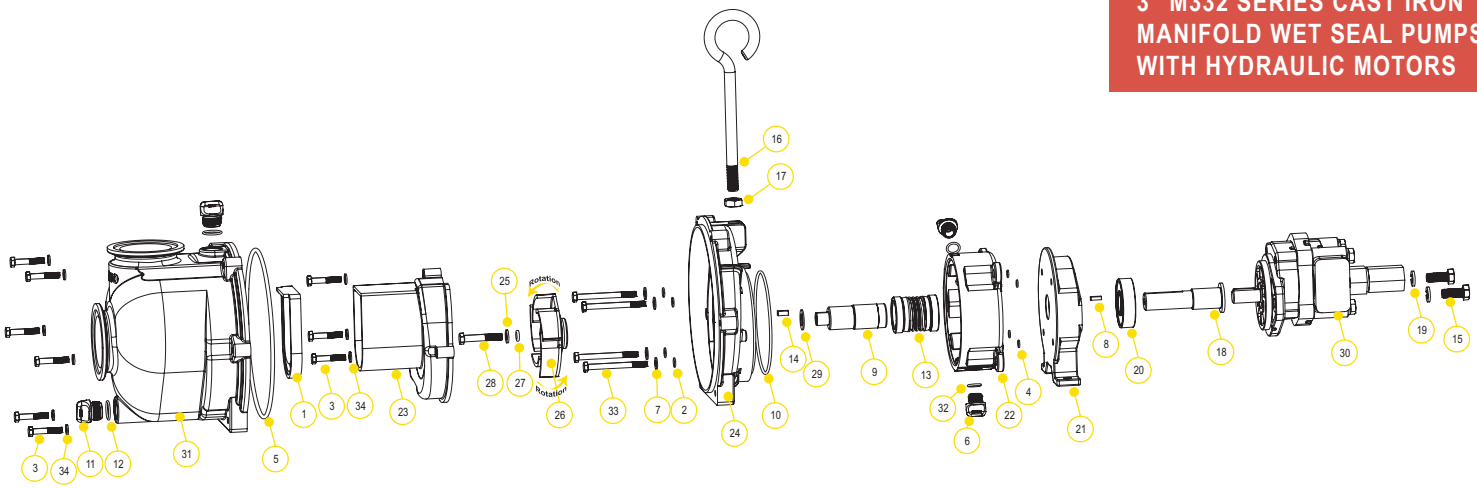

REPLACEMENT PARTS M332 SERIES CAST IRON PUMPS

ITEM	PART NO	DESCRIPTION	QTY
1	12705	CHECK VALVE	1
2	12709	O-RING	4
3	12715A	SS BRACKET SCREWS–	9
4	12717	O-RING FOR SCREW HEAD	4
5	12719A	BODY O-RING	1
6	12777	½" PLUG	2
7	12901	SS REAR BRACKET WASHER	4
8	12902A	IMPELLER KEY	1
9	13055	ADAPTER SHAFT	1
10	13719	O-RING	1
11	13777	¾" PLUG	2
12	13778	O-RING	2
13	15035E	EPDM MECHANICAL SEAL ASSEMBLY	1
14	16901	¼" SQ. ¾" KEY STOCK	1
15	N/A	BOLT	2
16	18033	HANDLE	1
17	18034	⅝" SS JAM NUT	1
18	18055H	HYDRAULIC MOTOR ADAPTER SHAFT	1
19	N/A	½" SPLIT LOCK WASHER	2
20	18502	SKF 63306-2RS1/C3 BEARING	1
21	19001H	RESERVOIR BACKING PLATE	1
22	19201W	WET SEAL RESERVOIR	1
23	19702	VOLUTE	1
24	19703W	REAR BRACKET	1
25	N/A	⅜" FLAT WASHER	1
26	19772SS	5 VANE IMPELLER	1
27	A204	O-RING	1
28	BF311	⅜" - 16 X 3" HHCS	1
29	CV10175	GASKET	1
30	HY1012	TYRONE® UM16 HYDRAULIC MOTOR	1
31	M19712X	PUMP BODY	1
32	UV15163	PRIME/DRAIN PLUG O-RING	2
33	V10118	5/16" SS LOCK WASHER	4
34	V10117	5/16" X 3½" SS BODY BOLT	9

HYDRAULIC MOTOR DATA

U.S. GALLONS/REV.	0.0038
CUBIC INCHES/REV.	0.878
LITERS/REV.	0.0144
MAX HYDRAULIC PRESSURE	3000 PSI
MIN HYDRAULIC PRESSURE	600 PSI
INLET PORT	1-1/16-12UN-2B
OUTLET PORT	1-5/16-12UN-2B
MINIMUM GPM REQUIRED	9 GPM 2370 RPM
MAXIMUM GPM REQUIRED	13 GPM 3450 RPM
IDEAL GPM REQUIRED	9 GPM 3600 RPM
CONNECTION INFORMATION	
INLET	"A" PORT
OUTLET	"B" PORT

SUPPLIED CHECK VALVE IS TO ENSURE PROPER ROTATION OF THE BANJO PUMP. PLACE CHECK VALVE IN OUTLET PORT (MARKED "B") FOR PROPER RIGHT HAND ROTATION. IT IS RECOMMENDED THAT A MINIMUM ¾" INLET LINE & A MINIMUM 1" OUTLET LINE BE USED. THE OUTLET PORT MUST BE CONNECTED DIRECTLY BACK TO THE HYDRAULIC FLUID RESERVOIR & NOT TO ANY VALVING, REGULATORS OR FLOW DIVERTERS. THE OUTLET PORT/RETURN LINE BACK PRESSURE MUST NOT EXCEED 250 PSI.

SPOOL VALVE INFORMATION	
REQUIRED OUTLET FLOW	MIN 9 GPM / MAX 13 GPM
REQUIRED SYSTEM PRESSURE	MIN 600 PSI / MAX 3000 PSI

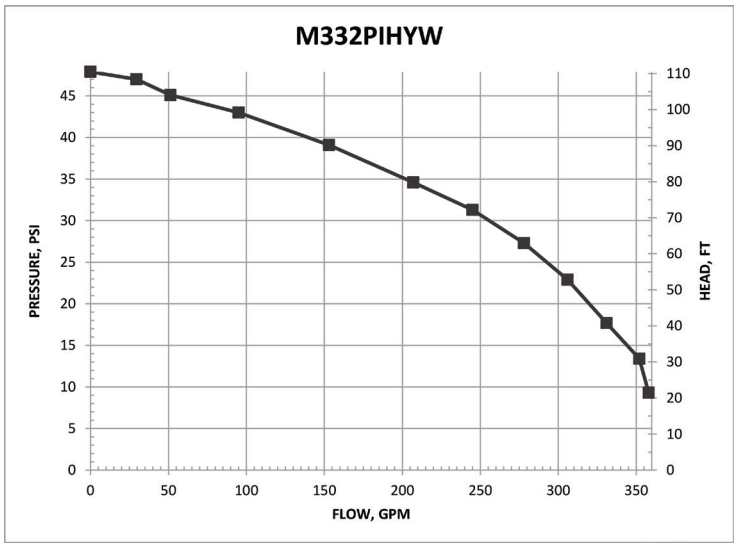

4" 444 SERIES CAST IRON PUMPS

FEATURES

- Cast iron construction for rugged dependable service
- Carbon ceramic seal with stainless steel cup and spring with FKM rubber
- Replaceable inlet and outlet flanges
- Dynamically balanced impeller
- Heavy duty slinger seal on motor shaft
- Large weep holes between pump end and engine
- Recommendation for 444POI: use with 10 pound per gallon material or more
- Due to weight and size of pumps, Banjo ships these by truck only.
- Engine warranty service available at authorized dealers

444 SERIES CAST IRON PUMPS W/GAS ENGINES

PART NO	DESCRIPTION	HP	QTY
444PIH24	4" CAST IRON PUMP W/24 HP HONDA® ENGINE	24	1

444 SERIES CAST IRON PUMP BEARING PEDESTAL

PART NO	DESCRIPTION	HP	QTY
444PBI	4" CAST IRON PUMP W/BEARING PEDESTAL W/ 1" SHAFT & 5 VANE IMPELLER	N/A	1

444 SERIES CAST IRON PUMP ONLYS

PART NO	DESCRIPTION	HP	QTY
444POI	4" CAST IRON PUMP ONLY W/ 1⅛" X 3½" SHAFT & 6 VANE IMPELLER UNASSEMBLED	N/A	1

WARNING! DO NOT RUN PUMP DRY, RESTRICT OR REDUCE PORT SIZES OR DEAD HEAD PUMP

WARNING! DO NOT USE WITH FLAMMABLE LIQUIDS

4" 444 SERIES CAST IRON PUMPS

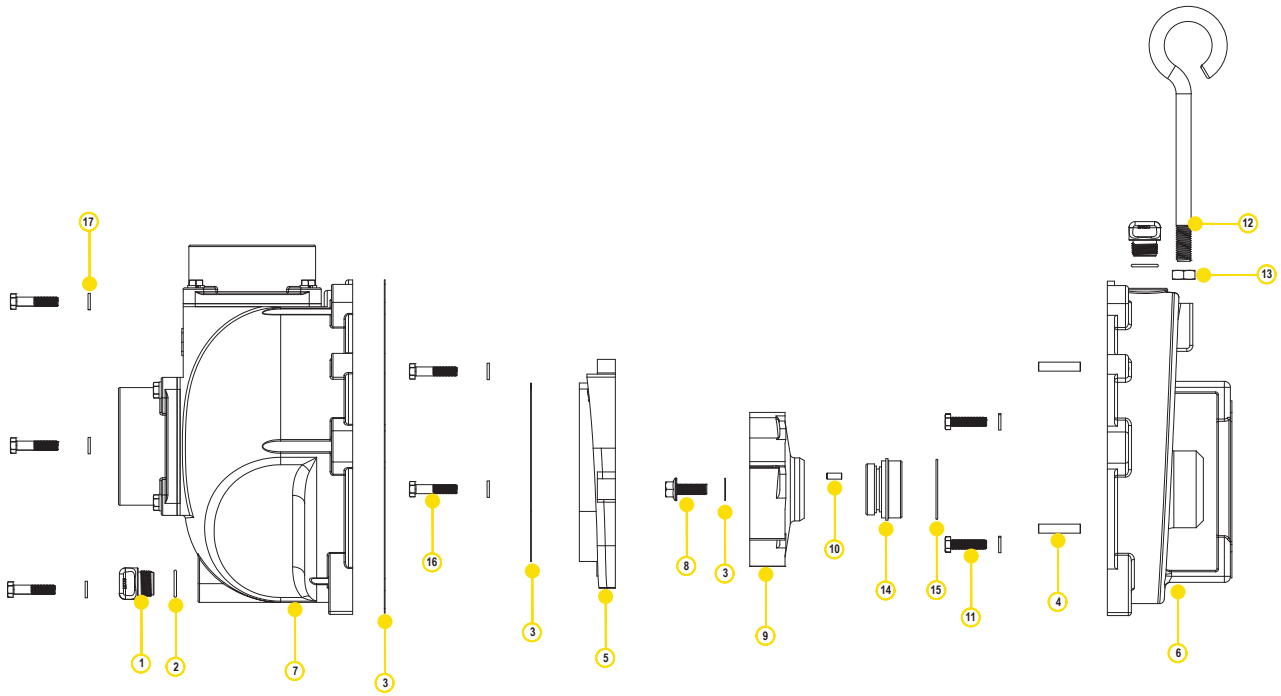

REPLACEMENT PARTS 4" CAST IRON PUMPS

ITEM	PART NO	DESCRIPTION	QTY
1	13777	¾" PLUG	2
2	13778	O-RING	2
3	16019	O-RINGS	1
4	N/A	3/8" X 1¾" DOWELL PIN	2
5	16702	VOLUTE	1
6	16707	REAR BRACKET	1
7	16712	BODY	1
8	16765	IMPELLER BOLT	1
9	16775	4" IMPELLER	1
10	16901	¼" SQ. ¾" KEY STOCK	1
11	18027	⅜" - 16 X 1.50" HHCS	4
12	18033	HANDLE	1
13	18034	⅝" SS JAM NUT	1
14	18435	MECHANICAL SEAL	1
15	V10264	O-RING	1
16	N/A	⅜"-16 X 1¾" HHCS	9
17	V20018	⅜" SS LOCK WASHER	13

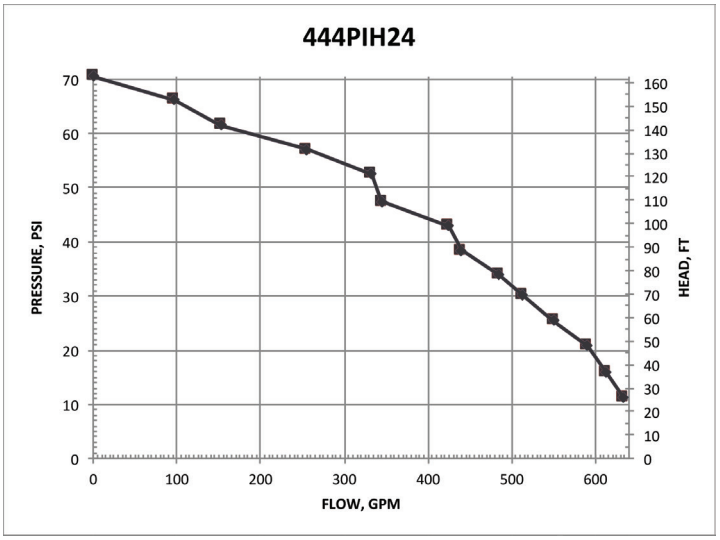

Note: Please see repair parts list for 444PBI on our website.

2" STAINLESS STEEL PUMPS

FEATURES

- 316 stainless steel housing and wettable internal components including impeller, sleeve, wear plate and fasteners
- Carbon ceramic seal with 316 stainless steel cup and spring with FKM elastomer
- Replaceable inlet and outlet flanges
- Dynamically balanced impeller
- Pump only packs complete and ready for attachment to gasoline engine
- Pedestal pump for long coupling to electric motor
- Recommendation for ⅝" shaft: 56C frame size, 3 HP, 3450 RPM & 5" max impeller for close coupling to electric motors
- Recommendation for ⅞" shaft: 145TC frame size, 3 HP, 3450 RPM & 5" max impeller for close coupling to electric motors
- Engine warranty service available at authorized dealers
- Due to weight and size of pumps, Banjo ships these by truck only.

WARNING! DO NOT RUN PUMP DRY, RESTRICT OR REDUCE PORT SIZES OR DEAD HEAD PUMP

WARNING! DO NOT USE WITH FLAMMABLE LIQUIDS

2" STAINLESS STEEL PUMPS W/GAS ENGINES

PART NO	DESCRIPTION	HP	QTY
200PH5-SS	2" SS PUMP W/5.5 HP HONDA® ENGINE W/ PULL ROPE ONLY	5.5	1

2" STAINLESS STEEL PUMP ONLY

PART NO	DESCRIPTION	HP	QTY
200PO-SS	2" SS PUMP ONLY W/ ¾" SHAFT SLEEVE	N/A	1

2" STAINLESS STEEL C-FACE PUMPS

PART NO	DESCRIPTION	HP	QTY
200POSSCF5/8	2" SS C-FACE PUMP W/ ⅝" SHAFT SLEEVE	N/A	1

2" STAINLESS STEEL BEARING PEDESTAL

PART NO	DESCRIPTION	HP	QTY
200PB-SS	2" SS BEARING PEDESTAL W/ ¾" STRAIGHT SHAFT*	N/A	1

2" STAINLESS STEEL PUMPS

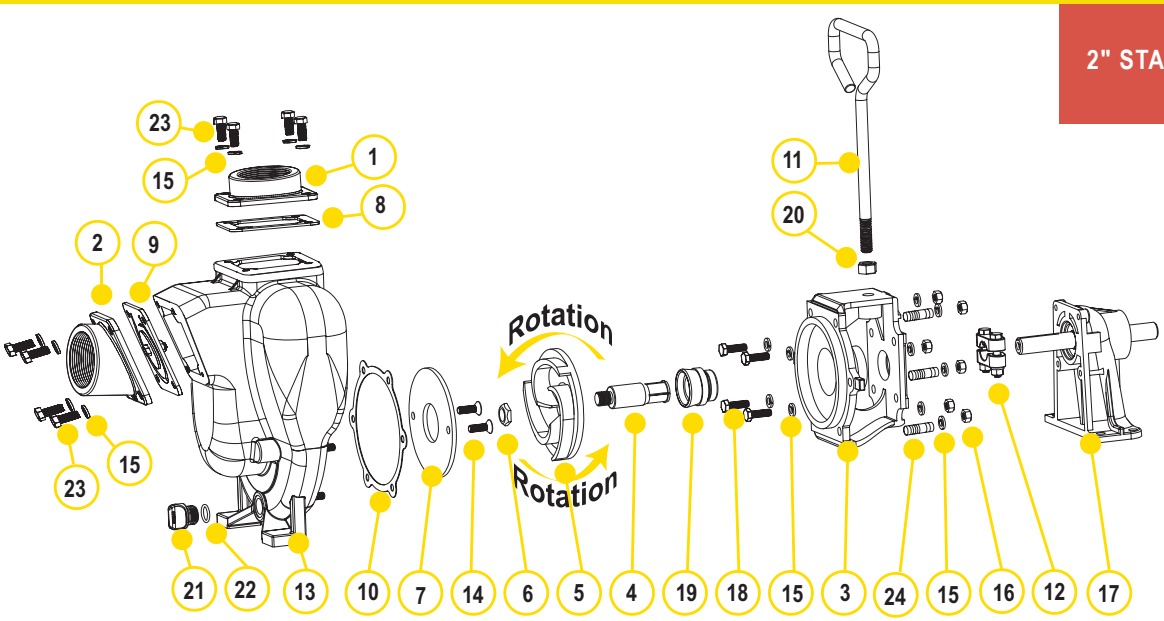

REPLACEMENT PARTS 2" STAINLESS STEEL PUMPS

ITEM	PART NO	DESCRIPTION	QTY
1	17000SS	2" NPT SS OUTLET FLANGE	1
2	17002SS	2" NPT SS INLET FLANGE	1
3	N/A	SS ADAPTER FOR GAS ENGINE	1
3	17046SS	CF ADAPTER FOR ELECTRIC MOTOR	1
4	17005	5/8" SS SLEEVE DRIVE	1
4	17006	3/4" SS SLEEVE DRIVE	1
4	17007	7/8" SS SLEEVE DRIVE	1
5	17008SS	SS IMPELLER	1
5	N/A	4.1" SS IMPELLER	1
5	N/A	4.6" SS IMPELLER	1
6	17009B	5/8" IMPELLER NUT	1
7	17011SS	SS WEAR PLATE	1
8	17014	FKM OUTLET GASKET	1
9	17017	FKM CHECK VALVE ASSEMBLY GASKET	1
10	17018	ADAPTER GASKET	1
11	15022	HANDLE	1
12	17023	5/8" CLAMP, 3/4" SS SHAFT (OLD STYLE)	1
12	17123	5/8" CLAMP, 3/4" SS SHAFT (KEYED CLAMP)	1
12	17024	7/8" CLAMP, 3/4" SS SHAFT	1
13	17026SS	SS PUMP HOUSING	1
14	17130SS	5/16-18 X 1.00" FHSCS, 316 SS	2
15	V10118	5/16" LOCK WASHER	18
16	V10119	5/16" -18 SS HEX NUT	6
17	12882A	BEARING PEDESTAL ASSEMBLY W/ 3/4" SHAFT	1
18	17040	BOLT	4
19	17035SS	FKM SS SEAL ASSEMBLY	1
20	17010	1/2" - 24 X 1" HHCS	1
21	12777SS	1/2" STAINLESS STEEL PLUG	1
22	UV15163V	O-RING FKM	1
23	17019	5/16" - 18 X 3/4" CAP SCREW	8
24	17042	STUD	6
KIT	17100SS	PUMP REPAIR KIT(CONSISTS OF 4,5,7,10,14,19)	1

KITS 2" SS PUMPS

PART NO	FKM REPAIR KIT NO
200PH5-SS	17100SS
200PB-SS	17100SS
200PO-SS	17100SS

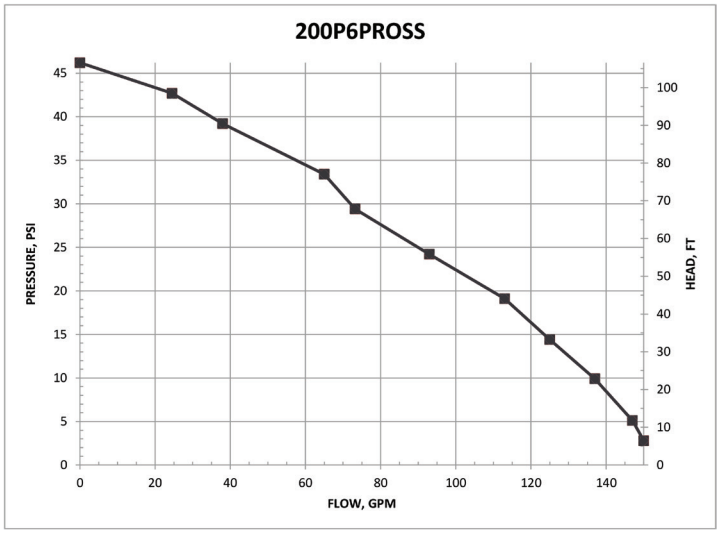

2" STAINLESS STEEL PUMPS WITH ELECTRIC MOTORS

FEATURES

- Stainless steel construction for rugged dependable service
- Stainless steel shaft sleeve to protect engine shaft
- Replaceable inlet and outlet flanges
- Dynamically balanced impeller
- Due to weight and size of pumps, Banjo ships these by truck only.
- Motor warranty service available at authorized dealers
- Motor features include pressure cast aluminum end plates with ribbed design for rigidity, heavy gauge steel frame, 230 volt, with inverter spike resistance magnet wire

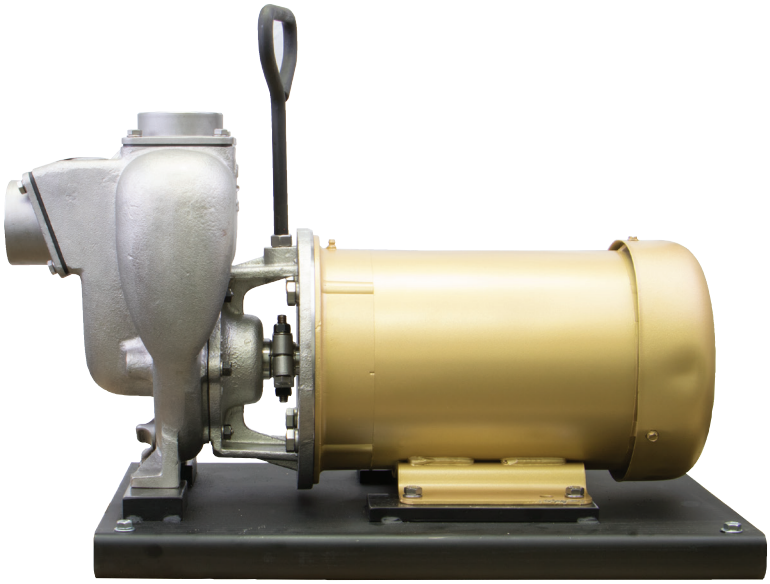

2" STAINLESS STEEL PUMPS W/ELECTRIC MOTORS

PART NO	DESCRIPTION	HP	QTY
234PE5SS	2" STAINLESS STEEL PUMP W/5 HP THREE PHASE ELECTRIC MOTOR	5	1

WARNING! DO NOT RUN PUMP DRY, RESTRICT OR REDUCE PORT SIZES OR DEAD HEAD PUMP

WARNING! DO NOT USE WITH FLAMMABLE LIQUIDS

2" STAINLESS STEEL PUMPS WITH ELECTRIC MOTORS

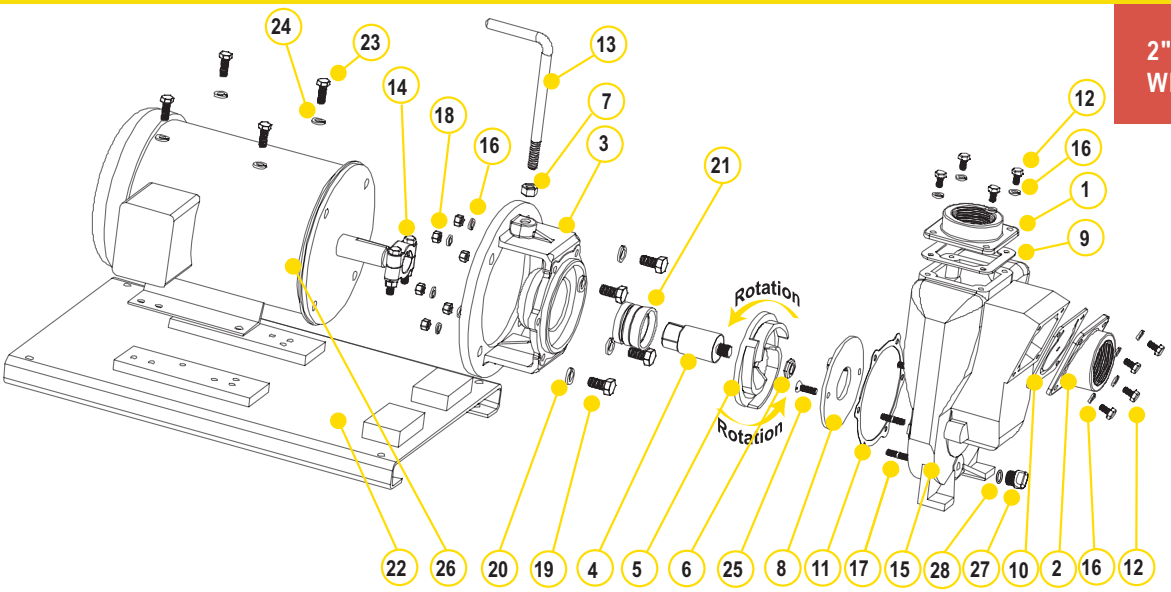

REPLACEMENT PARTS 2" STAINLESS STEEL PUMPS

ITEM	PART NO	DESCRIPTION	QTY
1	17000SS	2" NPT OUTLET FLANGE	1
2	17002SS	2" NPT INLET FLANGE	1
3	17446SS	C-FACE ADAPTER (234PE5SS & 234PE51SS)	1
4	17406	IMPELLER SHAFT (234PE5SS & 234PE51SS)	1
5	17408SS	IMPELLER	1
6	17009B	5/8" IMPELLER NUT	1
7	17010	1/2" HEX NUT	1
8	17011SS	WEAR PLATE	1
9	17014	FKM OUTLET GASKET	1
10	17017	FKM GASKET & CHECK VALVE	1
11	17018	ADAPTER GASKET	1
12	17019	BOLT	8
13	15022	HANDLE	1
14	18129	CLAMP ASSEMBLY	1
15	17026SS	PUMP HOUSING	1
16	V10118	5/16" LOCK WASHER	20
17	17042	HOUSING STUD	6
18	V10119	HEX NUT	8
19	N/A	BOLT	4
20	N/A	WASHER	4
21	18025SS	SEAL ASSEMBLY (234PE5SS & 234PE51SS)	1
22	17701	BASE PLATE ASSEMBLY	1
23	17704	BOLT	4
24	V20018	3/8" LOCK WASHER	4
25	17130SS	5/16-18 X 1.00" FHSCS, 316 SS	2
26	N/A	ELECTRIC MOTOR	1
27	12777SS	1/2" STAINLESS STEEL PLUG	1
28	UV15163V	FKM O-RING	1

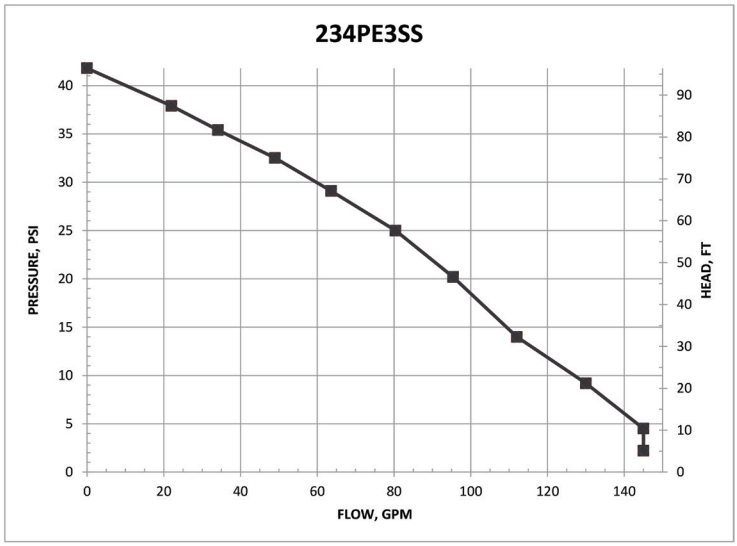

2" STAINLESS STEEL PUMPS WITH HYDRAULIC MOTORS

FEATURES

- Cast iron construction for rugged dependable service
- Stainless steel hardware
- Replaceable inlet and outlet flanges
- Dynamically balanced impeller
- Hydraulic fluid capacity is minimum 6 gallons and maximum 10 gallons
- Open or closed system
- 12 HP motor
- Recommendation to use the motor spool control valve or a suitable equivalent. The lack of such a valve in this circuit may cause failure to the hydraulic motor.

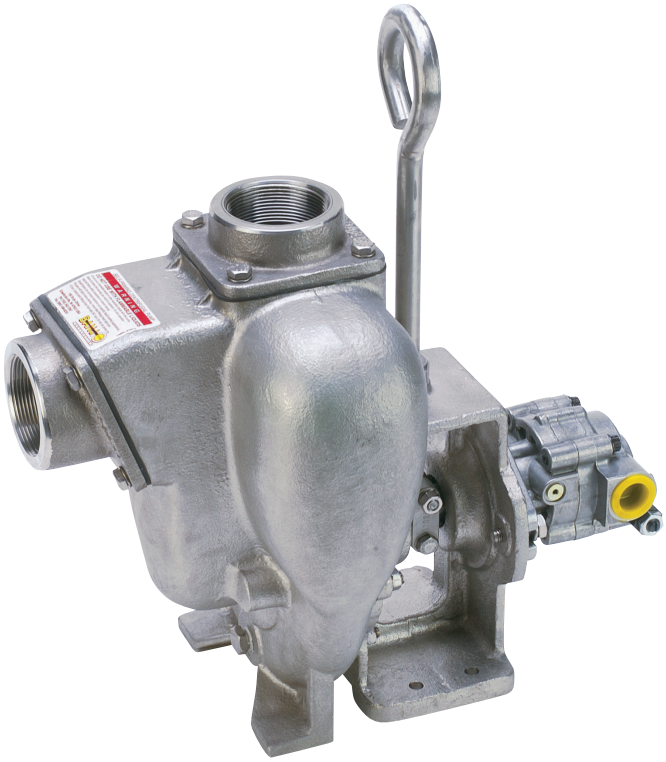

2" STAINLESS STEEL PUMPS W/ HYDRAULIC MOTORS			
PART NO	DESCRIPTION	HP	QTY
200PHYSS	2" STAINLESS STEEL PUMP W/ 12 HP HYDRAULIC MOTOR	12	1

SPOOL VALVE ASSEMBLY DIAGRAM

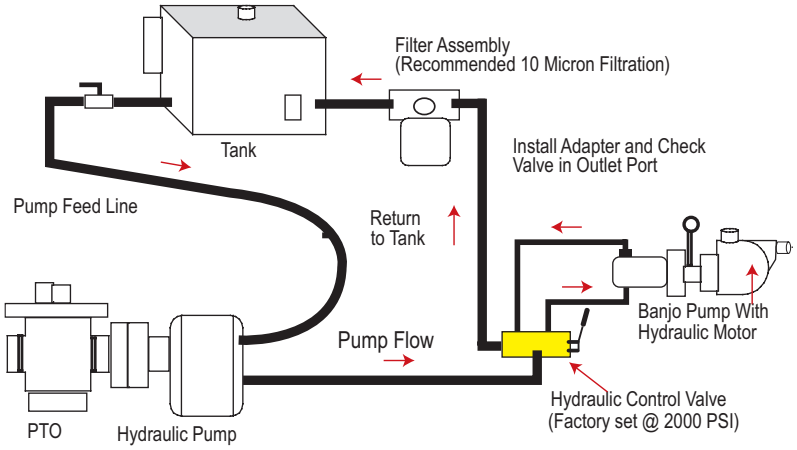

WARNING! DO NOT RUN PUMP DRY, RESTRICT OR REDUCE PORT SIZES OR DEAD HEAD PUMP

WARNING! DO NOT USE WITH FLAMMABLE LIQUIDS

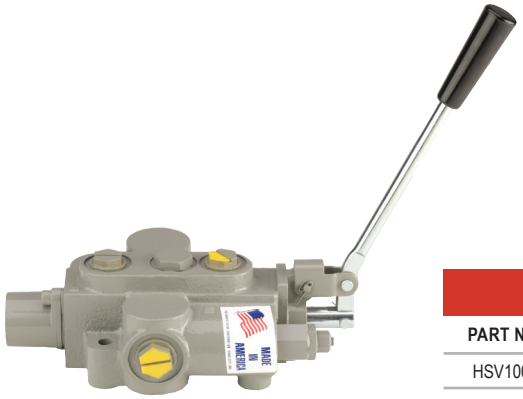

HYDRAULIC MOTOR SPOOL VALVE			
PART NO	DESCRIPTION	HP	QTY
HSV1000	HYDRAULIC MOTOR SPOOL VALVE	N/A	1

2" STAINLESS STEEL PUMPS WITH HYDRAULIC MOTORS

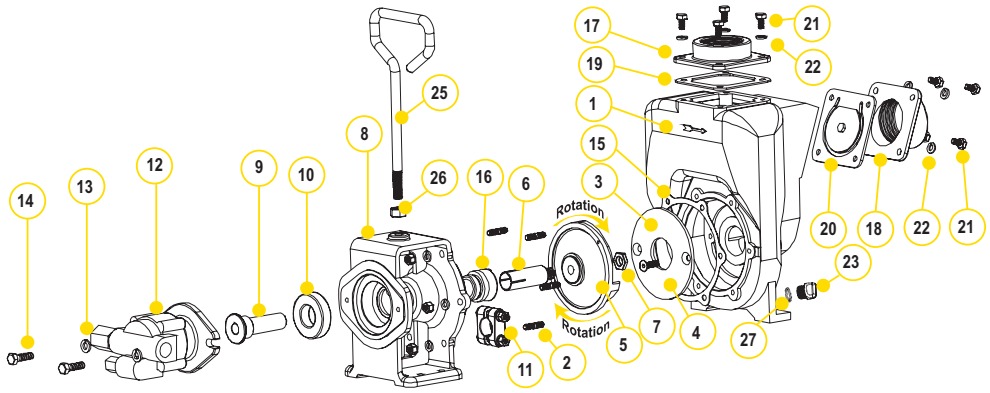

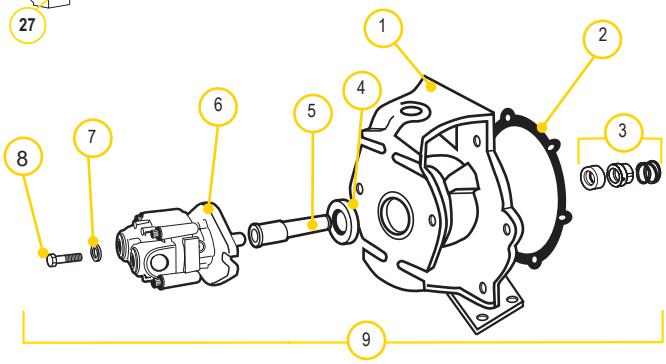

REPLACEMENT PARTS 2" STAINLESS STEEL PUMPS

ITEM	PART NO	DESCRIPTION	QTY
1	17026SS	PUMP HOUSING	1
2	17042	PUMP HOUSING STUD	6
3	17011SS	WEAR PLATE	1
4	17130SS	5/16-18 X 1.00" FHSCS, 316 SS	2
5	17008SS	5" IMPELLER	1
6	17007	7/8" SLEEVE DRIVE FOR ELECTRIC MOTOR	1
7	17009B	5/8" IMPELLER NUT	1
8	N/A	HYDRAULIC ADAPTER	1
9	17055A	HYDRAULIC ADAPTER SHAFT	1
10	17056	SKF 6206-2RS1 BEARING	1
11	17024	7/8" CLAMP, NO KEY	1
12	HY1013	MGG20025BC1D3 HYDRAULIC MOTOR ASSEMBLY	1
13	V20018	3/8" LOCK WASHER	2
14	18010SS	3/8" - 16 X 1.25" HHHCS	2
15	17018	GASKET ADAPTER	1
16	17035SS	FKM SEAL ASSEMBLY	1
17	17000SS	2" NPT OUTLET FLANGE	1
18	17002SS	2" NPT INLET FLANGE	1
19	17014	FKM GASKET	1
20	17017	GASKET CHECK VALVE ASSEMBLY	1
21	17019	5/16" -18 X 0.75" CAP SCREW	8
22	V10118	5/16" SPLIT LOCK WASHER	14
23	12777SS	1/2" STAINLESS STEEL PLUG	1
24	V10119	5/16"-18 HEX NUT	6
25	15022	HANDLE	1
26	17010	1/2" HEX NUT -13UNF-RH	1
27	UV15163V	O-RING FKM	1

REPLACEMENT PARTS 2" HYDRAULIC ADAPTER

ITEM	PART NO	DESCRIPTION	QTY
1	N/A	SS HYDRAULIC MOTOR ADAPTER	1
2	17018	GASKET ADAPTER	1
3	17035SS	SEAL ASSEMBLY	1
N/S	17007	7/8" SS SHAFT SLEEVE	1
4	17056	SKF 6206-2RS1 BEARING	1
5	17055A	HYDRAULIC ADAPTER SHAFT	1
6	HY1013	GRESEN® HYDRAULIC MOTOR	1
7	V20018	LOCK WASHER	2
8	18010SS	BOLT	2

HYDRAULIC MOTOR DATA

U.S. GALLONS/REV.	0.0025
CUBIC INCHES/REV.	0.580
LITERS/REV.	0.0097
MAX HYDRAULIC PRESSURE	2000 PSI
MIN HYDRAULIC PRESSURE	200 PSI
INLET PORT	SAE 10 (7/8-14 UNF-2B)
OUTLET PORT	SAE 10 (7/8-14 UNF-2B)
MINIMUM GPM REQUIRED	6 GPM 2400 RPM
MAXIMUM GPM REQUIRED	10 GPM 4000 RPM
IDEAL GPM REQUIRED	9 GPM 3600 RPM
CONNECTION INFORMATION	
INLET	"A" PORT
OUTLET	"B" PORT
SUPPLIED CHECK VALVE IS TO ENSURE PROPER ROTATION OF THE BANJO PUMP. PLACE CHECK VALVE IN OUTLET PORT (MARKED "B") FOR PROPER RIGHT HAND ROTATION.	
SPOOL VALVE INFORMATION	
REQUIRED OUTLET FLOW	MIN 6 GPM / MAX 10 GPM
REQUIRED SYSTEM PRESSURE	MIN 500 PSI / MAX 2000 PSI

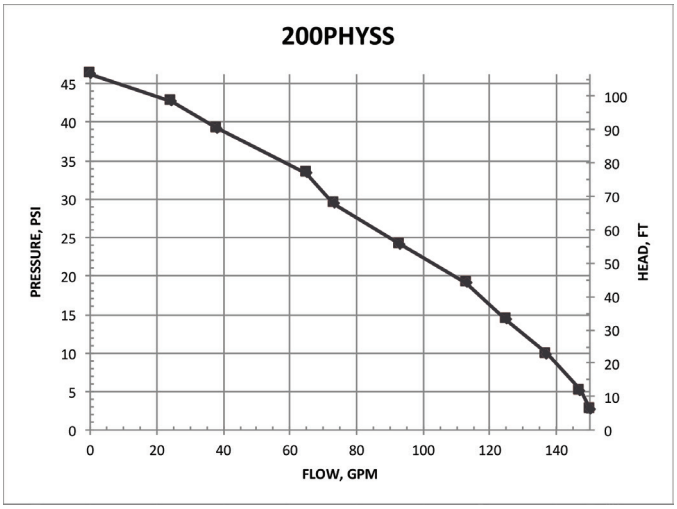

3" STAINLESS STEEL PUMPS

FEATURES

- 316 stainless steel housing and wettable internal components including impeller, sleeve, wear plate and fasteners
- Carbon ceramic seal with 316 stainless steel cup and spring with FKM elastomer
- Replaceable inlet and outlet flanges
- Dynamically balanced impeller
- Pump only packs complete and ready for attachment to gasoline engine
- Pedestal pump for long coupling to electric motor
- Recommendation for ⅝" shaft: 56C frame size, 3 HP, 3450 RPM & 5" max impeller for close coupling to electric motors
- Recommendation for ⅞" shaft: 145TC frame size, 3 HP, 3450 RPM & 5" max impeller for close coupling to electric motors
- Engine warranty service available at authorized dealers
- Due to weight and size of pumps, Banjo ships these by truck only.

WARNING! DO NOT RUN PUMP DRY, RESTRICT OR REDUCE PORT SIZES OR DEAD HEAD PUMP

WARNING! DO NOT USE WITH FLAMMABLE LIQUIDS

3" STAINLESS STEEL PUMPS W/GAS ENGINES

PART NO	DESCRIPTION	HP	QTY
300PH13SS	3" SS PUMP W/13 HP HONDA® ENGINE W/ELECTRIC START & PULL ROPE	13	1

3" STAINLESS STEEL PUMP ONLY

PART NO	DESCRIPTION	HP	QTY
300PO-SS	3" SS PUMP ONLY W/ 1" SHAFT SLEEVE	N/A	1

3" STAINLESS STEEL BEARING PEDESTAL

PART NO	DESCRIPTION	HP	QTY
300PB-SS	3" SS BEARING PEDESTAL W/ 1" STRAIGHT SHAFT	N/A	1

3" STAINLESS STEEL PUMPS W/ HYDRAULIC MOTOR

PART NO	DESCRIPTION	HP	QTY
300PHYSS	3" STAINLESS STEEL PUMP W/ 12 HP HYDRAULIC MOTOR	12	1

BANJO® Liquid Handling Products

3" STAINLESS STEEL PUMPS

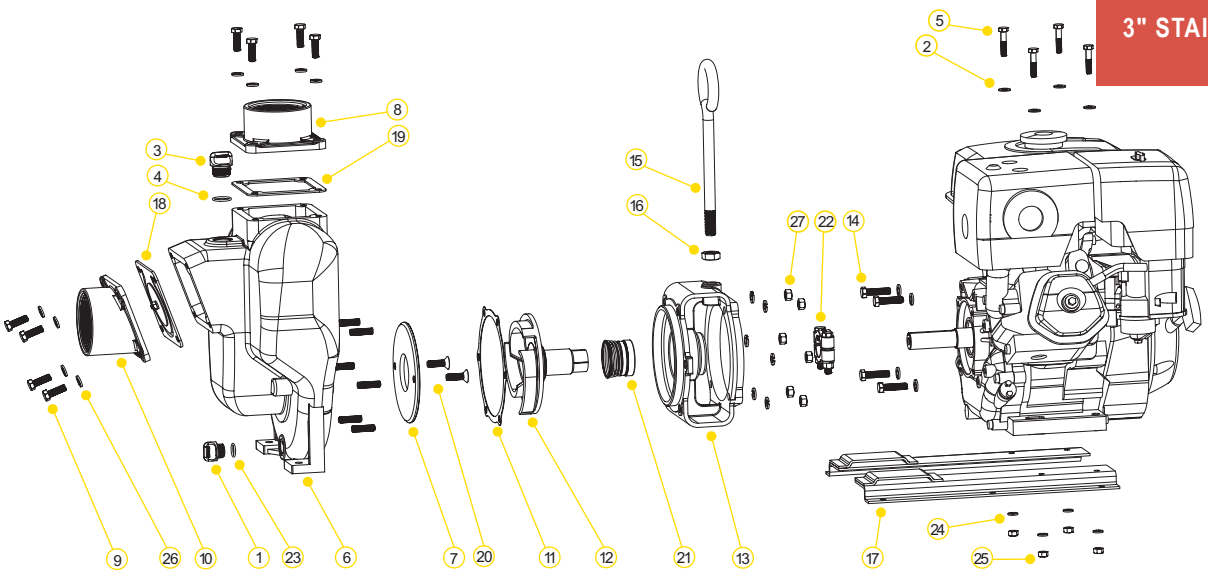

REPLACEMENT PARTS 3" STAINLESS STEEL PUMPS

ITEM	PART NO	DESCRIPTION	QTY
1	12777SS	½" STAINLESS STEEL PLUG	1
2	12901	SS REAR BRACKET WASHER	4
3	13777SS	¾" STAINLESS STEEL PLUG	1
4	13778V	O-RING FKM	1
5	N/A	5/16" - 18 X 1¾" ZINC PLATED	4
6	18001SS	SS PUMP HOUSING	1
7	18004SS	SS WEAR PLATE	1
8	N/A	3" NPT OUTLET FLANGE	1
9	18010SS	⅜" - 16 X 1⅛ 8" SS CAP SCREW HXHD	8
10	N/A	3" NPT INLET FLANGE	1
11	18021	ADAPTER GASKET	1
12	18023SS	1" SS IMPELLER & DRIVE SHAFT FOR GAS ENGINE	1
12	N/A	1⅛" SS IMPELLER & DRIVE SHAFT FOR ELECTRIC MOTOR (300PO-SSCF)	1
13	18026SS	ADAPTER FOR GAS ENGINE	1
13	N/A	ADAPTER FOR ELECTRIC MOTOR (300PO-SSCF)	1
14	18027	⅜" -16 X 1½" HHCS	4
15	18033	HANDLE	1
16	18034	⅝" SS JAM NUT	1
17	18035	Z RAILS	1
18	18042	FKM GASKET CHECK VALVE ASSEMBLY	1
19	18044	FKM OUTLET GASKET	1
20	18106SS	WEAR PLATE FLAT HEAD SCREW	2
21	18025SS	FKM SEAL ASSEMBLY	1
22	18129	CLAMP ASSEMBLY	1
23	UV15163V	O-RING FKM	1
24	V10118	5/16" LOCK WASHER	4
25	V10119	5/16" - 18 SS HEX NUT	4
26	V20018	⅜" SS LOCK WASHER	18
27	V20019	⅜" 16 SS HEX NUT	6
KIT	18100SS	REPAIR KIT(CONSIST OF ITEMS 7,11,12, 20 & 21)	1

KITS 3" SS STEEL PUMPS

PART NO	FKM REPAIR KIT NO
300PH13SS	18100SS
300PB-SS	18100SS
300PO-SS	18100SS

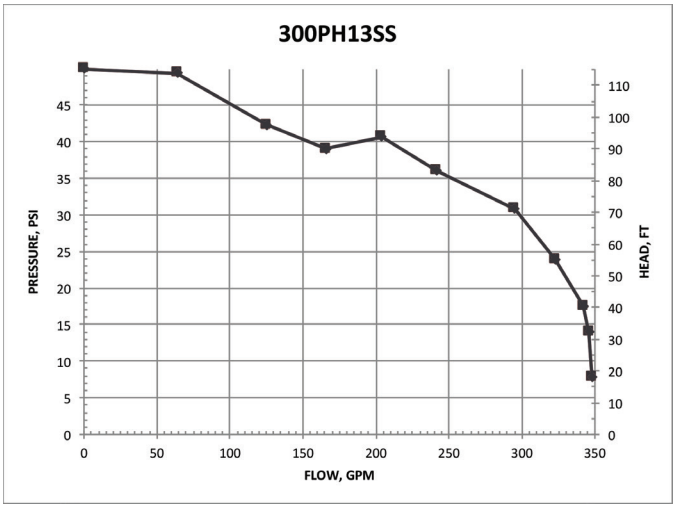

Note: Please see repair parts list for 300PHYSS on our website.

PART NO	PAGE NO(S)	WEIGHT
12046	101, 129	0.5
12052	101	N/A
12099	97, 101, 109, 111, 127, 129	0.07
12155	99, 107, 115, 117	1.19
12705	97, 99, 101, 103, 105, 107, 109, 111, 113, 115, 117, 127, 129, 139, 141,	0.26
12709	99, 107, 115, 117, 139, 141	0.001
12710	97, 101, 103, 105, 109, 111, 113, 127, 129,	0.01
12713	97, 101, 103, 105, 109, 111, 113	0.11
12716	97, 105, 109, 111, 127	0.02
12717	97, 99, 101, 103, 105, 107, 109, 111, 113, 115, 117, 127, 129, 139, 141	0.001
12720	97, 99, 101, 103, 105, 107, 109, 111, 113, 115, 117	0.03
12723	89	0.01
12724	89	0.001
12725	97, 99, 101, 103, 105, 107, 109, 111, 113, 115, 117	0.002
12754	97, 99, 101, 103, 105, 107, 109, 111, 113, 115, 117	0.002
12756	101, 129	1.44
12766	107, 117, 99	0.08
12772	97, 99, 101, 103, 105, 107	0.21
12777	47, 85, 89, 97, 99, 101, 103, 107, 115, 117, 119, 121, 123, 125, 131, 133, 135, 139, 141	0.018
12900	97, 99, 101, 103, 105, 107, 109, 111, 113, 115, 117	0.008
12901	97, 101, 103, 105, 109, 111, 113, 127, 129, 139, 141, 151	0.004
13034	99, 107, 115, 117, 139	N/A
13055	115, 139, 141	0.674
13702	109, 111, 113, 115, 117	1.479
13712	109, 113, 115	4.018
13719	99, 107, 115, 117, 139, 141	0.012
13765	109, 111, 137	0.05
13766	115, 139	0.084
13771	109, 111, 113, 115	0.204
13772	109, 111, 115, 117	0.223
13777	49, 93, 109, 111, 113, 127, 129, 131, 133, 135, 137, 139, 141, 143	0.025
13778	49, 93, 109, 111, 113, 127, 129, 131, 133, 135, 137, 139, 141, 143	0.002
13999	109, 111, 113	0.266
15000	127, 129	2.244
15022	119, 121, 123, 125, 127, 129, 145, 147, 149	1.124
15025	137	N/A
15035	115	0.35
15702	127, 129	9.086
15703	127, 129	14.978
15712	127, 129	26.082
15751	109, 111, 127, 129	0.014
15752	127, 129	0.002

PART NO	PAGE NO(S)	WEIGHT
15772	127, 129, 139	1.75
15999	127, 129	0.282
16001	137	4.808
16003	137	5.688
16011	137	0.098
16019	137, 143	0.068
16099	137	0.25
16702	137, 143	11
16704	137	41.5
16706	137	0.888
16707	143	4
16710	137	0.002
16712	143	58
16713	137	0.2
16733	137	55
16751	137	0.024
16752	137	0.004
16765	137, 143	0.098
16773	137	3.452
16774	137	2.75
16775	143	4.242
16901	115, 117, 137, 139, 141, 143	0.01
17000	119, 121, 123, 127	1.528
17001	119	1.472
17002	119, 121, 123	1.888
17003	119	1.926
17004	119	6.19
17005	119, 145	0.376
17006	119, 145	0.25
17007	119, 123, 125, 145, 149	0.216
17008	119, 123, 125	2
17010	119, 121, 123, 125, 127, 129, 135, 145, 147, 149	0.036
17011	119, 121, 123	0.866
17013	119, 121, 123, 127	0.034
17014	145, 147, 149	0.042
17016	119, 121, 123	0.214
17017	145, 147, 149	0.262
17018	119, 121, 123, 125, 145, 147, 149	0.01
17019	119, 121, 123, 127, 145, 147, 149	0.024
17023	119, 145	0.386
17024	119, 123, 125, 145, 149	0.128
17026	119, 123, 125	21.23

PART NO	PAGE NO(S)	WEIGHT
17028	119	0.16
17032	121	0.036
17033	119, 127	3.018
17035	119, 123, 125	0.18
17040	119, 145	0.028
17042	119, 123, 145, 147, 149	0.02
17046	119, 123	7.572
17056	113, 125, 149	0.462
17100	119	4
17123	119, 121, 145	0.384
17130	119, 121, 123	0.022
17202	121	3.738
17208	121	1.802
17226	121	25.21
17235	121	0.35
17242	121	0.032
17406	123, 147	0.638
17408	123	2
17446	123	18
17701	101, 123, 129, 147	29.5
17704	101, 123, 129, 131, 133, 137, 147	0.046
18001	131, 133, 135	65.65
18004	131, 133, 135	1.628
18008	131, 133, 135	3.802
18009	131, 133, 135	0.036
18012	131, 133, 135	3.906
18013	131, 133, 135	0.53
18021	131, 133, 135, 151	0.012
18025	123, 131, 135	0.39
18026	131	9.91
18027	137, 143, 151	0.056
18029	131, 135	0.63
18033	131, 133, 135, 137, 139, 141, 143, 151	1.236
18034	131, 133, 135, 137, 139, 141, 143, 151	0.048
18035	131, 151	2.73
18042	151	0.584
18044	151	0.056
18048	131	12.788
18049	131, 135	20.516
18055	131, 135	0.834
18056	135	0.1
18100	131, 135	7.2

PART NO	PAGE NO(S)	WEIGHT
18106	131, 133, 135	0.04
18129	123, 131, 133, 147, 151	0.64
18206	133	4.8
18218	131, 133, 135	1.436
18435	143	1
18500	131, 133, 137	13
18502	131, 135, 141	0.802
18504	131	1.928
18511	137	3.404
18512	137	0.036
18600	135	N/A
18700	95	1.728
18702	139, 141	1.794
050C	70	0.14
050D	70	0.16
050E	70	0.05
050F	70	0.06
075C	71	0.15
075CAP	70, 71, 72	0.13
075D	71	0.15
075E	71	0.06
075F	71	0.06
100125CAP	71	0.27
100125PL	71	0.06
100A	71	0.09
100B	71	0.29
100C	71	0.27
100D	71	0.31
100E	71	0.1
100F	71	0.11
100G	67, 73	0.2
100GV	67, 73	0.02
100RING	73	0.01
12000A	97, 101, 103, 105, 109, 111, 113	0.75
12000AV	97, 101, 105	0.9
12055E	103	0.57
12201W	115	1.46
12202W	99, 107, 115, 117	1.46
125A	71	0.1
125B	71	0.3
125C	71	0.29
125D	71	0.31

PART NO	PAGE NO(S)	WEIGHT
125E	71	0.11
125F	71	0.98
12600B	103, 113, 127	14
12702A	97, 99, 101, 103, 105, 107	1.21
12703A	97, 101, 103, 105, 109, 111, 113	2.37
12703AW	115	2.79
12705V	97, 101, 115	0.24
12707W	99, 107, 117	2.79
12709V	115	0.001
12710V	97, 101	0.01
12712A	97, 99, 101, 103	3.25
12713V	97, 101, 127, 129	0.12
12715A	97, 103, 105, 109, 111, 113, 127, 129, 139, 141	0.05
12717V	97, 101, 115	0.01
12719A	97, 99, 101, 103, 105, 107, 109, 111, 113, 117, 127, 129, 139, 141	0.05
12719AV	97, 101	0.05
12754V	97, 101, 115	0.01
12765A	97, 101, 103, 105, 109, 111, 113, 127, 129	0.05
12771A	97, 105	0.22
12775A	97, 99, 101, 103, 105, 107, 109, 111, 113, 115	0.01
12777SS	145, 147, 149, 151	0.14
12882A	97, 109, 111, 119, 121, 127, 145	7.6
12883B	119	0.146
12902A	97, 99, 101, 103, 105, 107, 109, 111, 113, 115, 117, 127, 129, 139, 141	0.006
12999A	97, 101, 103, 105	0.25
12999AV	97, 101, 105	0.32
13719V	115	0.019
13777SS	151	0.205
13778V	151	0.002
150(200)K	73	0.134
15000V	127, 129	2.364
150125A	71	0.197
150125B	71	0.26
150125C	71, 72	0.568
150125D	71	0.31
150125E	71	0.16
150125F	71	0.18
15035E	99, 107, 115, 117, 133, 139, 141	0.386
150A	71	0.18
150A90	74	0.307
150B	71	0.57
150C	71	0.57

PART NO	PAGE NO(S)	WEIGHT
150C90	74	0.62
150CAP	71	0.54
150D	71	0.59
150D90	74	0.65
150E	71	0.21
150F	71	0.21
150F90	74	0.267
150G	45, 67, 73	0.015
150GV	45, 67, 73	0.3
150PL	71	0.16
150POICF5/8-4.1	118	47
150RING	73	0.026
15999V	127, 129	0.288
16704A	137	41.5
16774A	137	2.931
17000SS	145, 147, 149	1.58
17002SS	145, 147, 149	2.038
17008-4.1	119	1.534
17008SS	145, 149	2
17009B	119, 121, 123, 125, 145, 147, 149	0.022
17011SS	145, 147, 149	0.888
17026SS	145, 147, 149	32
17035SD	119	0.13
17035SS	145, 149	0.18
17046SS	145	8.804
17055A	125, 149	1.75
17056E	103	2
17100SS	145	3.384
17130SS	145, 147, 149	0.02
17201A	121	8.736
17206A	121	0.628
17408SS	147	2.106
17446SS	147	10.818
18001SS	151	57.5
18004SS	151	1.616
18010SS	103, 113, 125, 131, 133, 135, 149, 151	0.044
18023-1.125	131	4.322
18023SS	151	4.32
18025SD	131, 135	0.32
18025SS	147, 151	0.25
18026SS	151	10.11
18055H	141	0.75

PART NO	PAGE NO(S)	WEIGHT
18100SS	151	7.5
18106SS	151	0.04
18200A	133	31.6
18202A	133	4.918
18203A	133	4.92
19001H	141	10.7
19201W	139, 141	10
19703W	139, 141	17.006
19772SS	139, 141	N/A
200150C	72	0.66
200A	72	0.3
200A90	74	0.461
200B	72	0.64
200B90	74	0.948
200C	72	0.69
200C90	74	0.78
200CAP	64, 72	0.6
200CAPSH	64, 72	0.52
200D	72	0.66
200D90	74	0.88
200E	72	0.32
200F	72	0.31
200F45	74	0.346
200F90	74	0.434
200FF	73	0.331
200G	45, 67, 73	0.02
200GV	45, 67, 73	0.03
200KL	73	0.18
200P	73	0.17
200P6PRO	96	50
200P6PROE	96	N/A
200P6PROV	96	51
200PB	96	15.786
200PBI	118	48
200PB-SS	144	52
200PH-5	96	51
200PH-5E	96	N/A
200PH5-SS	144	105
200PH-5V	96	48
200PH5W	98	53
200PH6	96	N/A
200PHA	102	25

PART NO	PAGE NO(S)	WEIGHT
200PHY	102	21.308
200PHYSS	148	52
200PHYW	102	28
200PI-3	118	81
200PI6PRO	118	81.5
200PIH-5	118	81.5
200PIH5E	118	N/A
200PIHY	124	48
200PKL	73	0.02
200PL	72	0.21
200PO	96	7.286
200POI	118	52.5
200POICF5/8	118	47
200POICF7/8	118	47
200PO-SS	144	47
200POSSCF5/8	144	47
200PO-V	96	10
200SBS	95	0.25
201B	72	0.71
201CAPSH	64	0.566
201FPT	64	0.04
201PBIW	120	58
201PIH5W	120	94
201POIW	120	59
202CAP	64	0.34
205PB	96	16
205PB-V	96	16
205POW	98	8.5
211FPT	64	0.03
222PBI	126	70
222PI6PRO	126	100
222PIE5	128	180
222PIE51	128	190
222PIH5	126	82
222PIH5E	126	110
222PIH6	126	110
222POI	126	60
231MPT	64	0.074
234PE5SS	146	168
234PIE5	122	160
234PIE51	122	200
234POI	122	N/A

PART NO	PAGE NO(S)	WEIGHT
234PPE5	100	135
234PPE51	100	145.5
234PPE51V	100	145
234PPE5V	100	123
250CAP	72	0.68
300A	72	0.48
300B	72	1.17
300C	72	1.4
300CAP	72	1.07
300D	72	1.19
300E	72	0.78
300F	72	0.57
300F200F	73	0.609
300FF	73	0.644
300G	45, 67, 73	0.04
300GV	45, 67, 73	0.06
300K	73	0.23
300P	73	0.036
300P11PRO	108	81
300P11PROW	114	67
300PB	108	20
300PBI	130	125
300PB-SS	150	99
300PBW	114	26
300PH13SS	150	150
300PH13W	114	103
300PH-6	108	50
300PH6W	114	56
300PHY	112	26
300PHYSS	150	140
300PHYW	112	N/A
300PIH13	130	176
300PIH-8	130	166
300PIHY	134	140
300PL	72	0.43
300PO	108	12.005
300POI	130	106
300PO-SS	150	115
300POW	114	15.3
300POW6	114	N/A
300SBS	95	0.25
301PBIW	132	135

PART NO	PAGE NO(S)	WEIGHT
301PIH13W	132	N/A
301POIW	132	130
303B	72	1.634
303B200A	72	1.554
303C	72	1.74
305PHAW	112	N/A
333PBI	136	185
333PIE15	136	242
333PIH13	136	285
333POI	136	90
400A	72	1.27
400B	72	2.03
400C	72	2.39
400CAP	72	1.44
400D	72	2.07
400E	72	1.786
400F	72	1.42
400G	73	0.06
400PL	72	1.11
444PIH24	142	345
444POI	142	120
75A1/2	70	0.07
75A1/4	70	0.08
75A3/4	71	0.05
75B1/2	70	0.14
75B3/4	71	0.14
75G	73	0.1
75PL	70, 71	0.05
A204	97, 99, 101, 103, 105, 107, 109, 111, 113, 115, 117, 127, 129, 139, 141	0.001
A204V	97, 101, 115	N/A
AF100	69	0.304
AF100G	69	0.06
AF100GV	69	0.06
AF150	69	0.43
AF150G	69	0.08
AF200	69	0.657
AF200G	69	0.17
AF200GV	69	0.17
AF300	69	1.175
AF300G	69	0.17
AF300GV	69	0.17
AF400	69	1.587

PART NO	PAGE NO(S)	WEIGHT
AF400G	69	0.45
AF400GV	69	0.45
AFB200	69	0.698
AFB300	69	1.42
BEM5-182CZ	129	95
BF075	65	0.82
BF075BD	66	0.88
BF100	65	0.82
BF100BD	66	0.9
BF100GE	65, 66	0.07
BF100GRE	66	0.01
BF100GRV	66	0.01
BF150	65	1.26
BF150BD	66	1.32
BF200	65	1.07
BF200BD	66	1.2
BF200GE	65, 66	0.05
BF200GFV	66	0.05
BF200GV	65, 66	0.05
BF200V	65	1.07
BF220	65	1.45
BF220BD	66	1.5
BF220GE	65, 66	0.154
BF220GV	65, 66	0.08
BF300	65	2.264
BF300BD	66	2.42
BF300GE	65, 66	0.2
BF300GFE	66	0.02
BF300GFV	66	0.02
BF300GV	65, 66	0.1
CAP038	78	0.03
CAP050	78	0.06
CAP075	78	0.052
CAP100	78	0.09
CAP125	78	0.13
CAP150	78	0.12
CAP200	78	0.25
CAP300	78	0.59
CPLG025	77	0.03
CPLG038	77	0.026
CPLG050	77	0.09
CPLG075	77	0.11

PART NO	PAGE NO(S)	WEIGHT
CPLG100	77	0.13
CPLG125	77	0.19
CPLG150	77	0.3
CPLG200	77	0.34
CPLG300	77	0.836
CR050	78	0.13
CR075	78	0.35
CR100	78	0.27
CR125	78	0.726
CR150	78	0.571
CR200	78	0.744
CV050	16	0.27
CV100	16	0.222
CV100MT	16	0.17
CV10175	99, 107, 115, 117, 139, 141	0.2
CV10175V	115	N/A
CV221	16	1
CV300	16	1.45
CV301	16	1.518
DB20153M	52, 53	0.158
DB20290	52, 53	0.004
DB20295	52, 53, 57, 58	N/A
DM100ABSS	56	3.5
DM100ASS	56	3.5
DM100CAP	56	0.19
DM100DBSS	56	3.75
DM100DSS	56	3.75
DM100DSSE	56	3.75
DM100PL	56	0.234
DM101SS	56	0.346
DM10294A	56	0.01
DM10295A	56	0.006
DM10296	56	0.1
DM102SSV	56	0.386
DM150A	52	2.64
DM150AB	52	2.2
DM150ABSS	57	6.3
DM150AE	52	2.75
DM150ASS	57	6.35
DM150D	52	2.64
DM150DB	52	2.2
DM150DBSS	57	6.9

PART NO	PAGE NO(S)	WEIGHT
DM150DE	52	2.82
DM150DSS	57	6.9
DM150DSSE	57	6.9
DM200A	53	3.007
DM200AB	53	2.2
DM200ABSS	58	5.768
DM200ACAP	57, 58	1
DM200ACF	35	3.15
DM200AE	53	2.75
DM200APL	57, 58	0.49
DM200ASS	58	6.2
DM200CAP	52, 53	0.38
DM200D	53	2.75
DM200DB	53	2.2
DM200DBSS	58	6.9
DM200DCF	35	2.75
DM200DE	53	3
DM200DSS	58	6.9
DM200DSST	58	6.9
DM200PL	52, 53	0.49
DM20153F	52, 53	0.251
DM20153M	52, 53	0.417
DM201SS	57, 58	1.158
DM20200A	52, 53	0.242
DM20200D	52, 53	0.254
DM20294A	52, 53, 57, 58	0.016
DM20295A	52, 53	0.01
DM20296	52, 53, 57, 58	0.125
DM202SSV	57, 58	1.32
DM220A	54	4.3
DM220ABSS	59	0.43
DM220ASS	59	7.8
DM220CAP	54, 59	1
DM220D	54	5.482
DM220DBSS	59	7
DM220DSS	59	9.8
DM221PL	54	N/A
DM221SS	59	0.206
DM222SS	59	0.216
DM25153M	54	0.457
DM25200	54	N/A
DM25294	59	N/A

PART NO	PAGE NO(S)	WEIGHT
DM25294T	59	0.048
DM300ACF	35	7.72
DM300AFP	55	4.8
DM300CAP	55	2.82
DM300DCF	35	8.4
DM300DFP	55	8.4
DM300PL	55	0.509
DM35153F	55	0.463
DM35153M	55	0.659
DM35200	55	N/A
DMMT201A	53	2.5
DPCF100	60	0.5
DPCM100	60	0.25
DPCMT100	60	0.27
EL025-90	79	0.016
EL038-90	79	0.04
EL050-90	79	0.07
EL075-90	79	0.1
EL100-45	79	0.14
EL100-90	79	0.15
EL125-90	79	0.22
EL150-90	79	0.33
EL200-90	79	0.434
EL300-90	79	1.195
EVX071	18	3.82
EVX100BL	21	4.313
EVX100SL	21	4.313
EVX101	18	3.892
EVX121	18	3.832
EVX151	18	N/A
EVX200BL	21	4.876
EVX200SL	21	4.876
EVX201	19	4.312
EVX220	25	4.92
EVX220BL	21	6.253
EVX220SL	21	6.253
EVX221	19	5.052
EVX300	20	9.24
EVXR071	18	N/A
EVXR101	18	3.96
EVXR151	18	4.45
EVXR201	19	5.33

PART NO	PAGE NO(S)	WEIGHT
EVXR221	19	5.92
EVXR300	20	9.24
FC100	45	0.25
FC200	45	0.23
FC220	37, 45	0.25
FC220B	45	1.364
FC220TB	45	0.43
FC300	37, 45	0.34
FC300B	45	1.76
FC300TB	45	0.52
GHFT075A	75	0.06
GHFT075D	75	0.17
GHFT075G	75	0.025
GHFT075MPT	75	0.04
GHMT075B	75	0.14
GHMT075F	75	0.05
GHMT075FPT	75	0.04
GHMT075MPT	75	0.04
GHN075	75	0.6
H25053	5	0.265
HB025	80	0.01
HB025/038-90	80	0.01
HB025/050-90	80	0.022
HB025-038	80	0.012
HB025-038SS	80	0.07
HB025-050	80	0.015
HB025-050SS	80	0.07
HB025-90	80	0.01
HB025SS	80	0.04
HB038	80	0.01
HB038-050	80	0.02
HB038-050SS	80	0.1
HB038-90	80	0.02
HB038SS	80	0.09
HB050	80	0.03
HB050/038-90	80	0.024
HB050/075-90	80	0.04
HB050-025	80	0.03
HB050-038	80	0.02
HB050-058SS	80	0.128
HB050-075	80	0.03
HB050-075SS	80	0.2

PART NO	PAGE NO(S)	WEIGHT
HB050-90	80	0.03
HB050SS	80	0.13
HB075	80	0.04
HB075/050-90	80	0.04
HB075/100-90	80	0.05
HB075-038	80	0.03
HB075-050	80	0.03
HB075-050SS	80	0.2
HB075-058	80	0.038
HB075-100	80	0.05
HB075-100SS	80	0.25
HB075-90	80	0.05
HB075SS	80	0.2
HB100	80	0.06
HB100/075-90	80	0.06
HB100/125-90	80	0.1
HB100-075	80	0.06
HB100-075SS	80	0.3
HB100-125	80	0.08
HB100-90	80	0.07
HB100SS	80	0.3
HB125	80	0.1
HB125/100-90	80	0.09
HB125/150-90	80	0.09
HB125-075	80	0.08
HB125-100	80	0.09
HB125-150	80	0.1
HB125-90	80	0.11
HB125SS	80	0.5
HB150	80	0.13
HB150/125-90	80	0.16
HB150-100	80	0.09
HB150-125	80	0.1
HB150-200	80	0.19
HB150-90	80	0.23
HB150SS	80	0.68
HB200	80	0.2
HB200/150-90	80	0.22
HB200-150	80	0.18
HB200-90	80	0.33
HB200SS	80	1.13
HB300	80	0.703

PART NO	PAGE NO(S)	WEIGHT
HB300-90	80	1.078
HB300SS	80	3.55
HB400	80	1.64
HBB20012590	79	0.25
HBC050075	78	0.028
HBEL100-90	79	0.06
HBEL150/100-90	79	0.197
HBF075	80	0.06
HBF075-100	80	0.08
HBF075-90	80	0.06
HBF100	80	0.09
HBT038	81	0.03
HBT050	81	0.03
HBT050-075	81	0.03
HBT075	81	0.05
HBT075-050	81	0.04
HBT075-050SS	81	0.246
HBT075-100	81	0.06
HBT100	81	0.08
HBT100-075	81	0.06
HBT100-100	81	0.08
HBT150-100	81	0.218
HBT150-150	81	0.235
HBT200	81	0.388
HBT300	81	1.161
HM038	81	0.03
HM050	81	0.01
HM075	81	0.026
HM100	81	0.04
HM125	81	0.07
HM150	81	0.08
HM200	81	0.22
HM300	81	0.763
HSV1000	102, 112, 124, 134, 140, 148	11
HV200	36	0.58
HY1001	135	1.5
HY1003	103, 113	1.5
HY1012	135, 141	13.2
HY1013	103, 113, 149	4.5
L200B	73	0.64
L200C	73	0.7
L200CAP	73	0.62

PART NO	PAGE NO(S)	WEIGHT
L200D	73	0.736
LEV038	22	0.55
LEV038PL	22	0.08
LEV050	22	0.6
LS050-20	88	0.35
LS050-40	88	0.35
LS050-80	88	0.37
LS050B/C1	89	0.298
LS075-20	88	0.3
LS075-40	88	0.33
LS075-80	88	0.35
LS075B/C1	89	0.28
LS075-G	89	0.004
LS100-20	88	0.91
LS100-40	88	0.9
LS100-80	88	0.96
LS100B/C1	89	0.872
LS100-C1	47, 89	0.232
LS100-G	47, 89	0.02
LS100-GV	89	0.02
LS120	47, 89	0.07
LS125-20	88	0.86
LS125-40	88	0.84
LS125-80	88	0.9
LS125B/C1	89	0.826
LS140	47, 89	0.07
LS150-06	90	2.42
LS150-12	90	2.42
LS150-120	90	2.5
LS150-20	90	2.42
LS150-30	90	2.5
LS150-50	90	2.5
LS150-80	90	2.5
LS150B/C	91	1.91
LS150-C	47, 91	0.576
LS150-G	47, 91	0.03
LS150-GV	47, 91	0.03
LS180	47, 89	2.12
LS200-06	90	2.5
LS200-100	90	2
LS200-12	90	2.33
LS200-120	90	2

PART NO	PAGE NO(S)	WEIGHT
LS200-20	90	2.33
LS200-30	90	2.42
LS200-50	90	2.42
LS200-80	90	2.42
LS200B/C	91	2
LS206	47, 87, 91	0.3
LS2100	91	0.09
LS212	47, 87, 91	0.29
LS2120	47, 87, 91	0.08
LS220	47, 87, 91	0.2
LS230	47, 87, 91	0.188
LS250	47, 87, 91	0.13
LS250P	91	0.116
LS280	47, 87, 91	0.1
LS300EC	49, 93	0.626
LS304	49, 93	0.598
LS308	49, 93	1.106
LS312	49, 93	4.31
LS320	49, 93	1.03
LS350	49, 93	0.92
LS720	89	0.04
LS740	89	0.04
LS780	89	0.04
LSM300-04	92	8
LSM300-08	92	8
LSM300-12	92	8
LSM300-20	92	8
LSM300-50	92	8
LSQ200-06	86	4.17
LSQ200-20	86	4.17
LSQ200-30	86	4.17
LSQ200-50	86	4.17
LSQ200-80	86	4.17
LSQ200-B/C	87	3.63
LSQ200-C	87	1.74
LSQ200-G	87	0.05
LSQ200-PL	47, 49, 85, 87, 91	0.042
LSQ200-R	47, 49, 85	0.002
LSQ200R1	87	0.002
LSQ200-RV	87, 91	0.004
LSS300-BC	92, 93	23.88
LSS300-G	92, 93	0.1

PART NO	PAGE NO(S)	WEIGHT
LSS300-GV	92, 93	0.044
LSS300-H	93	1.724
LSS300-S	92, 93	0.032
LSS300-SV	92, 93	0.05
LSS306	93	0.198
LSS308	93	0.256
LSS312	93	0.37
LSS320	93	0.4
LSS330	93	0.368
LSS350	93	0.366
LST075-100	84	0.83
LST075-16	84	0.824
LST075-30	84	0.84
LST075-50	84	0.84
LST075-80	84	0.83
LST075-H	85	0.516
LST075-HB	85	0.738
LST100-100	84	0.76
LST100-16	84	0.78
LST100-30	84	0.79
LST100-50	84	0.81
LST100-80	84	0.78
LST100-B	47, 85	2.17
LST100-G	47, 85	0.02
LST100-GV	47, 85	0.02
LST100-H	85	0.472
LST100-HB	85	2.25
LST1100	47, 85	0.07
LST116	47, 85	0.084
LST125-16	84	2.032
LST125-30	84	2.22
LST125-50	84	2.24
LST125-80	84	2.18
LST125-HB	85	1.846
LST130	47, 85	0.07
LST150	47, 85	0.07
LST150-100	84	1.9
LST150-30	84	2.12
LST150-50	84	2.15
LST150-80	84	2.13
LST150-B	47, 85	0.22
LST150-G	47, 85	0.014

PART NO	PAGE NO(S)	WEIGHT
LST150-GV	47, 85	0.024
LST150-HB	85	1.794
LST15100	47, 85	0.27
LST1516	47, 85	0.196
LST1530	47, 85	0.17
LST1550	47, 85	0.15
LST1580	47, 85	0.1
LST180	47, 85	0.07
LST200-10SS	86	16
LST200-50SS	86	16
LST200-B	87	1.946
LST200-GV	87	0.04
LST200-HSS	87	1.614
LST204SS	49, 87	0.416
LST206SS	49, 87	0.382
LST208SS	49, 87	0.326
LST2100SS	49	0.45
LST210SS	49, 87	0.48
LST216SS	49, 87	0.27
LST230SS	49, 87	0.49
LST250SS	49, 87	0.49
LST280SS	49, 87	0.48
LST5100	83	0.016
LST530	83	0.05
LST550	83	0.024
LST580	83	0.02
LSTM050-30	82	0.76
LSTM050-30C	82	0.324
LSTM050-50	82	0.3
LSTM050-50C	82	0.76
LSTM050-80	82	0.76
LSTM050-80C	82	0.316
LSTM050B	83	0.103
LSTM050BC	83	0.12
LSTM050G	83	0.02
LSTM050H	83	0.176
LSTM075-30	82	0.76
LSTM075-30C	82	0.31
LSTM075-50	82	0.288
LSTM075-50C	82	0.308
LSTM075-80	82	0.76
LSTM075-80C	82	0.302

PART NO	PAGE NO(S)	WEIGHT
LSTM075H	83	0.161
LV025MTV	6	0.06
LV025V	6	0.054
LV038050MTLV	6	0.07
LV038050MTV	6	0.058
LV038MTV	6	0.07
LV038V	6	0.07
LV050100MTLV	6	0.125
LV050100MTV	6	0.11
LV050MTV	6	0.096
LV050SLLV	6	0.12
LV050SLV	6	0.08
LV050V	6	0.084
LVHB038050MTV	6	0.064
LVHB038V	6	0.06
LVHB050V	6	0.06
LVHB-075100MTLV	6	0.135
LVHB075100MTV	6	0.13
LVHB075MTV	6	0.13
LVHB075V	6	0.118
LVPL025V	6	0.06
LVPL038V	6	0.06
M100050FPT	42	0.06
M100050HBT	44	0.086
M100075BRB	44	0.06
M100075BRB90	44	0.06
M100075FPT	42	0.05
M100075HBT	44	0.1
M100075MPT	42	0.052
M100100HBT	44	0.09
M100125BRB	44	0.08
M100125BRB90	44	0.11
M100125BRBSWP90	39	0.15
M100125MPT	42	0.114
M100150BRB90	44	0.17
M100A	43	0.07
M100BRB	44	0.066
M100BRB45	44	0.074
M100BRB90	44	0.08
M100BRBSWP90	39	0.145
M100BRBSWPG90	39	0.15
M100CPG	40	0.09

PART NO	PAGE NO(S)	WEIGHT
M100CPG45	40	0.09
M100CPG90	41	0.14
M100CR	43	0.24
M100FPT	42	0.09
M100G	45	0.02
M100GV	45	0.02
M100MPT	42	0.08
M100MPTSS	42	0.34
M100PA	36	0.25
M100PAC	36	0.32
M100PAT	36	0.65
M100PLG	43	0.05
M100PLG025	43	0.04
M100PLG050	43	0.04
M100SWFSS	40	0.32
M100SWP90	39	0.126
M100SWPG90	39	0.13
M100TEE	41	0.2
M101G	45	0.006
M101TEE	41	0.23
M102G	4, 45	0.01
M12712	105, 107	N/A
M13712	111, 117	4.588
M19712X	139, 141	27.046
M200100BRB	44	0.15
M200100BRB90	44	0.16
M200100CPG	41	0.16
M200100TEE	41	0.525
M200125BRB	44	0.16
M200125BRB45	44	0.18
M200125BRB90	44	0.21
M200125MPT	42	0.2
M200125MPTSS	42	0.2
M200150BRB	44	0.17
M200150BRB45	44	0.17
M200150BRB90	44	0.21
M200150BRBSWP90	39	0.431
M200150FPT	42	0.344
M200150MPT	42	0.23
M200150MPTSS	42	0.23
M200A	43	0.24
M200BRB	44	0.24

PART NO	PAGE NO(S)	WEIGHT
M200BRB45	44	0.262
M200BRB90	44	0.34
M200CPG	40	0.43
M200CPG45	40	0.31
M200CPG90	41	0.626
M200CPG90SH	41	0.423
M200CR	43	0.692
M200FPT	42	0.29
M200MPT	42	0.26
M200MPTSS	42	0.81
M200PLG	43	0.12
M200PLG025	43	0.084
M200PLG038	43	0.09
M200PLG050	43	0.09
M200PLG075	43	0.1
M200PLG100	43	0.11
M200SWFSS	40	0.68
M200SWP90	39	0.365
M200TEE	41	0.611
M201G	45	0.05
M202G	4, 45	0.025
M220100BRB	44	0.15
M220100CPG	41	0.15
M220100TEE	41	0.403
M220125BRB	44	0.16
M220150BRB	44	0.16
M220150BRB90	44	0.211
M220150MPTSS	42	0.65
M220200CPG	41	0.2
M220200HBT	44	0.39
M220200SWP90	39	0.356
M220200TEE	41	0.567
M220375SWFSS	40	1.35
M220A	43	0.2
M220ASWP90	39	0.399
M220BRB	44	0.19
M220BRB45	44	0.225
M220BRB90	44	0.309
M220BRBSWP90	39	0.399
M220BWASS	42	0.5
M220CPG	40	0.21
M220CPG3G	40	N/A

PART NO	PAGE NO(S)	WEIGHT
M220CPG45	37, 40	0.24
M220CPG6	37, 40	0.375
M220CPG90	41	0.341
M220CR	43	0.578
M220D	43	0.73
M220FPT	42	0.26
M220MPT	42	0.21
M220MPTSS	42	0.62
M220MPTSWP90	39	0.331
M220P6PRO	104	N/A
M220PH5	104	55
M220PH5W	106	55
M220PH6	104	55
M220PLG	43	0.12
M220PLG038	43	0.1
M220PLG075	43	0.11
M220PO	104	8.372
M220SWFSS	40	0.58
M220SWP90	39	0.286
M220SWPG90	39, 41	N/A
M220TEE	41	0.522
M220Y45	37, 41	1.316
M220YG45	37, 41	1.34
M221G	37, 45	0.03
M221GSA	40	0.258
M222G	4, 45	0.03
M300200CPG	41	0.267
M300220BRB	44	0.284
M300220BRB90	44	0.406
M300220CPG	37, 41	0.245
M300220MPTSS	42	1.332
M300220SWP90	39	0.571
M300300HBT	44	1.034
M300375SWFSS	40	3.2
M300A	43	0.35
M300ASWP90	39	0.897
M300BRB	44	0.478
M300BRB45	44	0.518
M300BRB90	44	0.798
M300BRBSWP90	39	1.184
M300CPG	40	0.417
M300CPG12	40	1.01

PART NO	PAGE NO(S)	WEIGHT
M300CPG45	37, 40	0.518
M300CPG7	37, 40	0.632
M300CPG90	41	0.745
M300CR	43	1.215
M300FPT	42	0.514
M300MPT	42	0.437
M300MPTSS	42	1.85
M300MPTSWP90	39	0.833
M300P11PRO	110	N/A
M300PB	110	N/A
M300PH6	110	45.4
M300PH6W	116	49
M300PLG	43	0.25
M300PLG075	43	0.23
M300PLG100	43	0.248
M300PO	110	9.792
M300POW6	116	16.24
M300SWFSS	40	1.46
M300SWP90	39	0.675
M300SWPG90	39	0.75
M300TEE	41	1.111
M300Y45	37, 41	3.32
M300YG45	37, 41	3.258
M301G	37, 45	0.03
M301GSA	40	0.55
M302G	4, 45	0.05
M303D	43	1.5
M305PHYW	116	26.4
M332PIE101W	138	270
M332PIE10W	138	N/A
M332PIH13W	138	155
M332PIHAW	140	N/A
M332PIHYW	140	190
M332POIW	138	70.532
MBF100	50	0.9
MBF100BD	50	0.948
MBF200	50	1.37
MBF200BD	50	1.44
MBF220	50	1.62
MBF220BD	50	1.62
MBF300	50	2.34
MBF300BD	50	2.5

PART NO	PAGE NO(S)	WEIGHT
MBP200	62	0.26
MCV100	40	0.154
MCV200	40	0.45
MCV221	40	0.5
MCV300	40	1.224
MCV301	40	1.26
MEVX100	24	3.82
MEVX100BL	27	4.7
MEVX100SL	27	4.7
MEVX101	24	4.24
MEVX1012	28	9.6
MEVX1013	28	14.548
MEVX1014	28	19.485
MEVX102	28	9.073
MEVX103	28	14.47
MEVX200	25	4.22
MEVX200BL	27	N/A
MEVX200SL	27	N/A
MEVX201	25	4.775
MEVX220BL	27	6.98
MEVX220SL	27	N/A
MEVX221	25	4.775
MEVX300	26	8.98
MEVX300BL	27	N/A
MEVXR100	24	2.491
MEVXR100SL	27	4.7
MEVXR101	24	3.82
MEVXR200	25	2.882
MEVXR200SL	27	3.979
MEVXR220	25	3.405
MEVXR220SL	27	6.627
MEVXR300	26	8.98
MFM100	38	2.75
MFM220	38	2.75
MFM300	38	5.4
MHV200	36	0.57
MHV220A	36, 37	0.8
MIS220	37	10.175
MIS300	37	23.06
MLEV100	28	0.65
MLEV100A	28	1.13
MLEV100C	28	N/A

PART NO	PAGE NO(S)	WEIGHT
MLS100-80	46	0.88
MLS100B	47	0.646
MLS100BC	47	0.896
MLS200-06	46	2.25
MLS200-12	46	2.5
MLS200-20	46	2.15
MLS200-30	46	2.15
MLS200-50	46	3.9
MLS200-80	46	2.15
MLS200B	47	1.526
MLS200BC	47	2.07
MLS2100SS	49	0.54
MLS220C1	49	0.82
MLS220G1	49	0.008
MLS220R1	49	0.417
MLS222-04	48	3.82
MLS222-10	48	3.5
MLS222-16	48	3.7
MLS222-30	48	3.75
MLS222-50	48	3.75
MLS222-80	48	3.7
MLS222B	49	2.2
MLS222BC	49	3.25
MLS250SS	49	0.6
MLS280SS	49	0.57
MLS300-12	48	8
MLS300-20	48	8
MLS300-50	48	8.44
MLS300B	49	5.01
MLS300B1	93	5.357
MLS300BC	49	7.48
MLS300CAP	49, 93	1.36
MLS300ECG	49, 93	0.024
MLS300ECGV	49, 93	0.04
MLS300G	49, 93	0.03
MLST100-100	46	0.75
MLST100-30	46	0.75
MLST100-50	46	0.75
MLST100-80	46	0.75
MLST100-H	47	0.467
MLST100-HB	47	0.63
MLST150-100	46	2

PART NO	PAGE NO(S)	WEIGHT
MLST150-30	46	2
MLST150-50	46	2
MLST150-80	46	2
MLST150-80V	46	2.125
MLST150-H	47	1.292
MLST150-HB	47	1.75
MPRV100-050	35	1.506
MPRV100-075	35	1.45
MPRV100-100	35	1.5
MPRV100-125	35	1.54
MSUV100FP	15	0.46
MSW220	40	0.4
MTF220BD	50	0.75
MTF300BD	50	2.092
MV100BL	34	1.2
MV100CF	29	0.75
MV100SL	34	1.13
MV200BL	34	2
MV200CF	29	2.024
MV200SL	34	2
MV220BL	34	4.63
MV220CF	29	2.798
MV220SL	34	2.75
MV225CF	29	7.3
MV300	29	3.9
MV300BL	34	6.68
MV300CF	29	5.866
MV301CF	37	6
MVS220CF	30, 37	1.744
MVS220FP	30	1.804
MVS300CF	32	3.046
MVS300CFFP	32	3.75
MVS300HSFP	33	6.32
MVSF220FP	30	1.78
MVSF300	32	3.29
MVSF300FP	32	4
MVSMT220FP	30	1.75
MVSMT300	32	3.192
MVSMT300HSFP	33	6.44
NIP025-SH	77	0.01
NIP038-SH	77	0.02
NIP050-3	77	0.04

PART NO	PAGE NO(S)	WEIGHT
NIP050-SH	77	0.02
NIP075-4	77	0.074
NIP075-6	77	0.12
NIP075-SH	77	0.03
NIP100-4	77	0.09
NIP100-6	77	0.14
NIP100-SH	77	0.038
NIP125-4	77	0.136
NIP125-6	77	0.22
NIP125-SH	77	0.06
NIP150-3	77	0.14
NIP150-4	77	0.22
NIP150-5	77	0.26
NIP150-6	77	0.34
NIP150-SH	77	0.12
NIP200-4	77	0.25
NIP200-6	77	0.38
NIP200-SH	77	0.14
NIP2101	62	0.3
NIP300-4	77	0.434
NIP300-6	77	0.696
NIP300-SH	77	0.307
PLUG025	78	0.03
PLUG038	78	0.02
PLUG050	78	0.02
PLUG075	37, 78	0.04
PLUG100	78	0.06
PLUG125	78	0.09
PLUG150	78	0.1
PLUG200	78	0.152
PLUG300	78	0.445
PV075	16	0.53
PV100	16	0.52
PV100-075	16	0.64
PV100-075V	16	0.35
PV10265	16	0.07
PV10265V	16	0.2
RB038-025	77	0.01
RB050-025	77	0.02
RB050-038	77	0.01
RB075-025	77	0.04
RB075-038	77	0.03

PART NO	PAGE NO(S)	WEIGHT
RB075-050	77	0.03
RB100-025	77	0.07
RB100-050	77	0.05
RB100-075	77	0.04
RB125-075	77	0.09
RB125-100	77	0.06
RB150-075	77	0.12
RB150-100	77	0.1
RB150-125	77	0.1
RB200-075	77	0.18
RB200-100	77	0.17
RB200-125	77	0.14
RB200-150	77	0.12
RB300-150	77	0.415
RB300-200	77	0.359
RB400-300	77	1.032
RC100-075	77	0.15
RC150-100	77	0.2
RC150-125	77	0.206
RC200-050	77	0.28
RC200-100	77	0.26
RC200-125	77	0.26
RC200-150	77	0.26
RC300-200	77	0.624
RN050-038	77	0.018
RN075-050	77	0.03
RN100-050	77	0.06
RN100-075	77	0.06
RN125-075	77	0.086
RN125-100	77	0.08
RN150-100	77	0.122
RN150-125	77	0.14
RN200-125	77	0.16
RN200-150	77	0.17
RN300-200	77	0.365
RS21	81	0.756
RSTB	81	0.704
SL025-90	79	0.02
SL038-90	79	0.03
SL050-90	79	0.06
SL075-45	79	0.07
SL075-90	79	0.08

PART NO	PAGE NO(S)	WEIGHT
SL100-45	79	0.1
SL100-90	79	0.13
SL125-45	79	0.14
SL125-90	79	0.14
SL150-45	79	0.22
SL150-90	79	0.25
SL200-45	79	0.34
SL200-90	79	0.41
SL300-45	79	0.833
SL300-90	79	1.054
ST200	63	0.809
ST300	63	1.332
SUV050FP	15	0.25
SUV075FP	15	0.4
SUV100FP	15	0.4
SUV125FP	15	0.88
SUV150FP	15	0.88
SUV200FP	15	1.45
SW100	81	0.16
SW150	81	0.36
SW220	81	0.52
TA283	64	0.2
TA283QD	64	0.3
TC120	76	0.1
TC130	76	0.1
TC150	76	0.11
TC162	76	0.12
TC181	76	0.14
TC193	76	0.12
TC206	76	0.14
TC218	76	0.13
TC224	76	0.14
TC231	76	0.15
TC250	76	0.16
TC287	76	0.17
TC312	76	0.16
TC331	76	0.17
TC343	76	0.17
TC425	76	0.18
TC438	76	0.36
TC456	76	0.38
TEE025	78	0.02

PART NO	PAGE NO(S)	WEIGHT
TEE038	78	0.05
TEE050	78	0.1
TEE075	78	0.14
TEE100	78	0.21
TEE125	78	0.32
TEE150	78	0.445
TEE200	78	0.584
TEE300	78	1.594
TEG075	78	0.14
TEG100	78	0.22
TF038SS	67	0.25
TF050	67	0.25
TF050SS	67	0.8
TF075	67	0.2
TF075SS	67	1.15
TF075V	67	0.22
TF100	67	0.35
TF100AV	68	0.44
TF100SS	67	2.85
TF125	67	0.35
TF125AV	68	0.386
TF125SS	67	1.92
TF138GV	67	0.1
TF150	67	0.63
TF150AV	68	0.68
TF150SS	67	4.88
TF200	67	0.55
TF200AV	68	0.596
TF200SS	67	3.6
TF200V	67	0.56
TF220	67	0.82
TF220G	67	0.038
TF220SS	67	5.27
TF300	67	2
TF300G	67	0.094
TF300SS	67	7.9
TF400	67	4.5
TF400G	67	0.7
TF400GV	67	0.752
TL600C	63	0.46
TL650S	63	0.5
TL651S	63	0.7

PART NO	PAGE NO(S)	WEIGHT
TL652E	63	0.64
TL652S	63	0.63
TL6531	64	0.084
TLVA10	63	2.25
TM075/050	81	0.16
UB100	41	0.24
UB202	41	0.26
UB220	41	0.32
UV050FP	15	0.25
UV075FP	15	0.25
UV100FP	15	0.37
UV125FP	15	1
UV150FP	15	1
UV15163	47, 85, 89, 97, 99, 101, 103, 107, 115, 117, 119, 121, 123, 125, 131, 133, 135, 139, 141	0.002
UV15163V	89, 97, 101, 115, 145, 147, 149, 151	0.002
UV200FP	15	1.5
UV204FPFD	62	1.58
V050	7	0.75
V07018	97, 99, 101, 103, 105, 107, 109, 111, 113, 115, 117	0.1
V07019	97, 99, 101, 103, 105, 107, 109, 111, 113, 115, 117	0.008
V075	7	0.75
V075BL	13	1.35
V075SL	13	1.35
V100	7	0.682
V100BL	13	1.25
V100FP	7	1.16
V100SL	13	1.31
V10117	141	0.1
V10118	119, 121, 123, 125, 127, 129, 139, 141, 145, 147, 149, 151	0.004
V10119	101, 119, 121, 123, 125, 127, 139, 145, 147, 149, 151	0.1
V10153138	7	0.07
V10161	14	0.176
V10264	143	0.002
V10270	7	0.138
V10271	7	0.14
V125	7	1.25
V125BL	13	2.126
V125FP	7	1.91
V125SL	13	2.07
V150	7	1.87
V150BL	13	2
V150SL	13	2

PART NO	PAGE NO(S)	WEIGHT
V200	7	1.88
V20018	101, 103, 113, 123, 125, 129, 131, 133, 135, 137, 143, 147, 149, 151	0.004
V20019	129, 131, 133, 135, 151	0.016
V200BL	13	2.8
V200FP	8	3.25
V200SL	13	2.75
V20153138	7	0.176
V20207	64, 73	0.006
V204FP	9	2.74
V25153138	7	0.16
V25270	7, 8	0.194
V25271	7, 8	0.356
V300	8	3.75
V300FP	8	5.67
V400	8	8.5
VA150	14	2.592
VA200	14	2.8
VA200FP	14	3.958
VC200	68	0.219
VC230	68	0.26
VC300	68	0.54
VC330	68	0.68
VFMT200FP	8	3.368
VFMT204FP	9	3.33
VL20153	7	0.35
VL25153	8	0.41
VN100	14	0.712
VS204FP	11	1.834
VSBHB204FP	5	2.675
VSBHB205FP	5	2.965
VSBHB304FP	5	5.1
VSBHB305FP	5	5.52
VSF200	10	1.25
VSF200CF	30	1.49
VSF200FPAF	9	3.05
VSF204FP	11	1.82
VSF300	12	3.424
VSFHB200	10	1.52
VSFMT200	10, 12	1.562
VSFMT204FP	11	1.862
VSFMT204HSFP	11	2.95
VSFMT300	12	3.374

PART NO	PAGE NO(S)	WEIGHT
VSFMT300FP	12	4.29
VSFMT300HSFP	12	6.63
VSMT200	10, 12	1.35
VSMT200CF	30	1.432
VSMT204FP	11	1.874
VSMT300	12	3.27
VSS025	16	0.634
VSS038	16	0.59
VSS050	16	0.7
VSS075	16	1.298
VSS100	16	2.094
VSS150	16	3.996
VSS200	16	6.808
VSS300	16	18.43
W230237	61	1.07
W230238	61	1.17
W230239	61	1.07
W230240	61	1.1
WSF210FSA	61	1.2
WSF210FSAV	61	1
WSMT210FSA	61	1.07
WSMT210FSAV	61	1

CATALOG #04 2023

BANJO LIQUID HANDLING PRODUCTS

BANJO
Liquid Handling Products

BANJO CORPORATION
A Unit of IDEX Corporation
150 Banjo Drive
Crawfordsville, IN 47933 U.S.A.
Telephone: (765) 362-7367
Fax: (765) 362-0744
banjocorp.com
#yellowhandle

Follow us on:

Scan to visit
BanjoCorp.com